ELE 361

Konu 3: Kipleme ve Kipçözümü

3.2 Giriş

- İletilecek sinyalin , iletim ortamının karakteristiklerine uygun hale getirilmesi gerekir (kipleme)
- Kanaldan geçen (ve bozulan) sinyalin alıcıda kipçözümüne tabi tutulması ve bilginin karşıda minimum hata veya bozulma ile geri elde edilmesi gerekir
- Kanal başka kullanıcılar/iletimler ile paylaşılabilir
- Ör. Mesaj sinyali: $m(t) = A_m \sin(\omega_m t + \phi_m)$ (ton)
  - Ör. 1000 Hz
- Taşıyıcı sinyal $\mathrm{x_c}(t) = A_c \sin(\omega_c t + \phi_c)$
  - Ör. 160Mhz
- Mesaj sinyali taşıyıcı sinyalin üzerine bir şekilde bindirilmeli
  - Nasıl?

3.3 : Ön Bilgiler

- Trigonometri
  - Sin cos
  - Pisagor
  - Açı toplamı formülleri
  - Çarpım formülleri

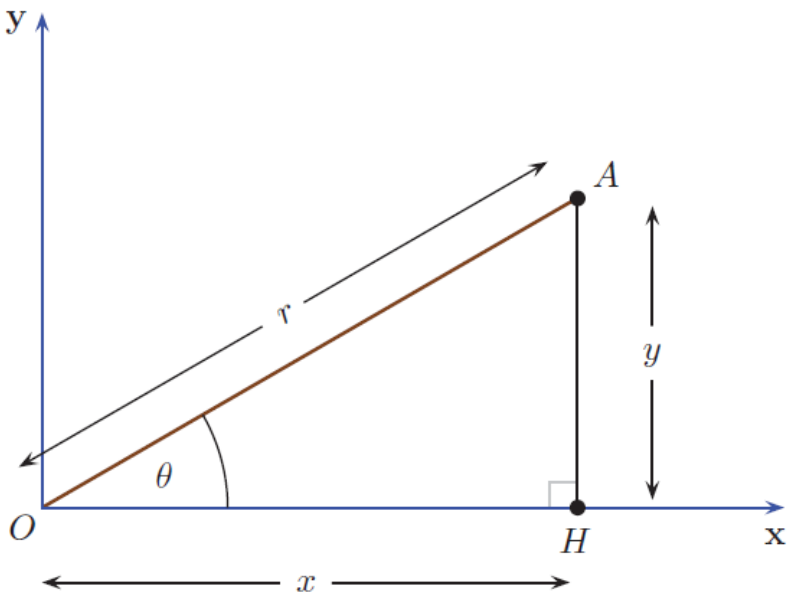

Table 3.1 Summary of useful trigonometric formulas.

$\sin(\alpha+\beta)$	$=$	$\sin\alpha\cos\beta+\cos\alpha\sin\beta$
$\sin(\alpha-\beta)$	$=$	$\sin\alpha\cos\beta-\cos\alpha\sin\beta$
$\cos\alpha+\beta)$	$=$	$\cos\alpha\cos\beta-\sin\alpha\sin\beta$
$\cos(\alpha-\beta)$	$=$	$\cos\alpha\cos\beta+\sin\alpha\sin\beta$
$\sin\alpha\sin\beta$	$=$	$[\cos(\alpha-\beta)-\cos(\alpha+\beta)]/2$
$\cos\alpha\cos\beta$	$=$	$[\cos(\alpha-\beta)+\cos(\alpha+\beta)]/2$
$\sin\alpha\cos\beta$	$=$	$[\sin(\alpha+\beta)+\sin(\alpha-\beta)]/2$
$\cos\alpha\sin\beta$	$=$	$[\sin(\alpha+\beta)-\sin(\alpha-\beta)]/2$
$\sin 2\theta$	$=$	$2\sin\theta\cos\theta$
$\cos 2\theta$	$=$	$\cos^2\theta-\sin^2\theta$
$\sin^2\theta$	$=$	$(1-\cos 2\theta)/2$
$\cos^2\theta$	$=$	$(1+\cos 2\theta)/2$

3.3.2 Karmaşık Sayılar

- Sinüzoidal sinyalin bir genliği ve fazı vardır
- Karmaşık sayının da bir genliği ve fazı vardır
- Sinüzoidal sinyallar karmaşık sayılarla ifade edilebilir
- $j = \sqrt{-1}$
- $p = x + jy$
- Gerçel, karmaşık kısımlar
- Mutlak değer
- Açı
- Euler (kutupsal) gösterimi
- $j =$

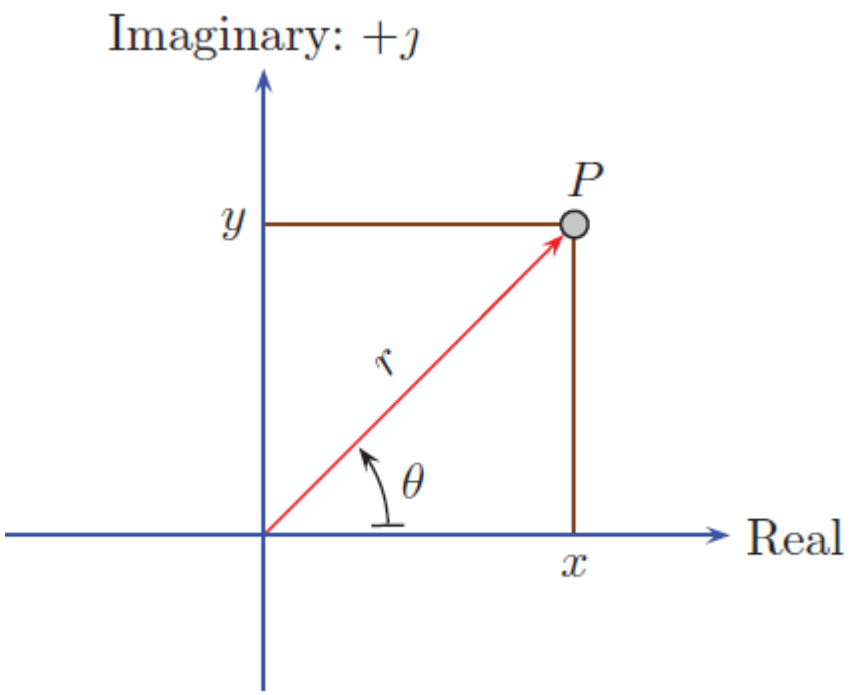

3.3.2 Karmaşık Sayılar

- Çarpım $P = 1 + j1$

- Kutupsal gösterimde çarpım (büyüklükler çarpılır, açılar toplanır)

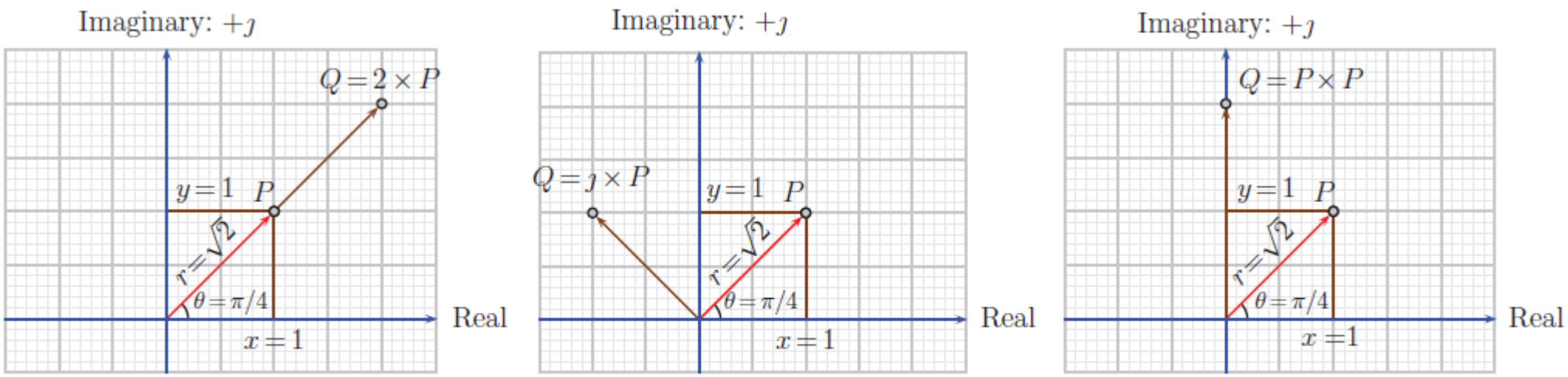

Figure 3.3 Multiplying the point $P = (1 + \jmath 1)$ by another complex number. From left to right: $P \times (2 + \jmath 0) = (2 + \jmath 2)$, $P \times (0 + \jmath 1) = (-1 + \jmath 1)$, and $P \times (1 + \jmath 1) = (0 + \jmath 2)$.

3.4 Kiplemeye Neden İhtiyaç Var?

- Mesaj sinyalini yüksek bir frekansa taşımak
  - Upconversion/downconversion
- En basit yöntem: Mesaj ve taşıyıcı sinyalini çarpmak
  - $m(t) = A_m \cos(\omega_m t + \phi_m)$
  - $\mathrm{x_c}(t) = A_c \cos(\omega_c t + \phi_c)$
  - $m(t)\mathrm{x_c}(t) = A_m A_c \cos(\omega_m t + \phi_m) \cos(\omega_c t + \phi_c)$
  - …

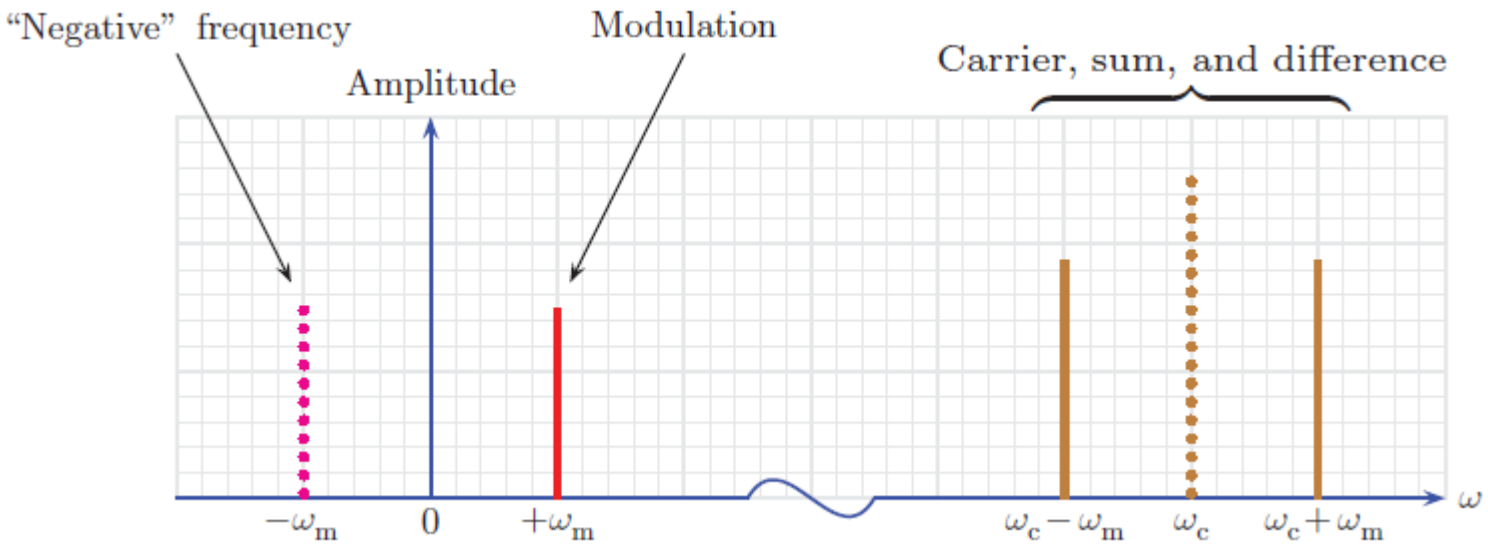

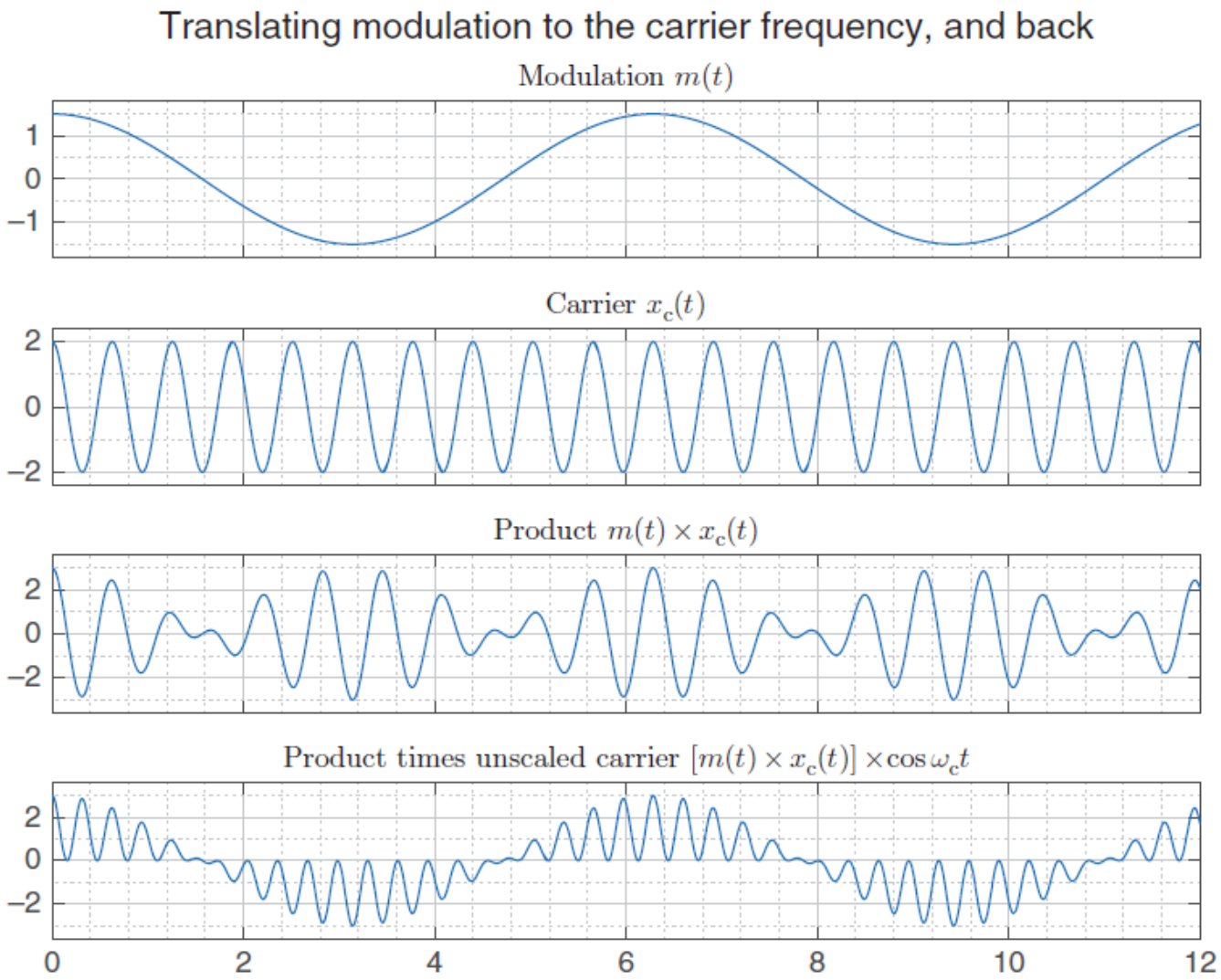

Figure 3.4 Converting a lower-frequency signal $m(t)$ up in frequency using multiplication by a much higher signal $x_c(t)$, and back down again, also via multiplication. The final result (lower panel) may be filtered to remove the high-frequency component, effectively leaving just the envelope, which is essentially the original $m(t)$ waveform.

3.4 Kipçözümü

- Kiplenmiş sinyal $m(t)\mathrm{x_c}(t) = A_m A_c \cos(\omega_m t + \phi_m)\cos(\omega_c t + \phi_c)$
- Alıcıda tekrar aynı taşıyıcı sinyal ile çarpılır (yerel osilatör)

- Daha sonra alçak geçirgen filtreden geçirilir

- Yerel osilatör
  - Frekansta kayma olabilir
  - Fazda kayma olabilir

- Bu en basit yöntem her zaman en doğru seçim midir?

Fazda kayma olursa?

3.5 Genlik Kiplemesi

- Yerel osilatör taşıyıcı ile aynı frekans ve fazda olmalı.
- Bunu sağlamanın yolu?
- $x_{AM}(t) = m(t)\cos(\omega_c t) + A_c \cos(\omega_c t)$
  - Kiplenmiş sinyal ile taşıyıcı sinyalini beraber iletmek
- $x_{AM}(t) = A_m \cos(\omega_m t)\cos(\omega_c t) + A_c \cos(\omega_c t)$
- Kipleme indeksi $\mu = \frac{A_m}{A_c}$

(a)

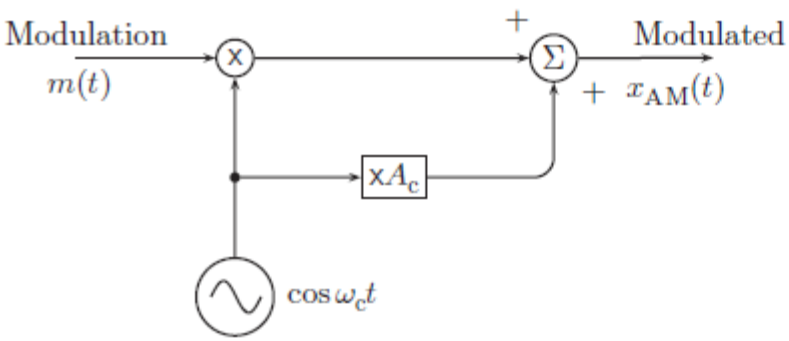

(b)

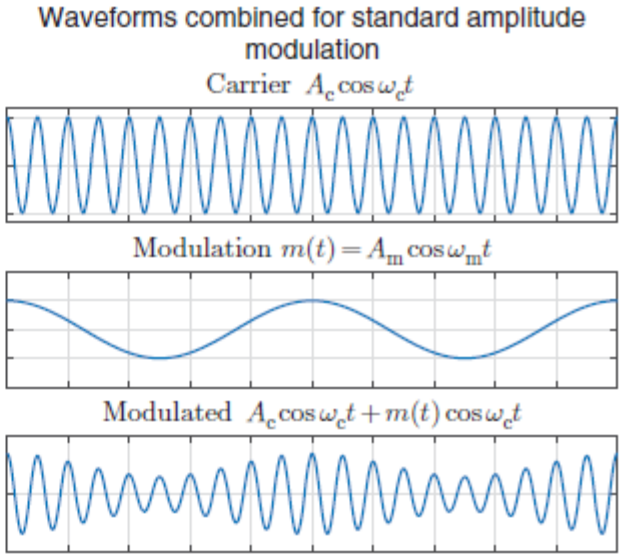

3.5 Genlik Kiplemesi

- Maks ve min değerler

3.5 Genlik Kiplemesi

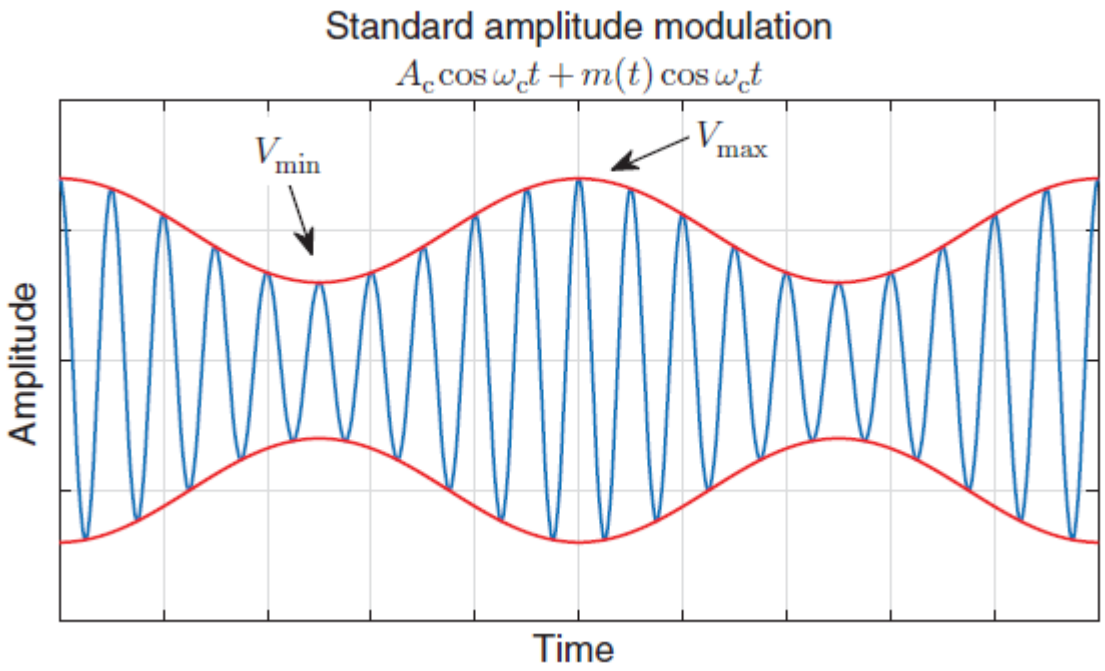

- $\mu =$
- $A_c =$
- $A_m =$

3.5.1 Frekans Bileşenleri

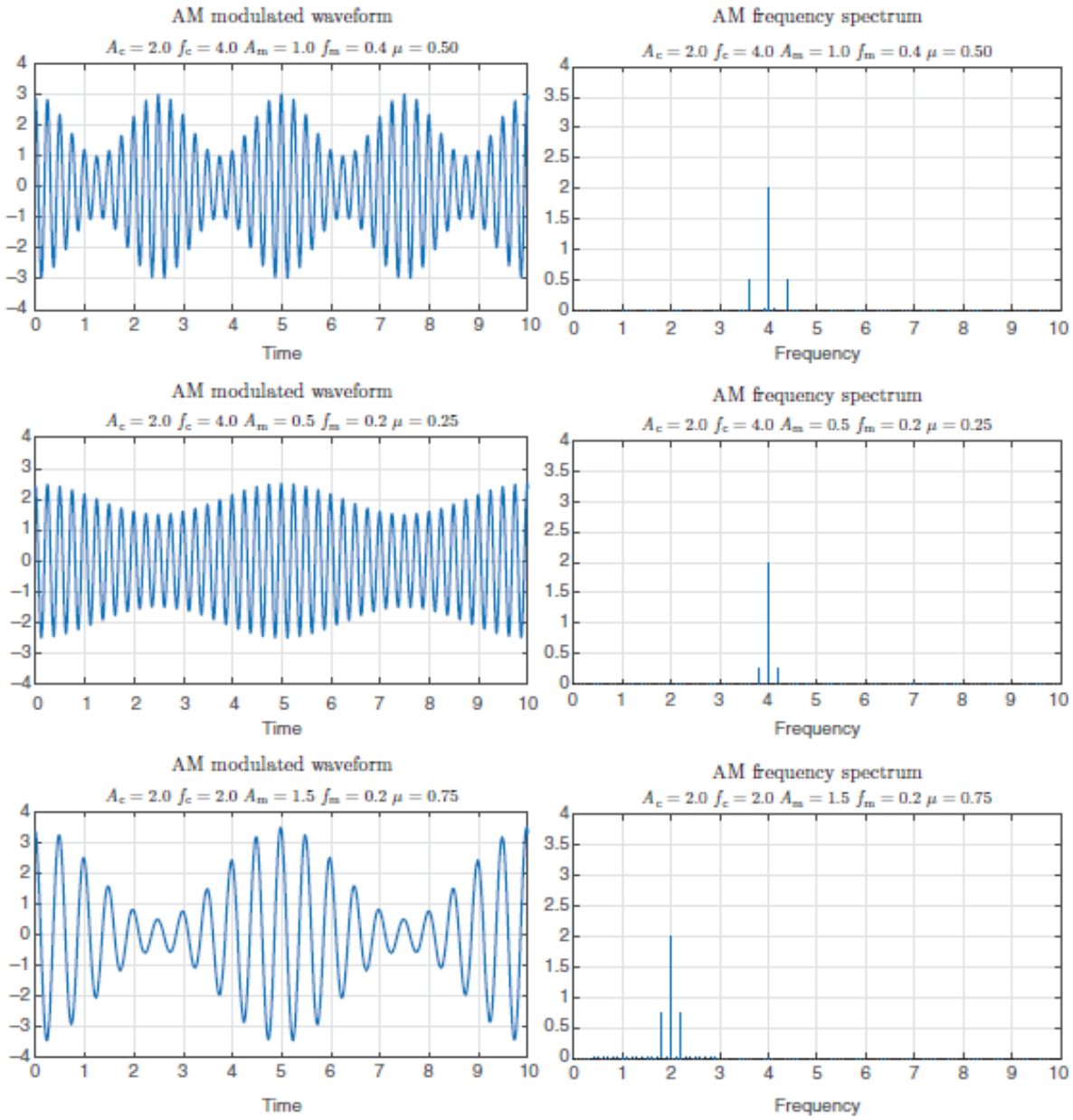

Figure 3.8 AM modulation showing time waveforms (left) and corresponding frequency spectra (right).

simpleAM.m

```
% time
N = 2*1024;
Tmax = 10 ;
dt = Tmax/(N-1);
t = 0:dt:Tmax;
% carrier
Ac = 2 ;
fc = 4;
wc = 2*pi*fc ;
xc = cos (wc*t ) ;
% modulation
Am = 0.5 ;
fm = 0.5 ;
wm = 2*pi*fm;
xm = cos(wm*t ) ;
% AM generation
mu = Am/Ac ;
xam = Am*xm.*xc+ Ac*xc ;
plot(t,xam);
xlabel('time s') ;
ylabel('amplitude') ;
```

```
% frequency
df = (1/dt ) ;
fam = abs(fft(xam)) ;
fam = fam /N*2 ;
f = [0:N-1]/N*df ;
K = 100;
k = 1:K;
maxfreq = (K/N)*df ;
% plot to frequency maxfreq using bars
figure
bar(f(k),fam(k));
axis([ 0 maxfreq 0 4 ] ) ;
grid('on') ;
xlabel('frequency Hz');
ylabel('amplitude');
```

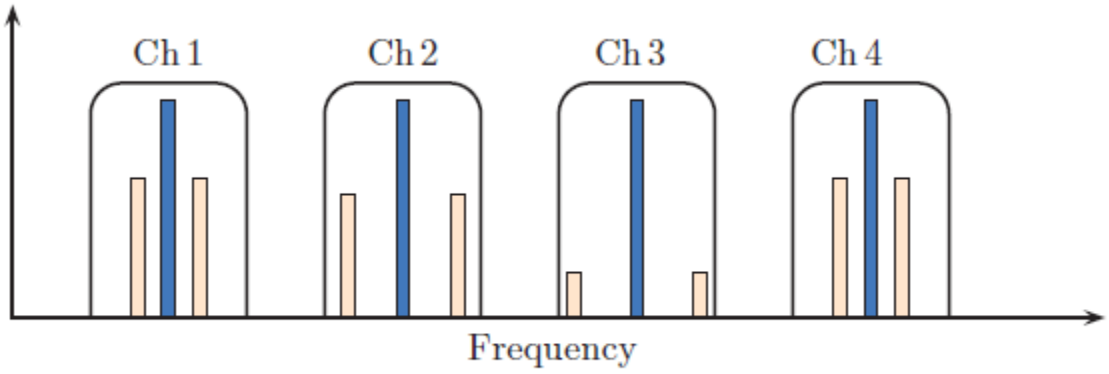

Figure 3.9 AM signal bandwidth and its effect on adjacent channels.

3.5.2 Güç Analizi

- Daha fazla güç, daha fazla kapsama alanı demektir
- Diğer yandan, daha fazla maliyet ve daha az pil ömrü demektir
- $x_{AM}(t) = m(t)\cos(\omega_c t) + A_c \cos(\omega_c t)$
- $P_{total} = \lim_{T\to\infty} \frac{1}{T}\int_{-\frac{T}{2}}^{\frac{T}{2}} x_{AM}^2(t)dt$
- $m(t) = A_m \cos(\omega_m t)$ ise
- $\eta = \frac{\mu^2}{2+\mu^2}$

3.5.3 AM Kipçözümü

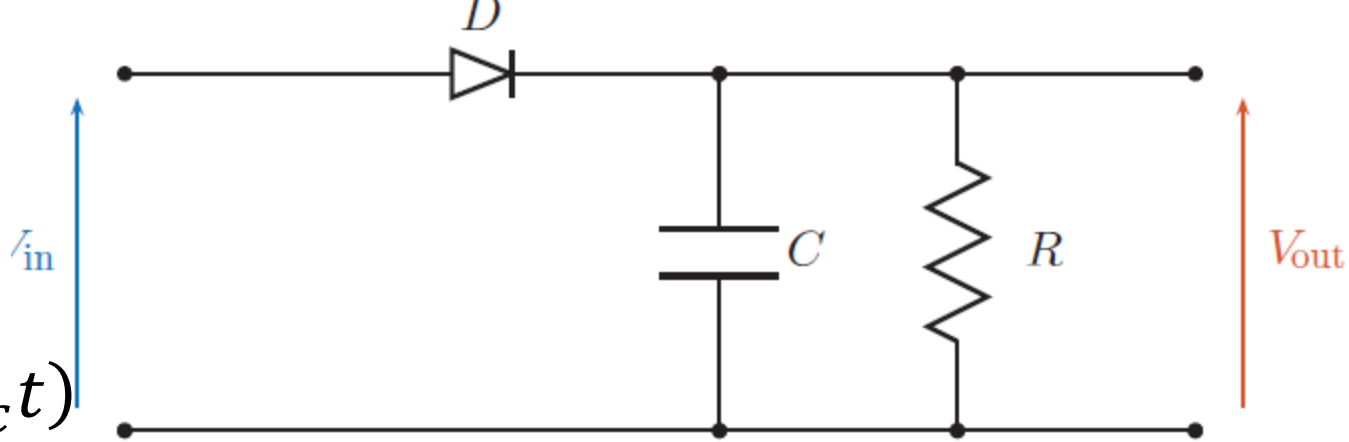

- $x_{AM}(t) = A_c(1 + \mu m_n(t))\cos(\omega_c t)$
- $x_{AM}(t) = A_c(1 + \mu \cos \omega_m t)\cos(\omega_c t)$
- Mesaj sinyalini veya yaklaşığını alıcıda elde etmek
- Envelope detector:

3.5.3 AM Kipçözümü

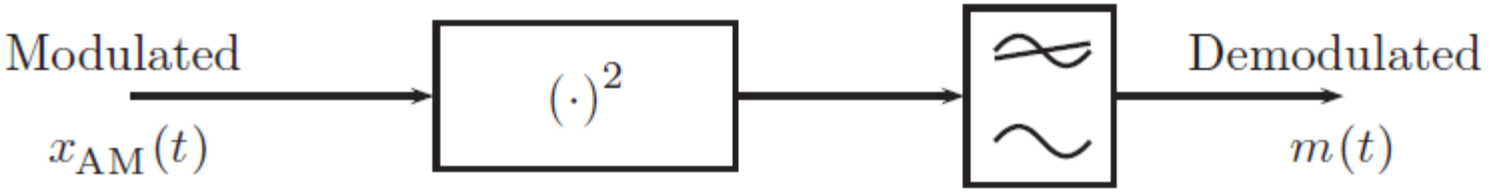

Figure 3.11 AM demodulation via squaring and first-order filtering.

- Diğer yöntem
- $x_{AM}(t) = A_c^2(1 + \mu \cos \omega_m t)^2 \cos^2(\omega_c t)$

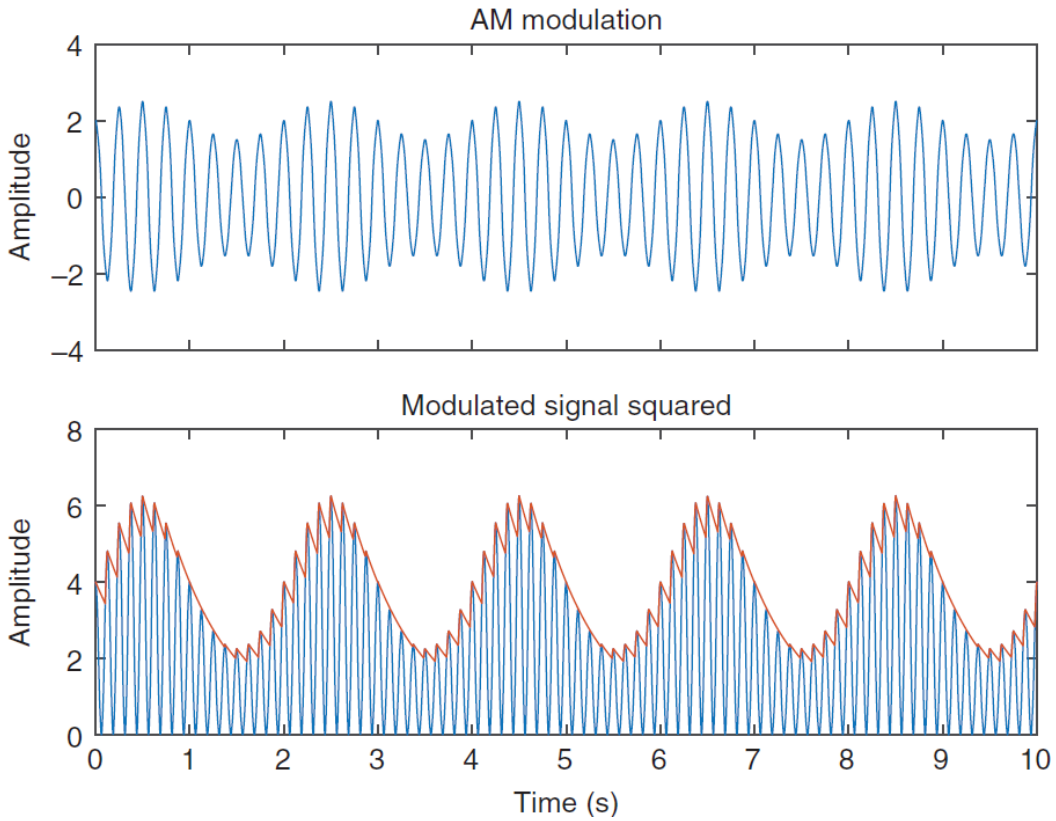

3.5.3 AM Kipçözümü

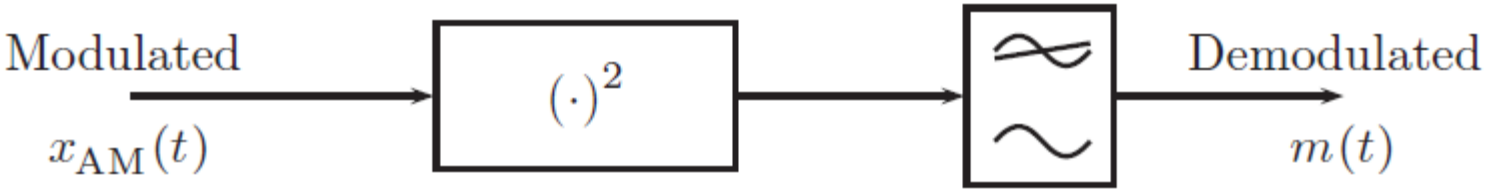

Figure 3.11 AM demodulation via squaring and first-order filtering.

- 3. yöntem
  - Senkron kipçözücü
- $x_{AM}(t) = A_c(1 + \mu m_n(t))\cos(\omega_c t)$
- $y_{AM}(t) = A_c(1 + \mu m_n(t))\cos(\omega_c t)\cos\omega_c t$

3.5.4 AM Varyasyonları

- DSBSC

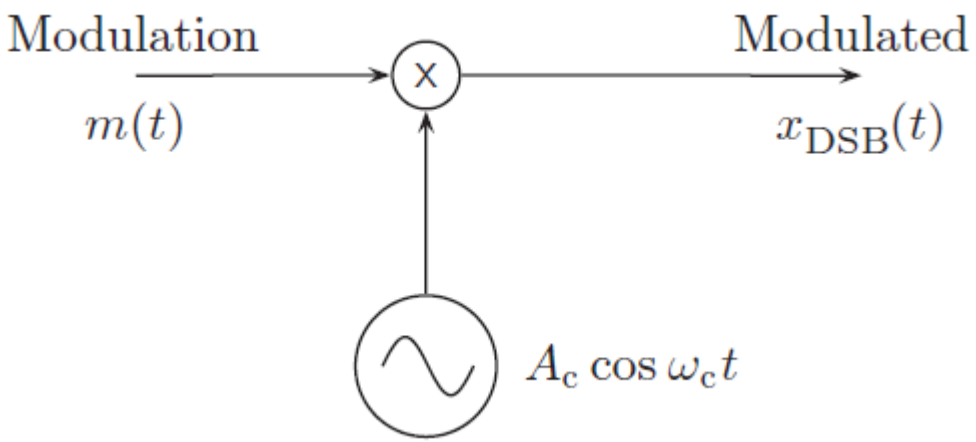

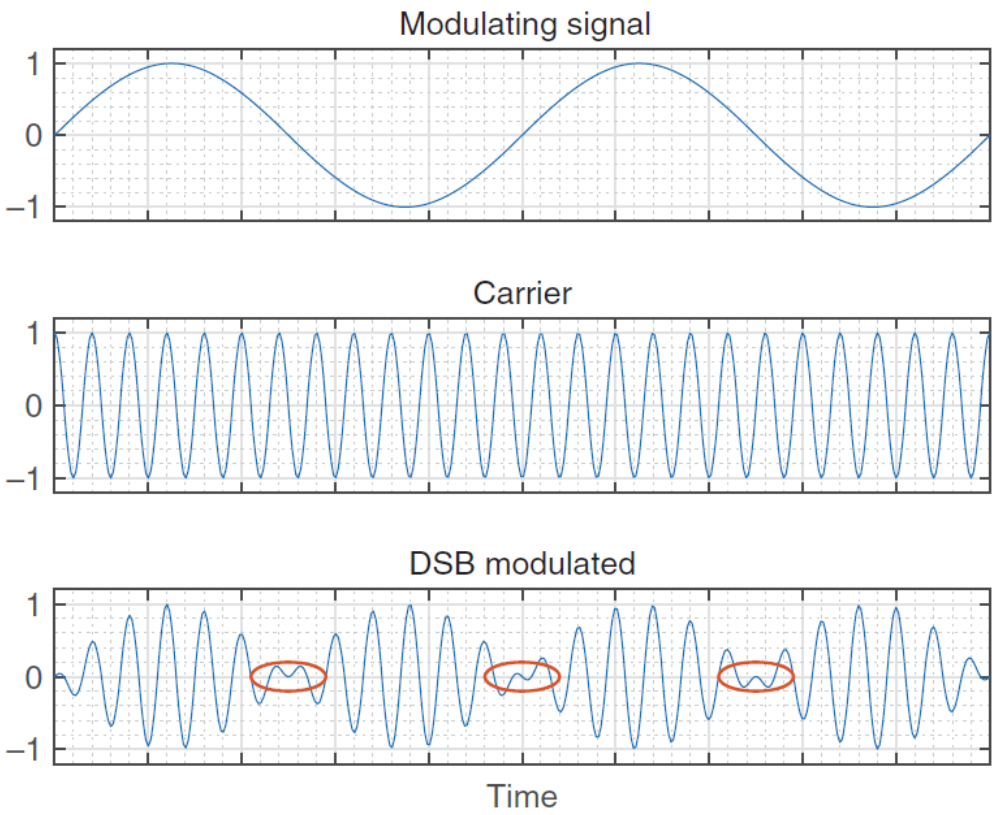

3.5.4 AM Varyasyonla

- DSB Kipçözümü

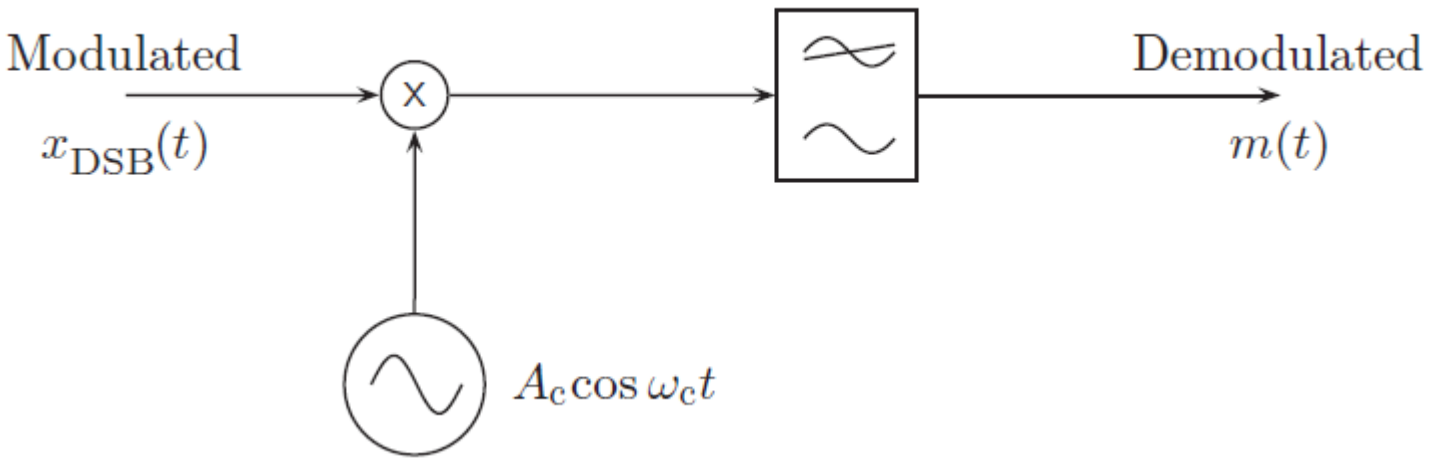

3.5.4 AM Varyasyonla

- SSB
  - Yar bant genişliği

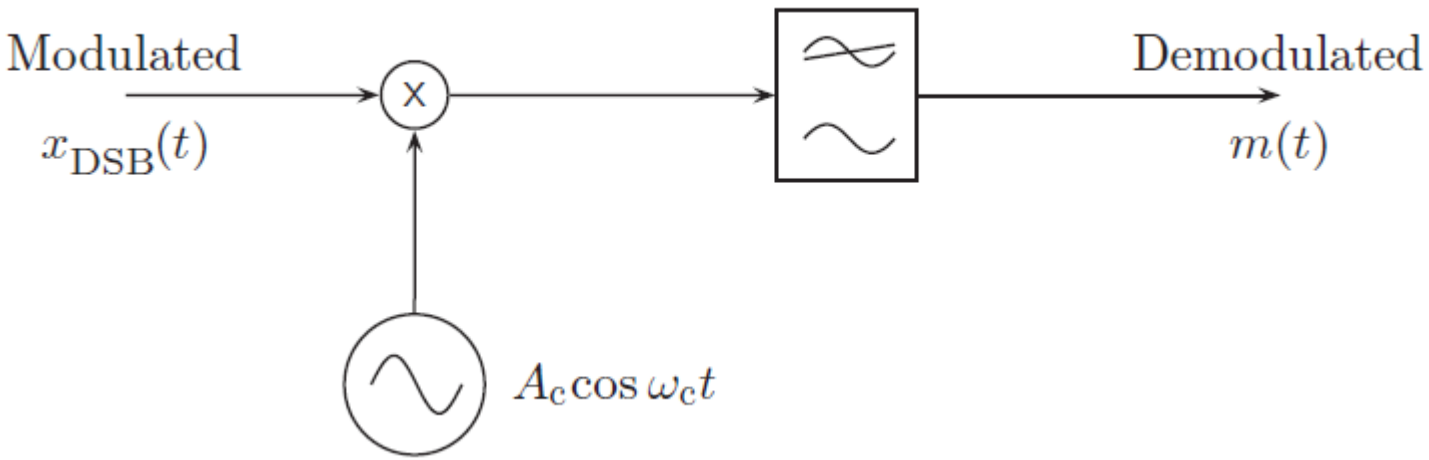

3.5.4 AM Varyasyonları

- SSB (Hartley)

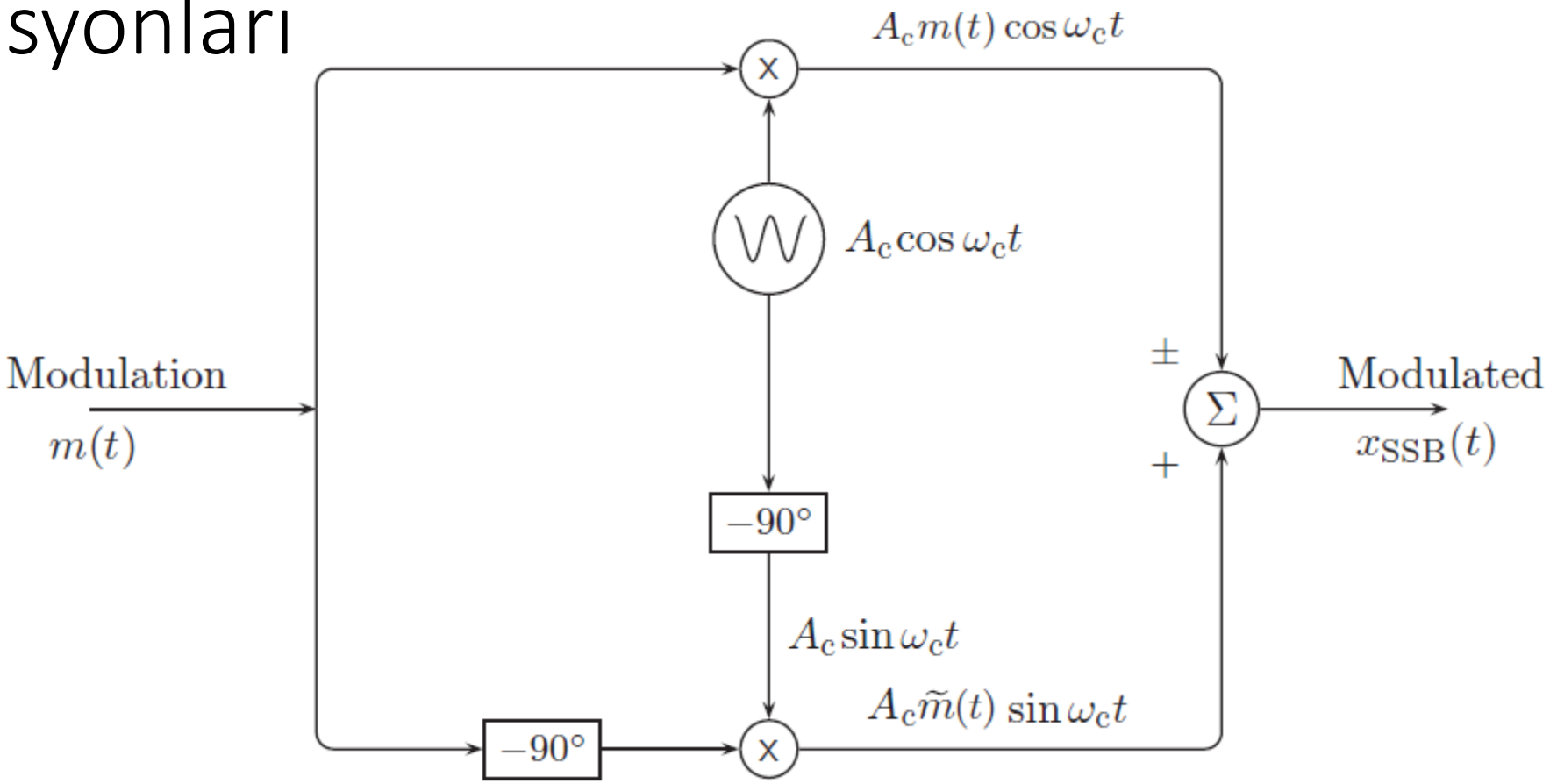

3.5.4 AM Varyasyonları

- SSB (Weaver)

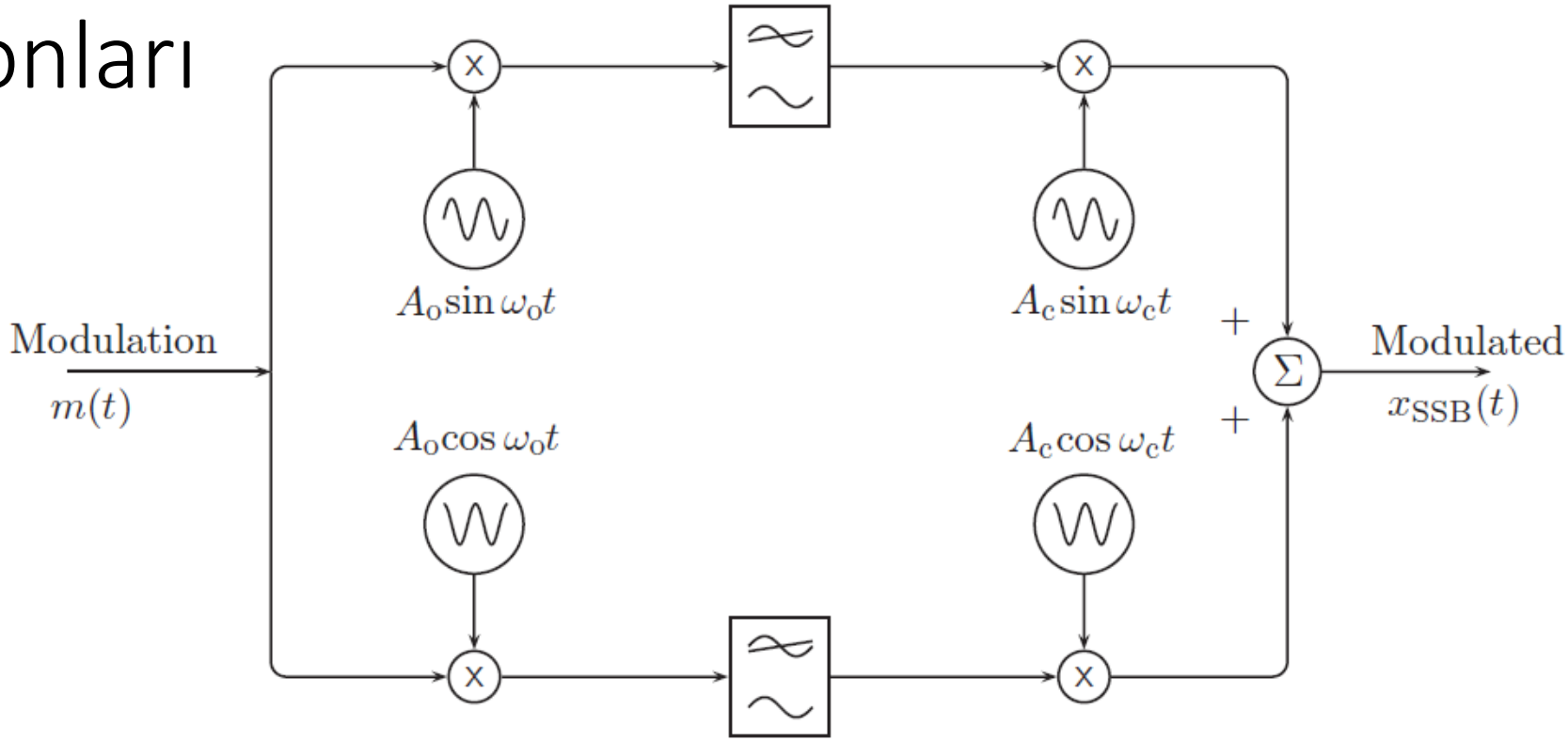

SSB devam

3.6 Frekans ve Faz Kiplemesi

- Genlik Kiplemesi, bilgiyi taşıyıcı sinyalin genliğine yüklüyordu.
  - Gürültü eklenince genlik doğrudan etkileniyor
  - Gürültüye direnci az
- Ffrekans kiplemesinde taşıyıcı sinyalin genliği değişmez.
  - Frekansı değişir
  - Avantajlı
  - Faz kiplemesi de FM ile yakından alakalı
  - $x_c(t) = A_c \cos(\omega_c t + \phi_c)$ iki terim de parantezin içinde

3.6.2 FM PM Analizi

- Genel form: $x_{angle}(t) = A_c \cos\theta(t) =..$
- FM: $\theta(t) = \omega_c t + k_f \int_0^t m(t)dt = 2\pi f_c t + 2\pi k_f \int_0^t m(t)dt$
- FM son hal:
- FM anlık frekans:
- PM: $\theta(t) = \omega_c t + k_p m(t)$
- PM son hal:
- PM anlık frekans

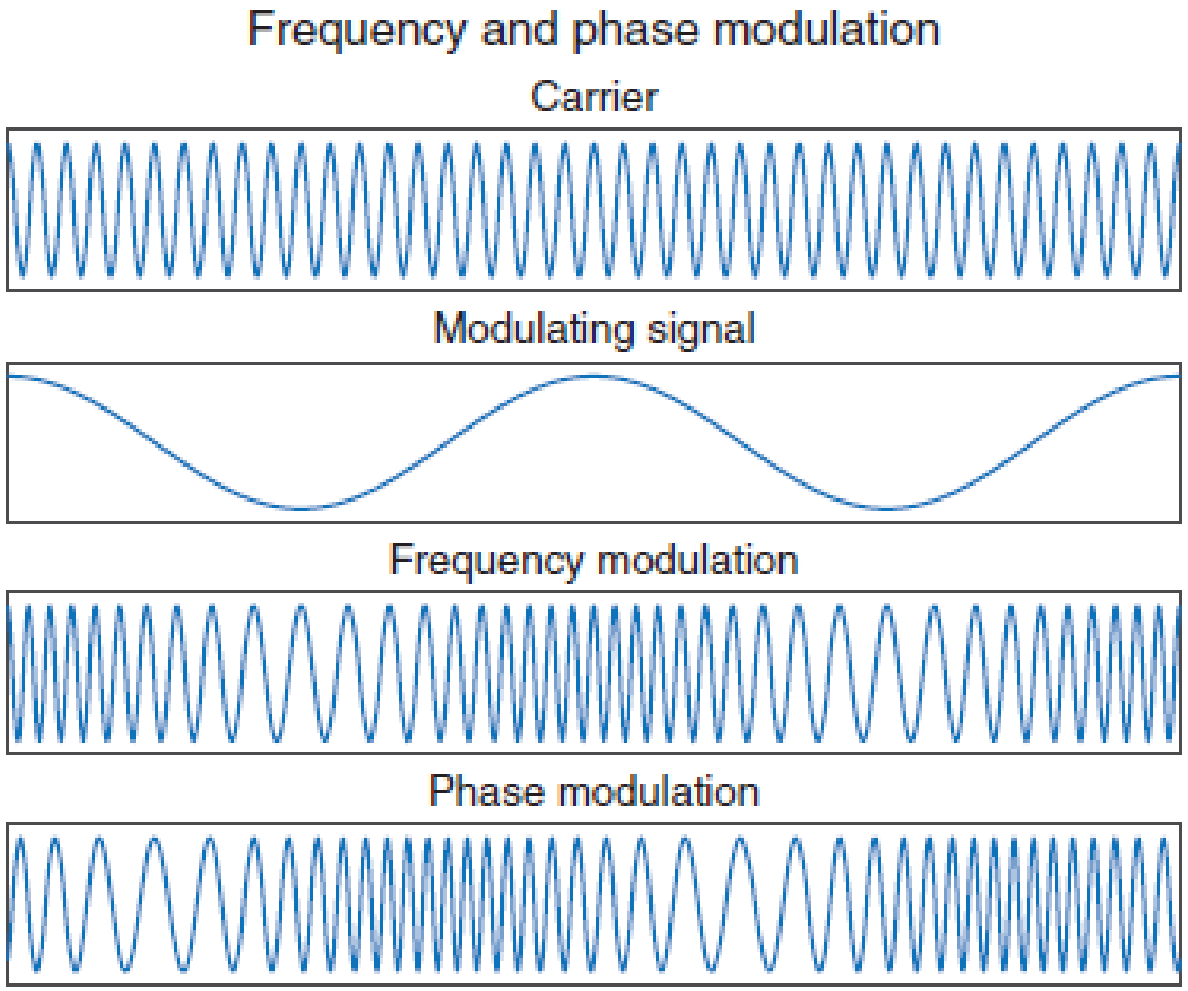

Figure 3.22 Comparison of frequency modulation and phase modulation for a sinusoidal modulation signal. The cosine modulating signal covers a range of amplitudes from positive to negative. Note the phase difference between FM and PM.

PM ve FM blok şemaları

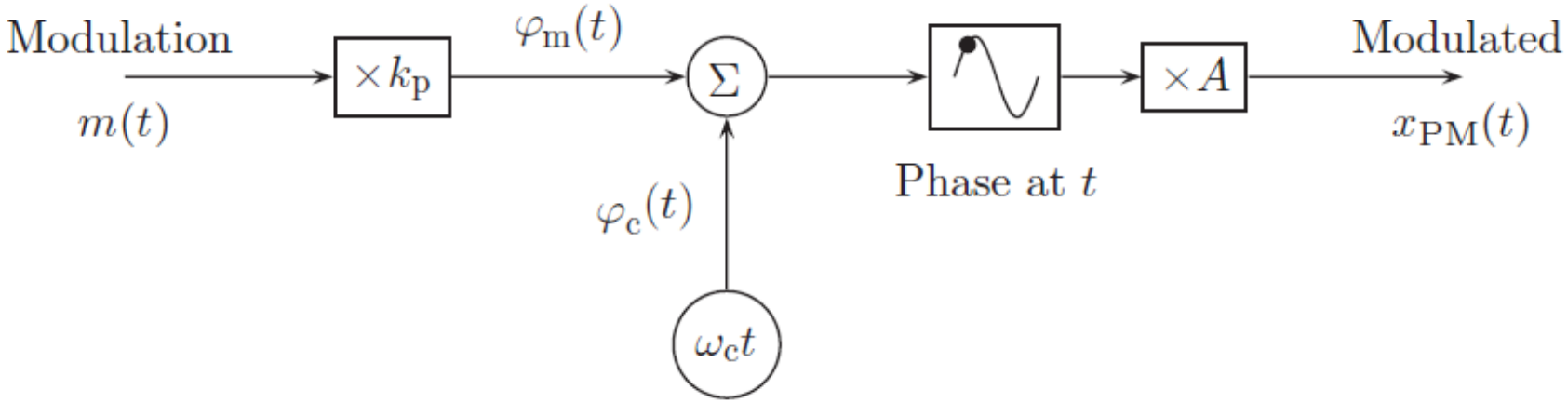

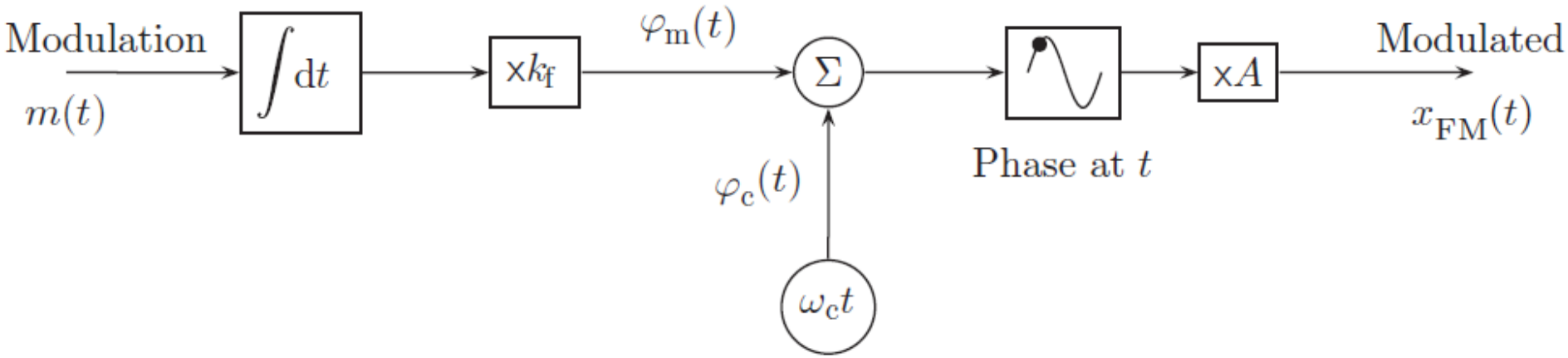

FM ve PM sinyal örnekleri

Figure 3.23 Comparison of frequency modulation and phase modulation for a sawtooth modulation signal. The sawtooth (ramp) modulating signal starts at zero and ramps up to a maximum value, then falls back to zero. Note the gradual frequency increase in FM, and the abrupt phase change in PM.

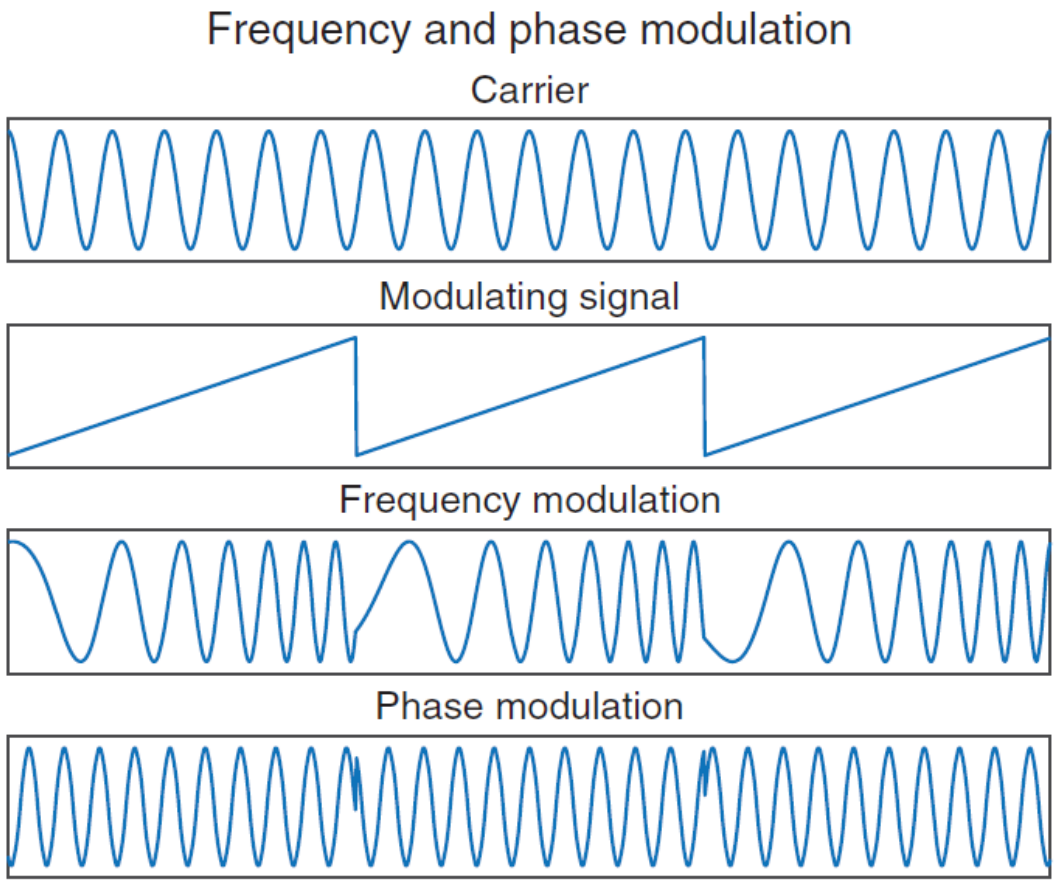

3.6.3 FM ve PM sinyal üretimi

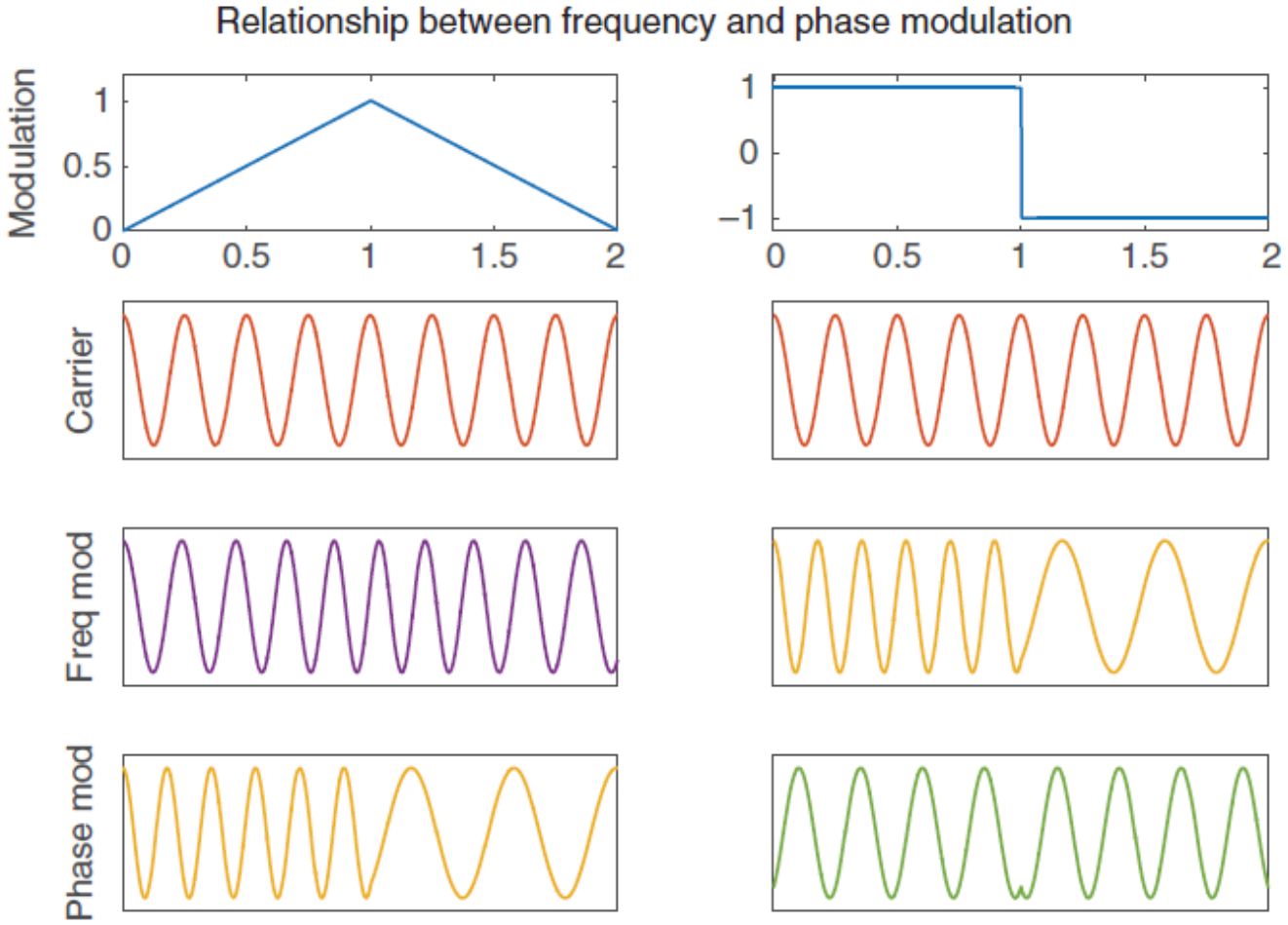

Figure 3.26 FM and PM modulation waveform comparison. In going from ramp to the step (left to right), we differentiate the modulation; in going from right to left, we integrate the modulation. Phase modulation of the ramp is identical to the frequency modulation of the step waveform.

3.6.4 FM Spektrumu

- FM/PM doğrusal olmayan kipleme yöntemleridir.
  - Doğrusallığın tanımı:
- Bu nedenle FM/PM sinyallerinde pek çok frekans bileşeni oluşur
- $x_{FM}(t) = A_c \cos\left(\omega_c t + k_f \int_0^t m(t)dt\right)$
- $m(t) = A_m \cos(\omega_m t)$ kabul edelim (analiz kolaylığı açısından)
- $x_{FM}(t) = A_c \cos\left(\omega_c t + \frac{k_f A_m}{\omega_m} \sin(\omega_m t)\right)$
- Frekansın değişme hızı: $\beta = \frac{k_f A_m}{\omega_m}$ →kipleme indeksi
- Frekans sapması:

3.6.4 FM Spektrumu - devam

- $x_{FM}(t) = A_c \cos\left(\omega_c t + \frac{k_f A_m}{\omega_m} \sin(\omega_m t)\right)$
- *Farklı gösterimler*
  - $\beta = \frac{k_f A_m}{\omega_m}$
  - FM radyo uygulaması:
  - Genişbant FM
  - Darbant FM
- Carson (1922) – Fourier seri açılımı
  - $x_{FM}(t) = A_c \cos(\omega_c t + \beta \sin(\omega_m t))$
  - $x_{FM}(t) = A_c \sum_{n=-\infty}^{\infty} J_n(\beta) \cos\big((\omega_c + \beta\omega_m)t\big)$
  - $J_n(\beta)$?

3.6.4 FM Spektrumu - devam

- Carson (1922) – Fourier seri açılımı
  - $x_{FM}(t) = A_c \sum_{n=-\infty}^{\infty} J_n(\beta) \cos\big((\omega_c + \beta\omega_m)t\big)$
- Açalım

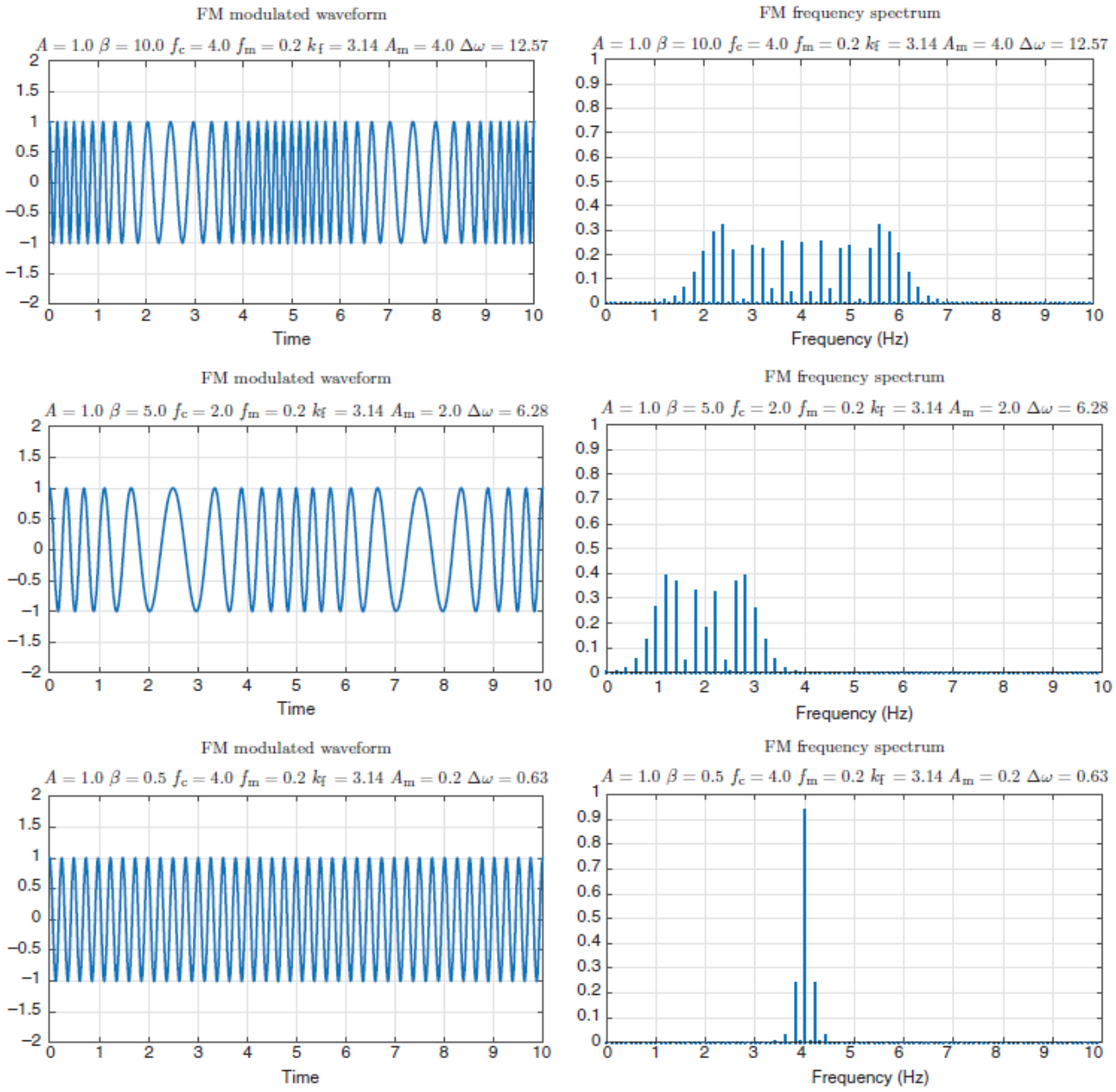

Figure 3.27 Frequency modulation showing time waveforms (left) and corresponding frequency spectra (right).

Bessel functions $J_n(\beta)$

Modulation index β

β	J_0	J_1	J_2	J_3	J_4	J_5	J_6	J_7	J_8	J_9	J_{10}
0	1.00	—	—	—	—	—	—	—	—	—	—
0.25	0.98	0.12	—	—	—	—	—	—	—	—	—
0.5	0.94	0.24	0.03	—	—	—	—	—	—	—	—
1	0.77	0.44	0.12	0.02	—	—	—	—	—	—	—
1.5	0.51	0.56	0.23	0.06	0.01	—	—	—	—	—	—
2	0.22	0.58	0.35	0.13	0.03	—	—	—	—	—	—
2.4	0.00	0.52	0.43	0.20	0.06	0.02	—	—	—	—	—
2.5	−0.05	0.50	0.45	0.22	0.07	0.02	—	—	—	—	—
3	−0.26	0.34	0.49	0.31	0.13	0.04	0.01	—	—	—	—
4	−0.40	−0.07	0.36	0.43	0.28	0.13	0.05	0.01	—	—	—
5	−0.18	−0.33	0.05	0.36	0.39	0.26	0.13	0.05	0.02	—	—
6	0.15	−0.28	−0.24	0.11	0.36	0.36	0.25	0.13	0.06	0.02	—
7	0.30	0.0	−0.30	−0.17	0.16	0.35	0.34	0.23	0.13	0.06	0.02
8	0.17	0.23	−0.11	−0.29	−0.10	0.19	0.34	0.32	0.22	0.13	0.06
9	−0.09	0.24	0.15	−0.18	−0.26	−0.06	0.20	0.33	0.31	0.21	0.13
10	−0.25	0.04	0.26	0.06	−0.22	−0.23	−0.01	0.22	0.32	0.29	0.21
12	0.05	−0.22	−0.08	0.19	0.18	−0.07	−0.24	−0.17	0.05	0.23	0.30
15	−0.01	0.20	0.04	−0.19	−0.12	0.13	0.21	0.03	−0.17	−0.22	−0.09

3.6.4 FM Spektrumu - devam

- $\sum_{n=-\infty}^{\infty} J_n^2(\beta) = 1$
- $x_{FM}(t) = A_c \sum_{n=-\infty}^{\infty} J_n(\beta) \cos\big((\omega_c + \beta\omega_m)t\big)$ sinyalinin gücü nedir?

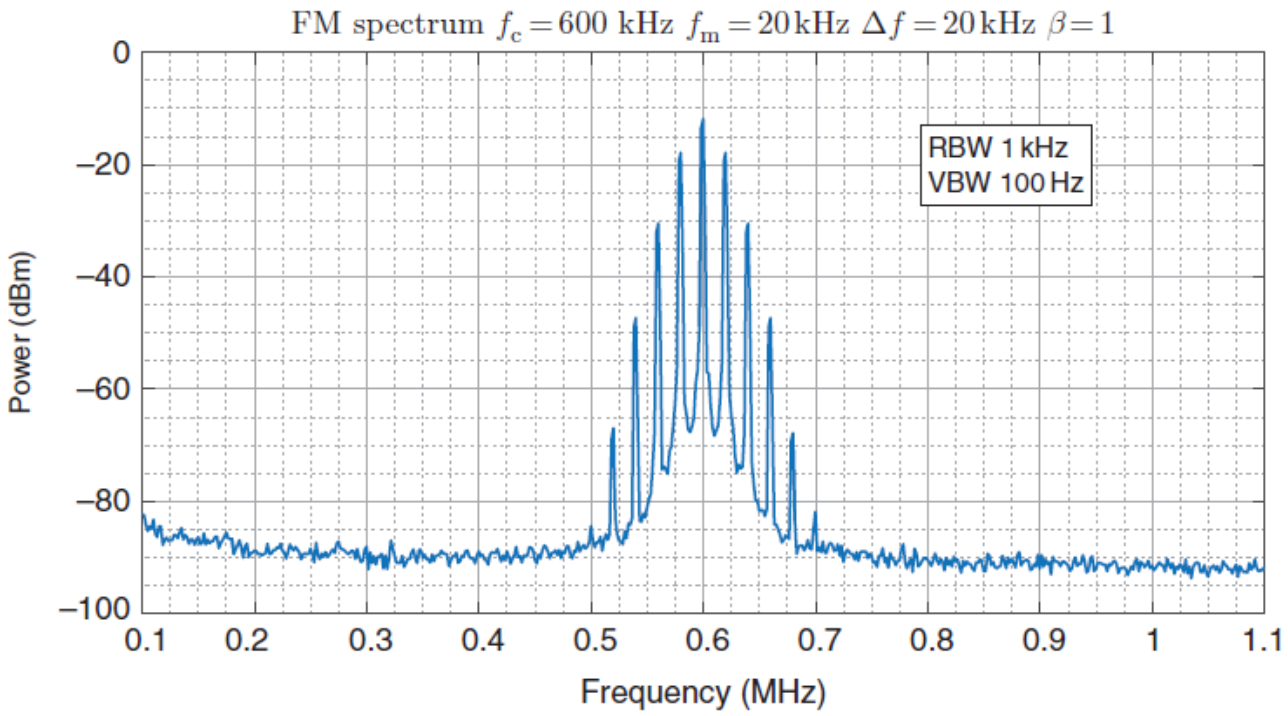

Figure 3.28 Measured spectrum for FM, $\beta = 1$.

Parameter name	Symbol	Value
Carrier frequency	f_c	600 kHz
Carrier amplitude	A_c	200 mVpp
Modulating frequency	f_m	20 kHz
Frequency deviation	Δf	20 kHz

From these values, the modulation index is calculated as

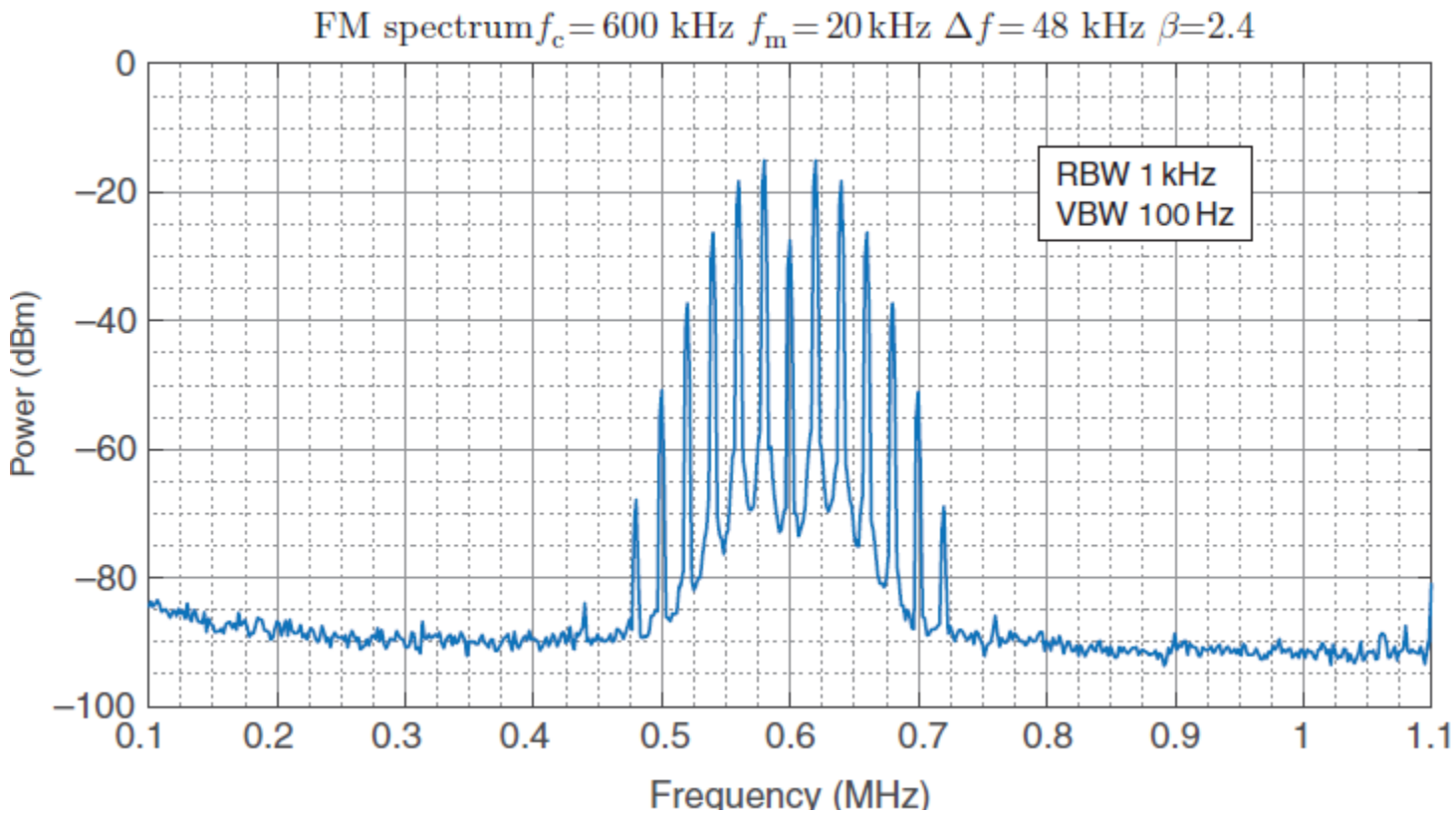

Parameter name	Symbol	Value
Carrier frequency	f_c	600 kHz
Carrier amplitude	A_c	200 mVpp
Modulating frequency	f_m	20 kHz
Frequency deviation	Δf	48 kHz

```
% determining the i n t e g r a l s for computing the
FM spectrum
N = 1000;
beta = 10;
n = 2;
taum = 1 ;
wm = 2*pi / taum;
wc = 10*wm;
t = linspace(0, taum , N);
dt = t(2)-t(1) ;
% the FM s i g n a l
xfm = cos (wc*t + beta*sin(wm*t));
% the modulation
xm = cos (wm*t);
% c a r r i e r s ignal ,% c a r r i e r plus modulation
frequency ,% c a r r i e r plus twice modulation f
requency
xc = cos(wc*t);
xh1 = cos(wc*t + wm*t);
xh2 = cos(wc*t + 2*wm*t ) ;
Integral11=dt*sum(xh1.*xh1);
Integral12=dt*sum(xh1.*xh2);
Integral21=dt*sum(xh2.*xh1);
Integral22=dt*sum(xh2.*xh2);
fprintf(1,'Product−Integral terms:\n' ) ;
fprintf(1 ,'Int 11 = %f Int12 = %f Int 21 = %f % Int 22 = %f \n'
,Integral11,Integral21, Integral21, Integral22);
fprintf(1,'FM Expansion terms:\n' ) ;
term1 = cos(2*wc*t+beta*sin(wm*t)+wm*t);
term2 = cos(beta*sin(wm*t)-n*wm*t);
IntegralTerm1 = dt*sum(term1);
IntegralTerm2 = dt*sum(term2);
fprintf(1 ,'Term 1 = %f Term 2 = %f \n', IntegralTerm1,
IntegralTerm2);
t=linspace(0,pi,N);
dt = t(2)-t(1);
Jarg = cos(beta*sin(t)-n*t);
Jcalc = (1/pi)*sum(Jarg*dt);
JMatlab = besselj(n,beta);
disp ('Compare Besselevaluations');
fprintf(1,'Calculated %f , MATLAB built−in
%f\n',Jcalc,JMatlab)
```

3.6.6 FM Kip Çözümü – Türev alarak

- $x_{FM}(t) = A_c \cos\left(\omega_c t + k_f \int_0^t m(t)dt\right)$
- $\frac{d\, x_{FM}(t)}{dt} = A_c\left(\omega_c + k_f m(t)\right) \sin\left(\omega_c t + k_f \int_0^t m(t)dt\right)$

- Conventional AM sinyaline benziyor
  - Mesaj artı taşıyıcı var
  - Kipleme indeksi?
  - Taşıyıcı olarak kosinüs yerine sinüs var. Problem mi?
  - Taşıyıcının frekansı sabit değil. Problem mi?
- Türev aldıktan sonra zarf algılayıcı ile mesaj sinyali elde edilebilir

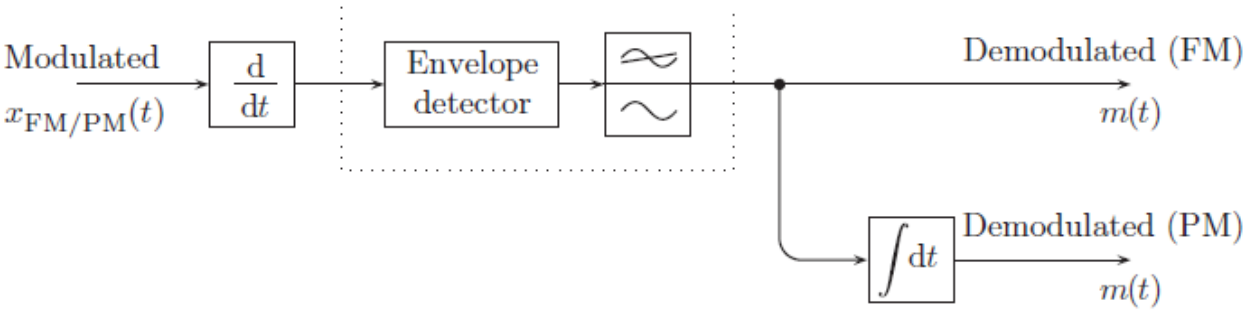

Figure 3.33 Asynchronous FM demodulation. The dotted part is effectively an AM demodulator. A preceding section (not shown) would limit the amplitude of the incoming signal, so as to reduce any spurious noise amplitude spikes.

PM?

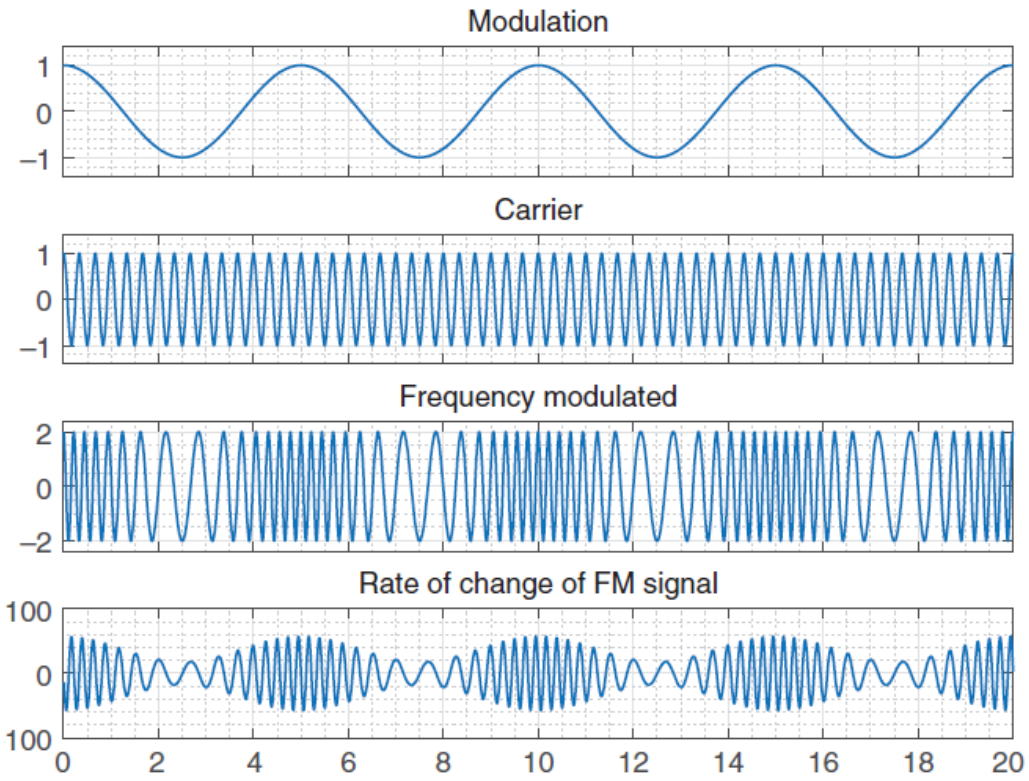

3.6.6 FM Kip Çözümü – PLL

- Faz Kilitlemeli Çevrim
  - Bir geri beslemeli devredir
  - Takip etmeye yarıyor (ör. Frekans takibi)
  - Taşıyıcının frekansı → mesaj sinyali!

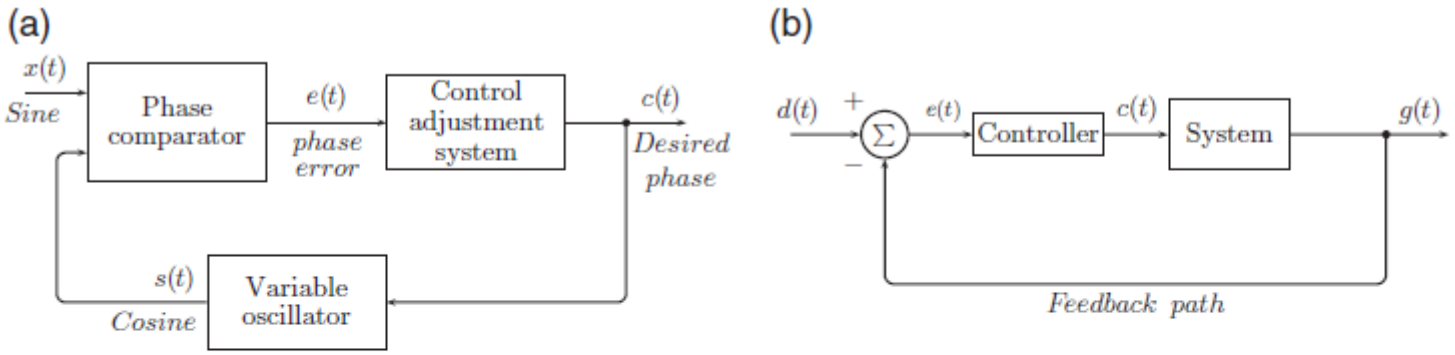

Figure 3.35 A phase-locked loop, which may be considered as a type of control system. The phase comparator determines how close the waveforms are and guides the oscillator via the controller to either increase or decrease its frequency so as to more closely align the timing (or phase) with the incoming waveform. (a) The phase-locked loop (b) A generic control system.

3.7 Faz takibi ve Senkronizasyon

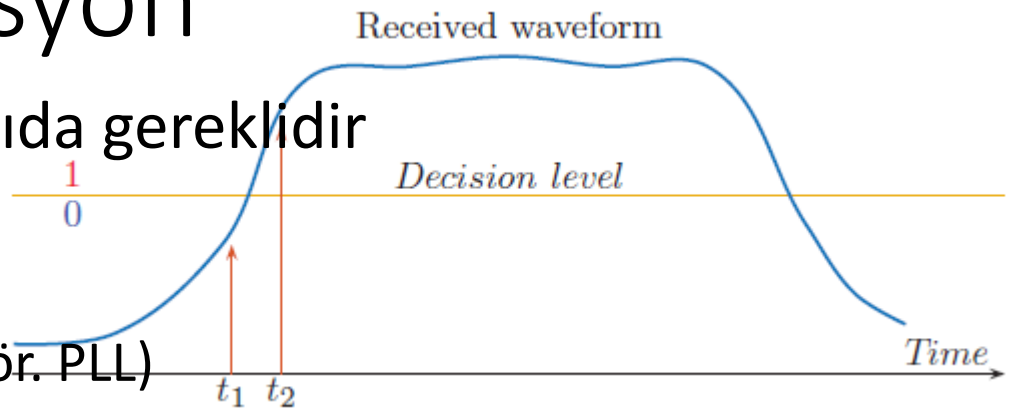

- Pek çok kipleme türünde taşıyıcı sinyal bilgisi alıcıda gereklidir
  - Frekans ve faz
  - Verici tarafından iletilebilir (Conv AM)
  - Alıcıya gelen sinyalden bir şekilde çekip çıkartılabilir (ör. PLL)
- Senkronizasyon
  - Özellikle sayısal iletimde şarttır
  - Paket, çerçeve, bit, sembol vb. nerede başlayıp bitiyor??
  - Gelen sinyali doğru zamanda örneklemek önemli
- Alıcı vericideki taşıyıcı fazları
- Giriş sinyali $\sin(\omega t)$
- Osilatör referans sinyali $\cos(\omega t)$
  - İkisinin çarpımının ortalaması sıfır (aynı fazdalarsa)

Hata sinyali

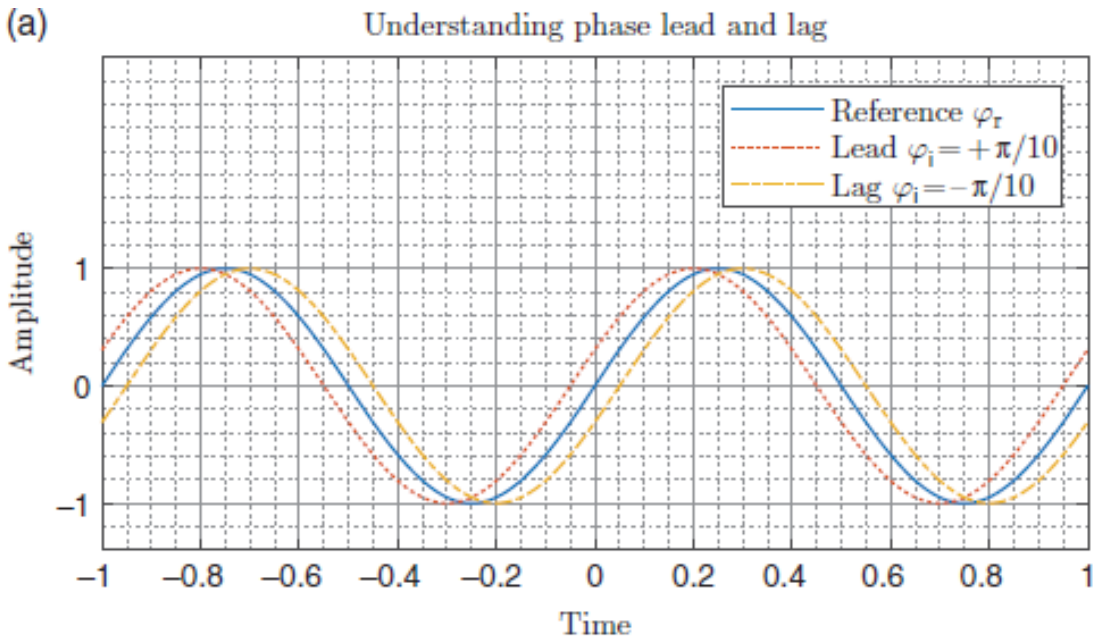

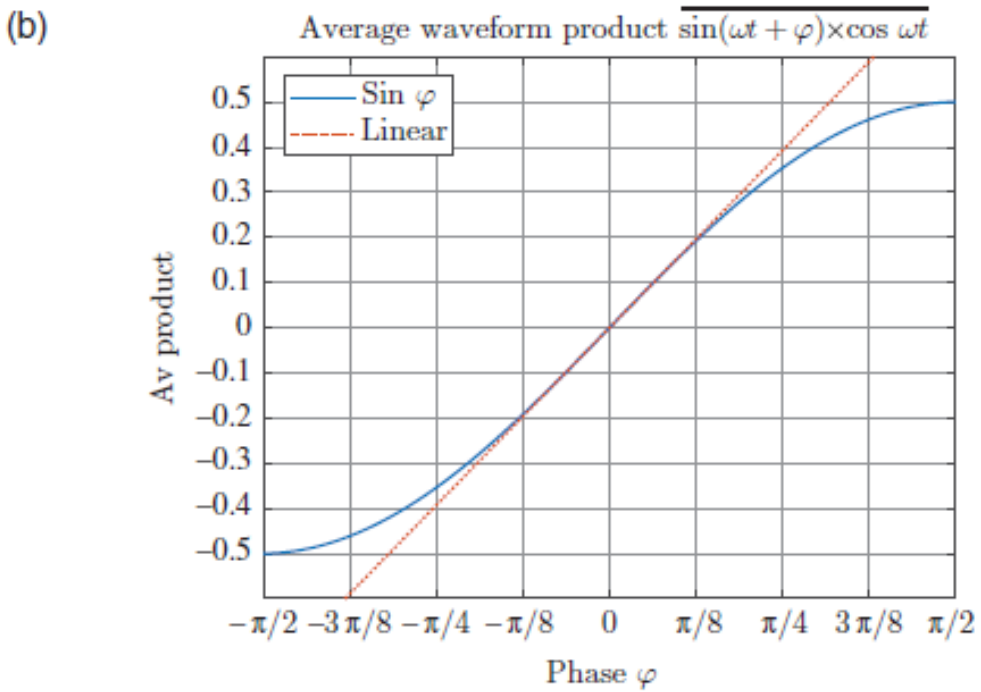

Osilatörün frekansını kontrol etmek

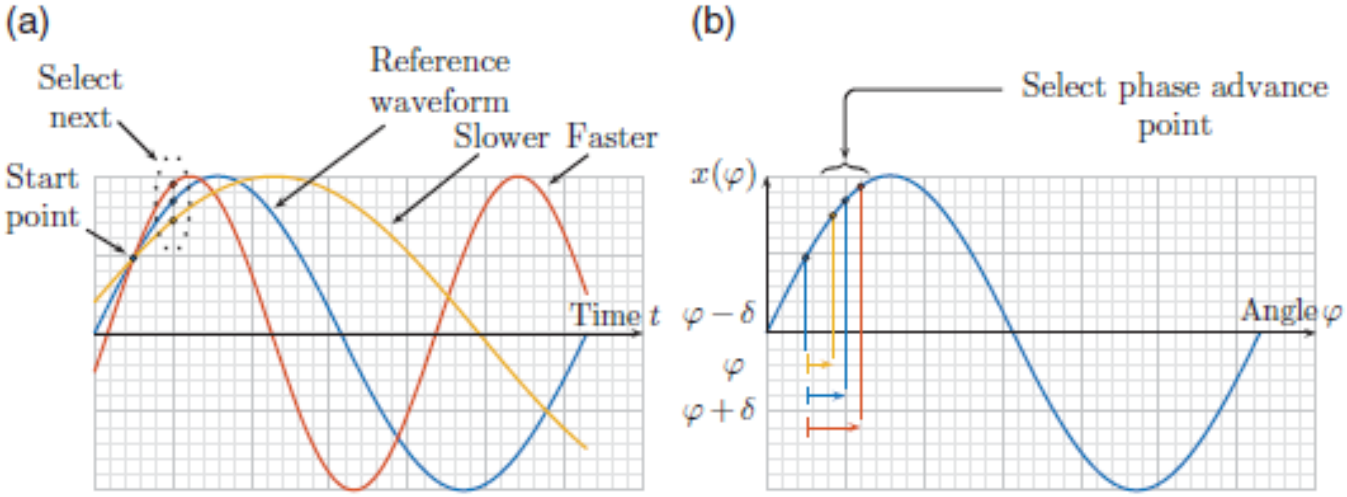

Figure 3.37 To derive the amplitude at the next step, and thus the overall waveform, the amplitude must be selected according to the fixed step φ plus or minus a small difference δ. Accordingly, this yields a faster or slower waveform. (a) Selecting the next amplitude at each step (b) Next step amplitude from phase advance/retard.

PLL Detaylı Şeması

- Proportional (α)
- Integral (β)
- K

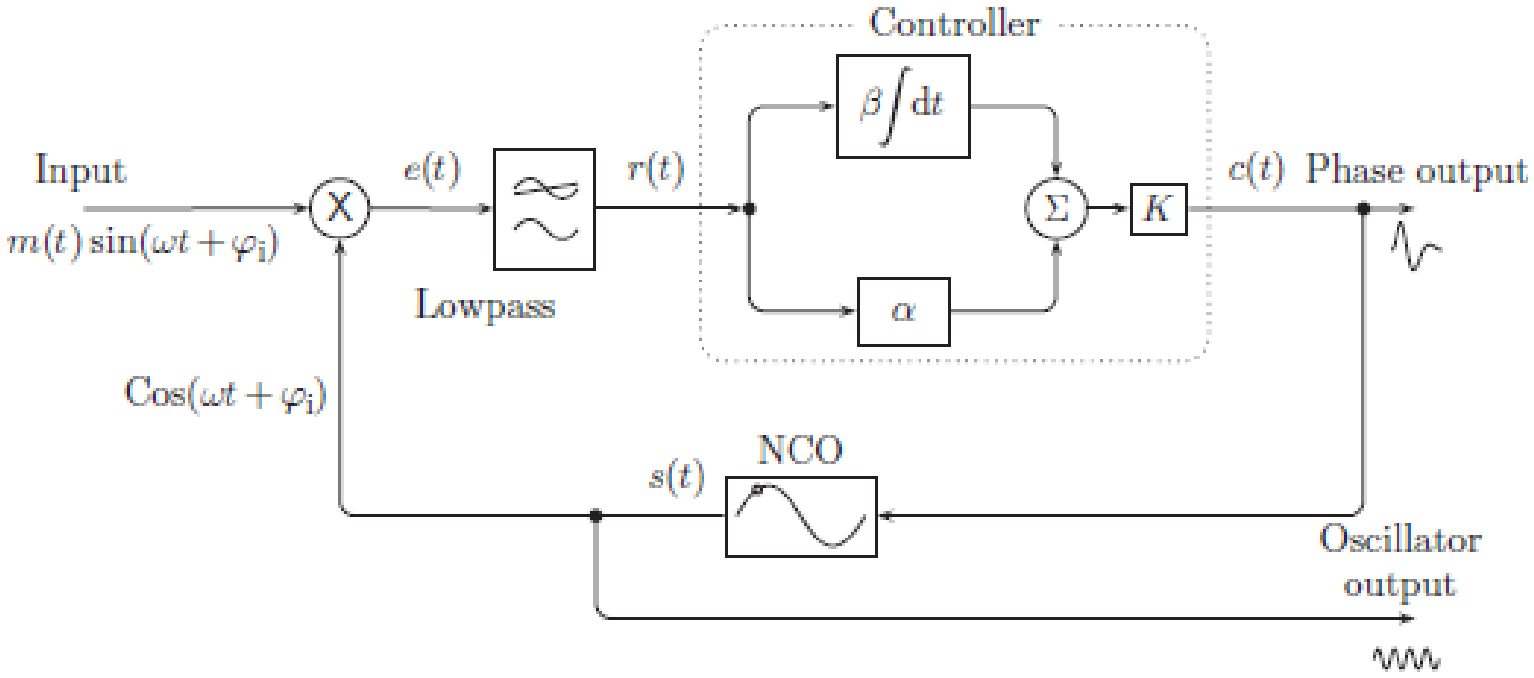

Figure 3.38 The PLL is comprised of phase detector (multiplier plus averaging filter), tunable controller, and numerically controlled oscillator, in a feedback-loop configuration.

Costas Loop

- İki osilatör var:
- Sayısal haberleşmede kullanılır

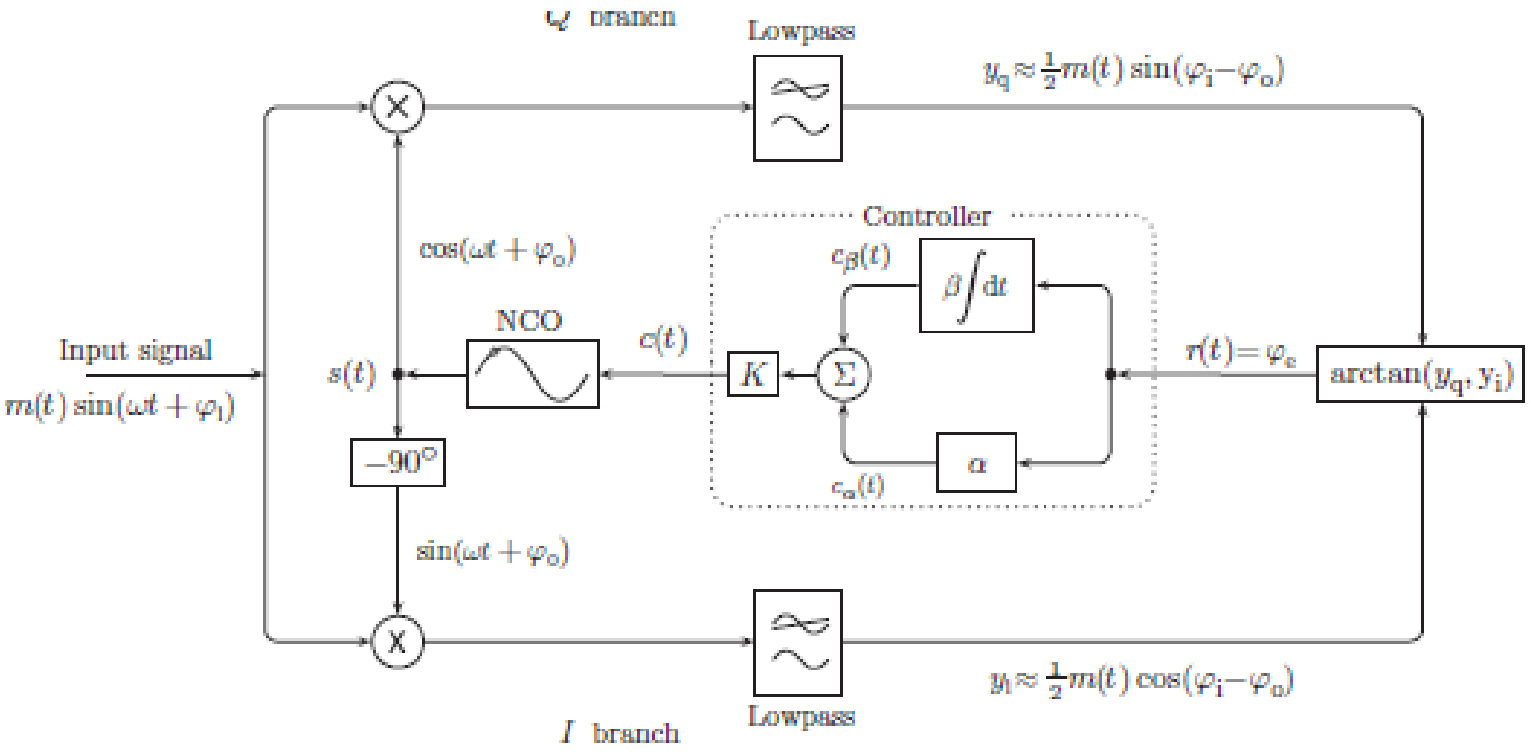

PLLtest.m

- Costas Loop kodu

PLL Operation – Phase Adjustment

- Input and oscillator waves shown.
- Adjusts oscillator frequency to track phase.
- Amplitude of oscillator not critical.

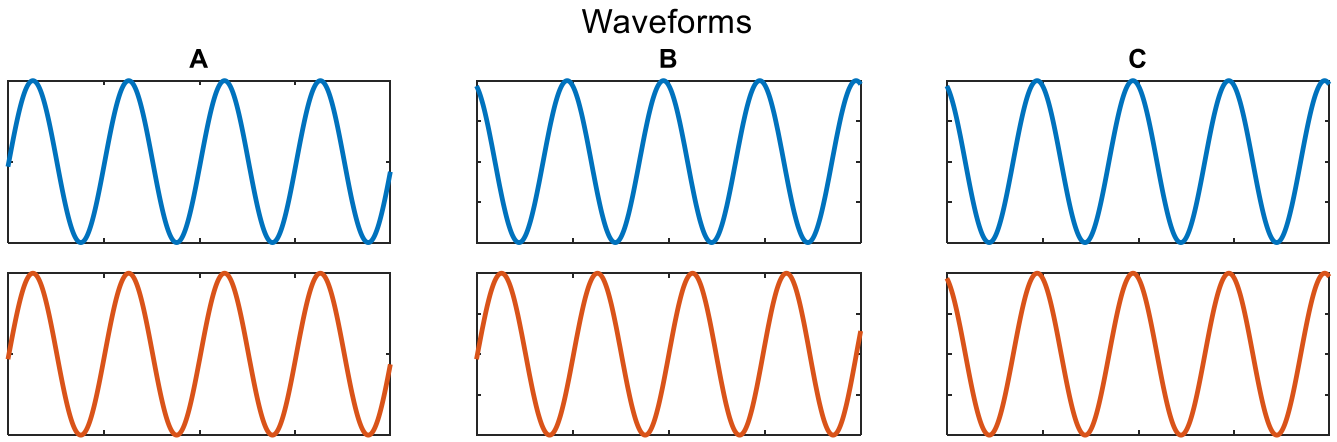

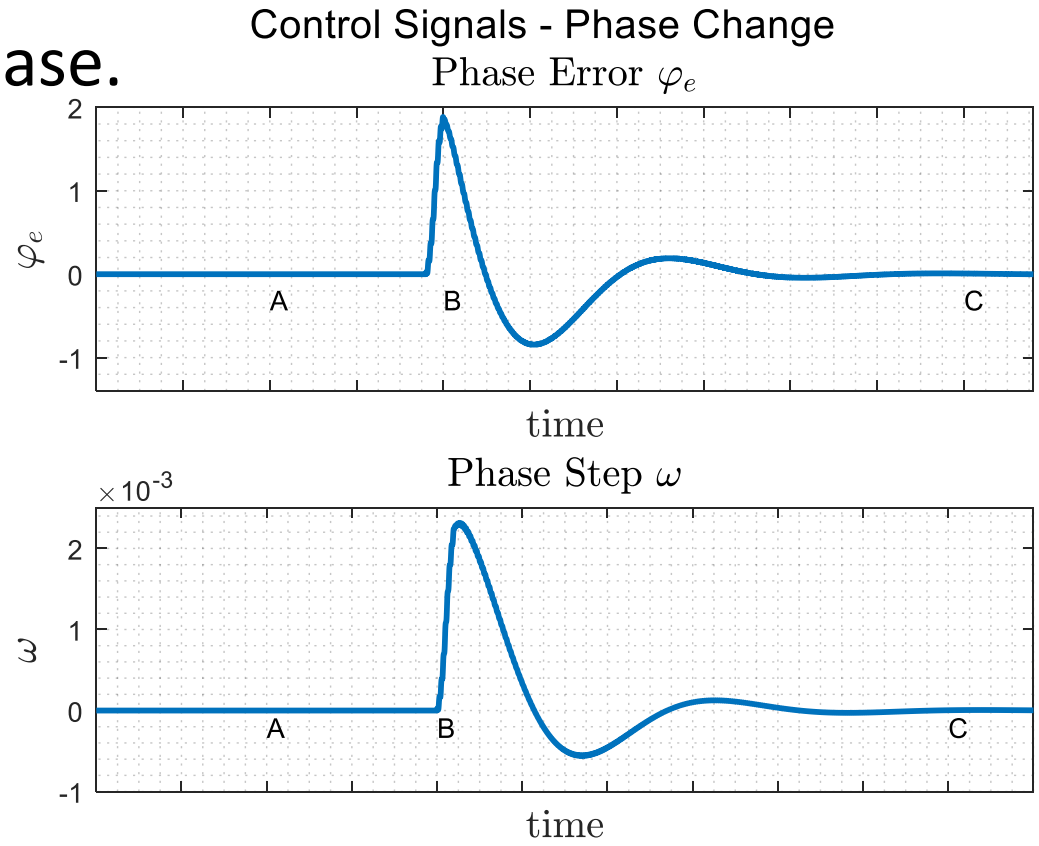

© John Wiley & Sons 2018

PLL Operation – Frequency Adjustment

- Input and oscillator waves shown.
- Adjusts oscillator to go to new frequency.
- This means changing the phase step.

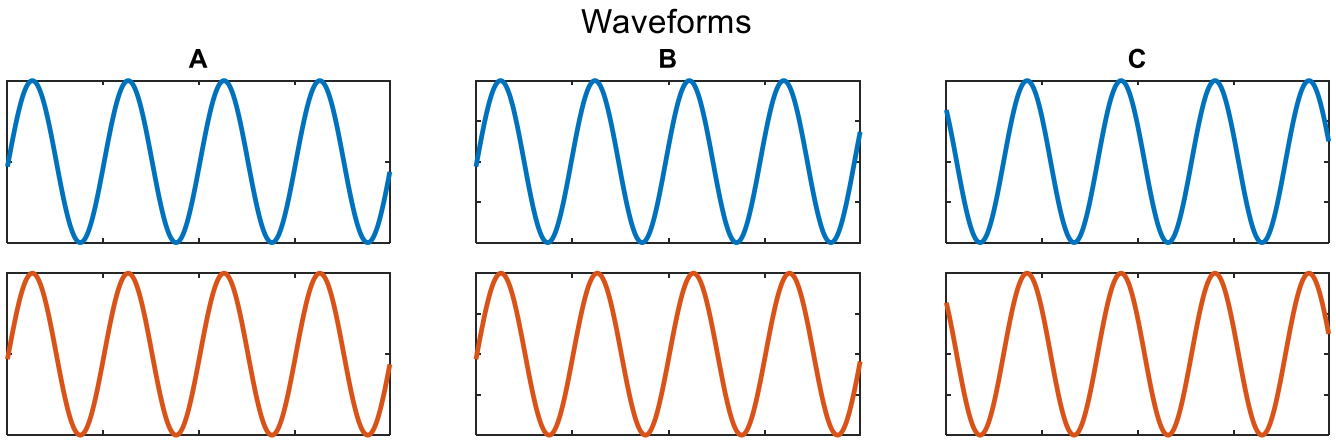

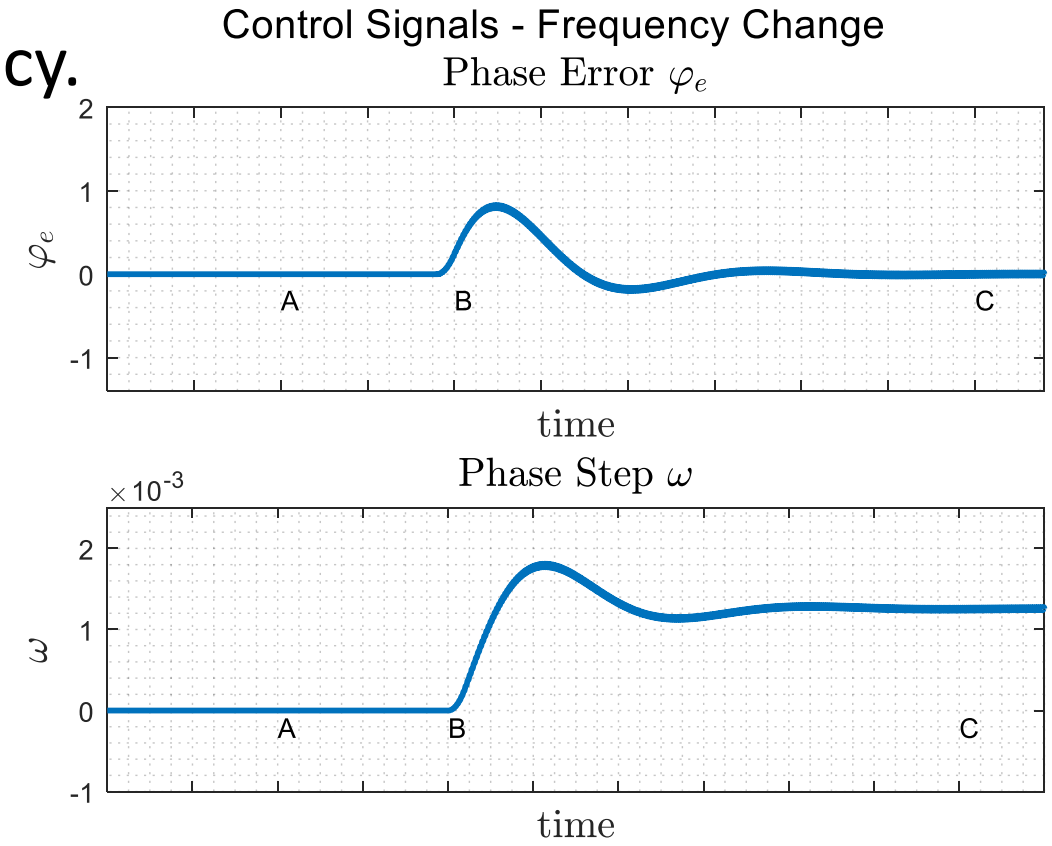

© John Wiley & Sons 2018

3.8 IQ Sinyalleri ile Kipçözümü

- Teknoloji (sayısal elektronik ve sinyal işleme) ilerledikçe, lipçözümü için benimsenen yöntemler değişmiştir.
  - Eskiden, AM: Envelope detector, FM: Türev+Envelope detector (ANALOG)
  - Şimdi: IQ kipçözümü (örneklenmiş sinyal üzerinden)
  - Bütün bantgeçirgen sinyaller kompleks sayılarla ifade edilebilir.
  - Bütün kompleks sayılar bir sinüs ve kosinüsün ağırlıklı toplamı olarak yazılabilir.
- Phase-Locked Loop (PLL) opens up many possibilities.
  - Costas loop gives quadrature signals – sine and cosine.
  - Quadrature means 90° phase difference.
  - Can demodulate using sine and cosine signals. This is coherent or synchronous demodulation.
- If we have a local tracking oscillator, we can correctly decode data bits in digital transmission.
- Convention: I or in-phase is cosine, Q or quadrature is sine.

© John Wiley & Sons 2018

IQ Signals and Phase Quadrature

- Quadrature signals give us a way to separate out two components.
- **Idea of quadrature demodulation of digital data:**
  - Multiply incoming waveform by sine, add up over one symbol time.
  - Multiply incoming waveform by cosine, add up over one symbol time.
- This gives two separate “channels”.
- Can go further: change amplitude and phase.

© John Wiley & Sons 2018

IQ Signal Conventions

- I or in-phase is cosine, Q or quadrature is sine.
- Physical time signal… visualize on IQ diagram:

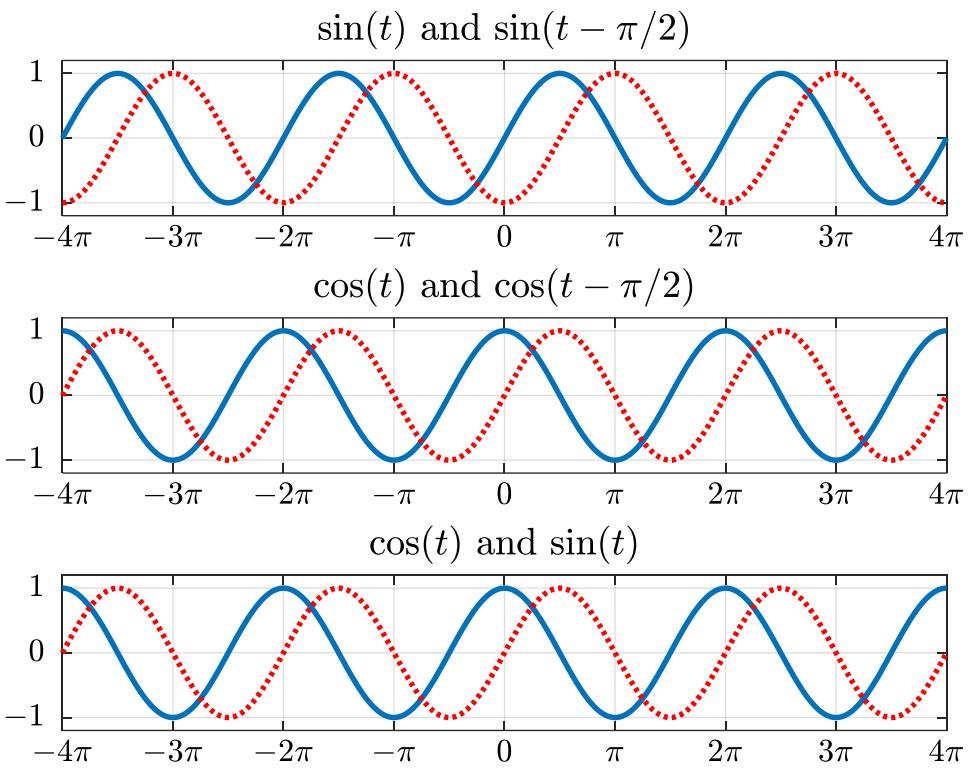

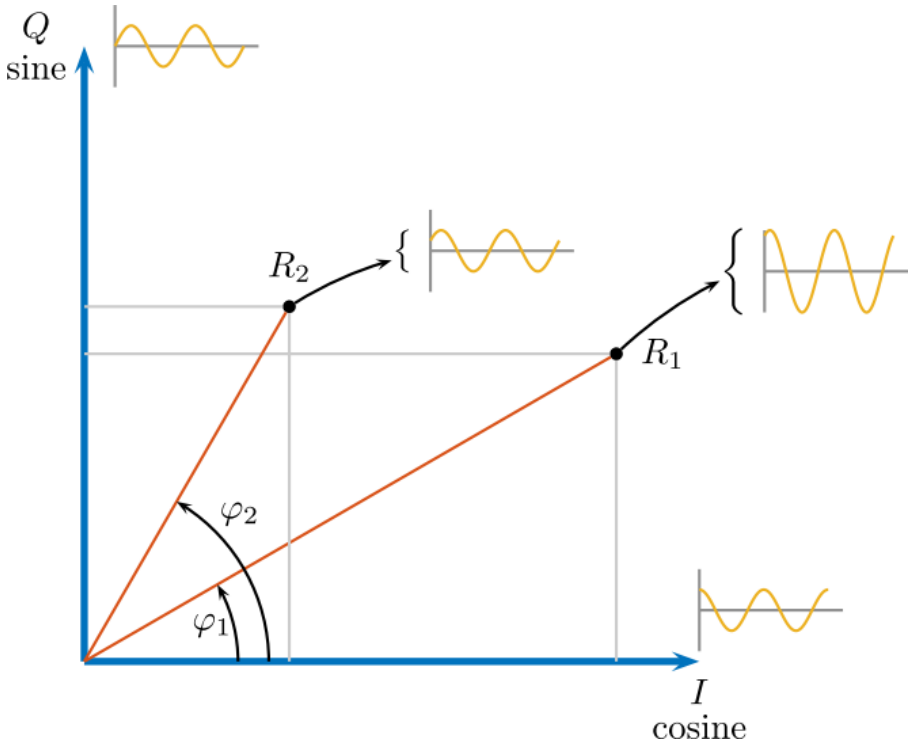

© John Wiley & Sons 2018

IQ bileşenlerinin elde ediliş şekli

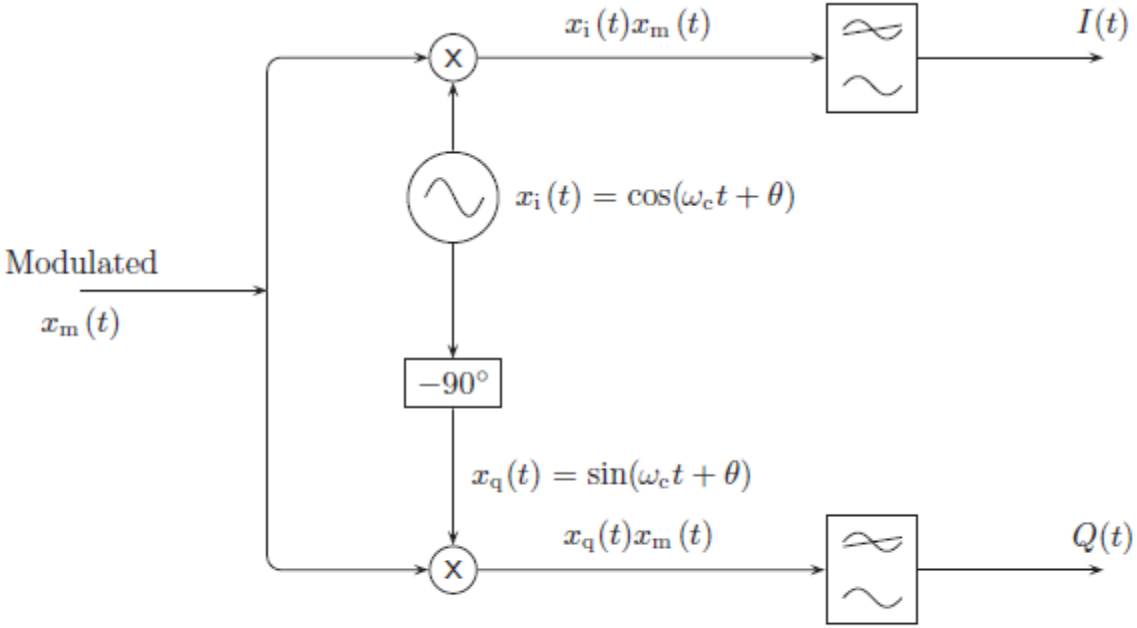

Figure 3.43 Demodulation with quadrature signals: *I* is the cosine component, and *Q* is the sine component.

3.8.3 IQ Sinyal Üzerinden AM Kipçözümü

- $x_{PM}(t) = A\cos[\omega_c t] + A_m \sin\omega_m t \cos\omega_c t$
- $m(t) = A_m \sin\omega_m t$

- $x_i(t) = \cos(\omega_c t + \theta)$
- $x_q(t) = \sin(\omega_c t + \theta)$

3.8.3 IQ Sinyal Üzerinden PM Kipçözümü -devam

- I ve Q sinyalleri ile çarp, alçak geçirgen filtreden geçir, DC’yi bloke et. Karelerinin toplamının karekökünü al

3.8.3 IQ Sinyal Üzerinden PM Kipçözümü

- $x_{PM}(t) = A\cos\left[\omega_c t + k_p m(t)\right]$
- $m(t) = A_m \sin \omega_m t$

- $x_i(t) = \cos(\omega_c t + \theta)$
- $x_q(t) = \sin(\omega_c t + \theta)$

3.8.3 IQ Sinyal Üzerinden PM Kipçözümü -devam

- I ve Q sinyalleri ile çarp, alçak geçirgen filtreden geçir, arctan

3.8.3 IQ Sinyal Üzerinden FM Kipçözümü

- $x_{FM}(t) = A\cos\left[\omega_c t + k_f \int_0^t m(\tau)d\tau\right]$
- $m(t) = A_m \cos \omega_m t$

- $x_i(t) = \cos(\omega_c t + \theta)$
- $x_q(t) = \sin(\omega_c t + \theta)$

3.8.3 IQ Sinyal Üzerinden FM Kipçözümü -devam

- I ve Q sinyalleri ile çarp, alçak geçirgen filtreden geçir, arctan, en sonunda türev

Kodlar

- SimpleQuadDemodAM.m
  - Bir AM sinyali oluşturuyor ve IQ sinyalleri üzerinden kipçözümü yapıyor
- SimpleQuadDemodPM.m
  - Bir PM sinyali oluşturuyor ve IQ sinyalleri üzerinden kipçözümü yapıyor
- SimpleQuadDemodFM.m
  - Bir FM sinyali oluşturuyor ve IQ sinyalleri üzerinden kipçözümü yapıyor.

3.9 Sayısal İletim için Kipleme

- Analog iletim: AM, PM , FM
  - İletilen sinyal sonsuz çeşit değer alabilir
- Sayısal iletişim ve avantajları
  - İletilen sinyal belli ayrık değerler alabilir
  - Gürültü temizlenebilir
  - Hatalar düzeltilebilir
  - Sıkıştırma yapılabilir
- Basically just extend previous amplitude, frequency or phase modulation idea. (temel mantık aynı)
- Simple initially, as there are only two levels:
  1 = a given amplitude, frequency or phase
  0 = another amplitude/frequency/phase
- Sayısal veri
  - Doğrudan sayısal olarak üğretimlmiş (ör. Dosya, eposta)
  - Analogdan sayısala çevrilmiş (ör. Ses, sensör verisi)

© John Wiley & Sons 2018

3.9.1. Amplitude Shift Keying (ASK)

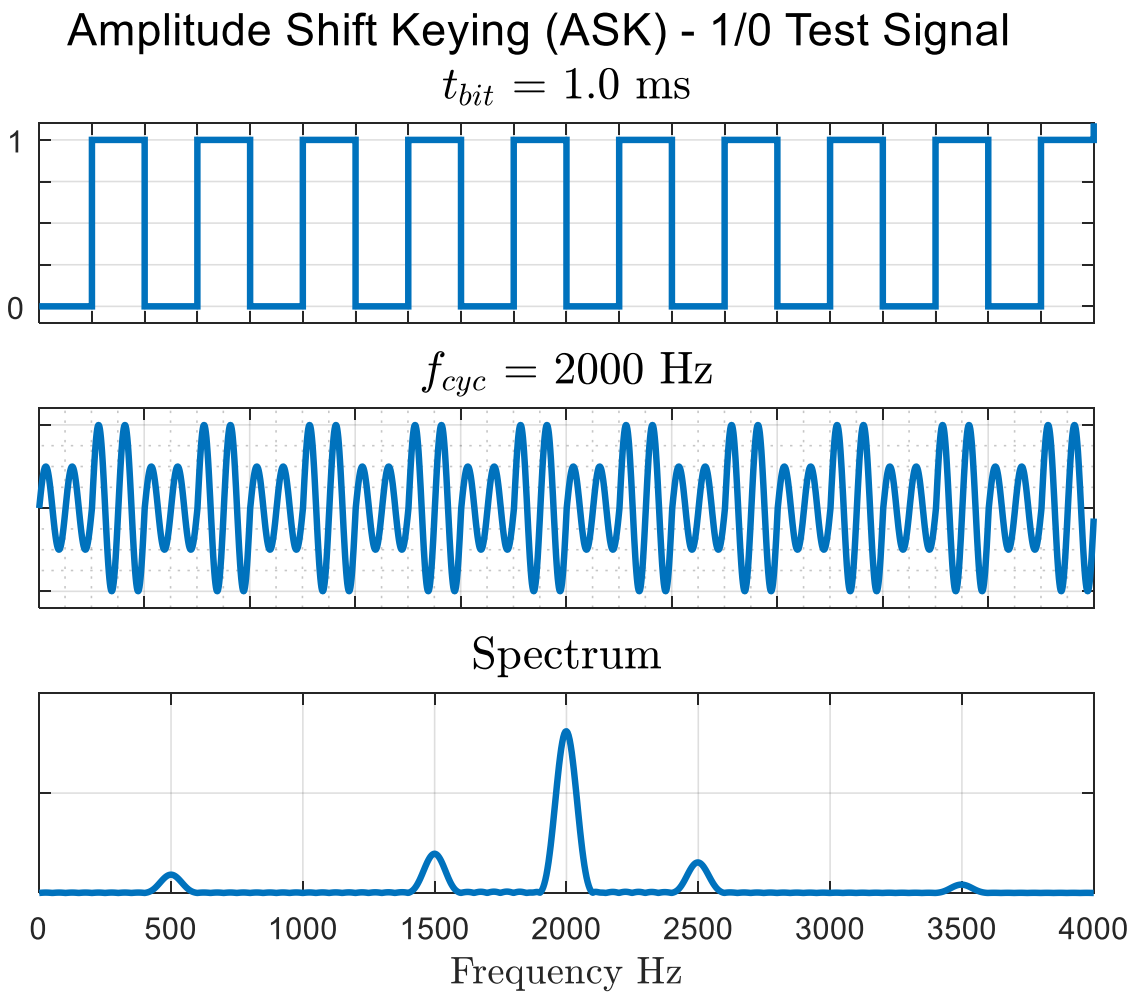

© John Wiley & Sons 2018

Frequency Shift Keying (FSK)

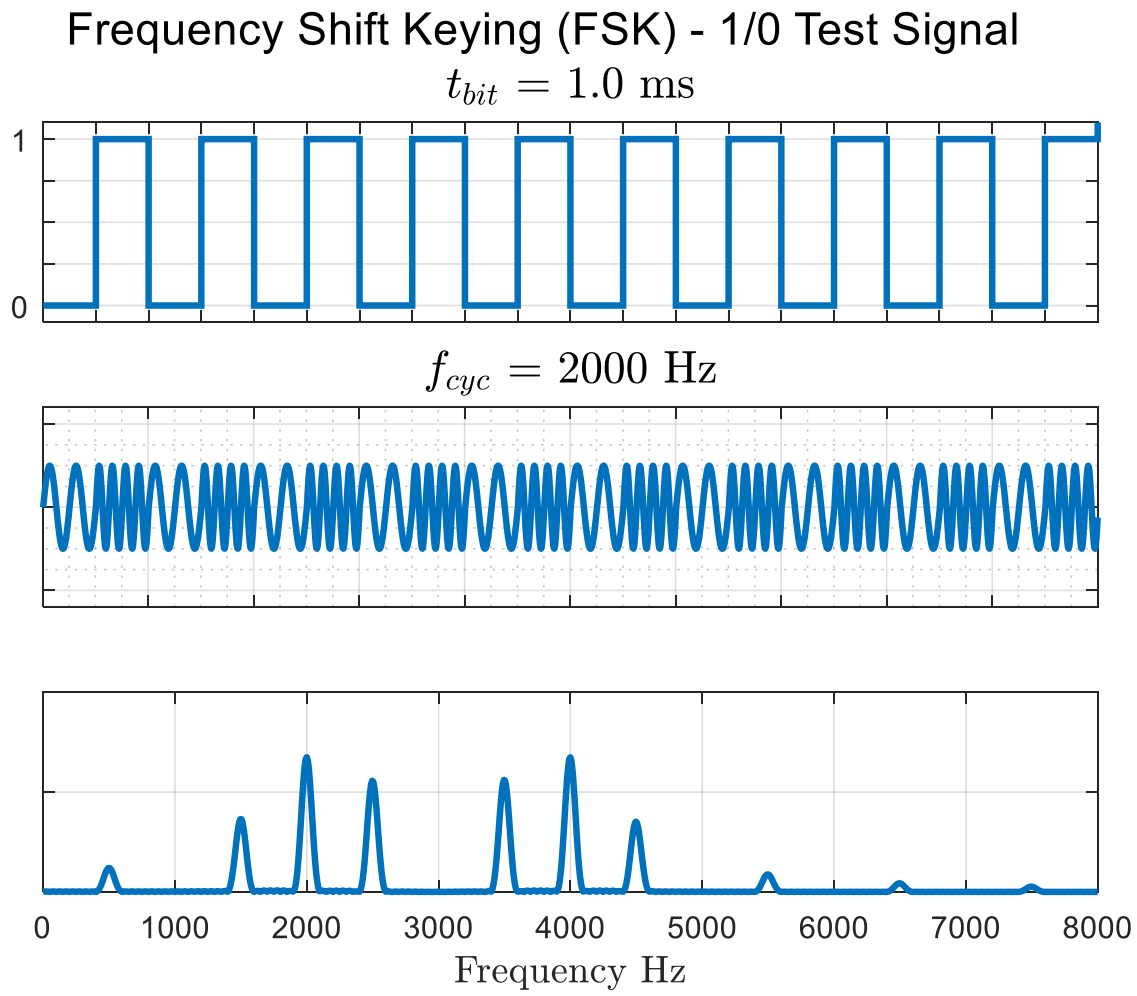

© John Wiley & Sons 2018

Phase Shift Keying (PSK)

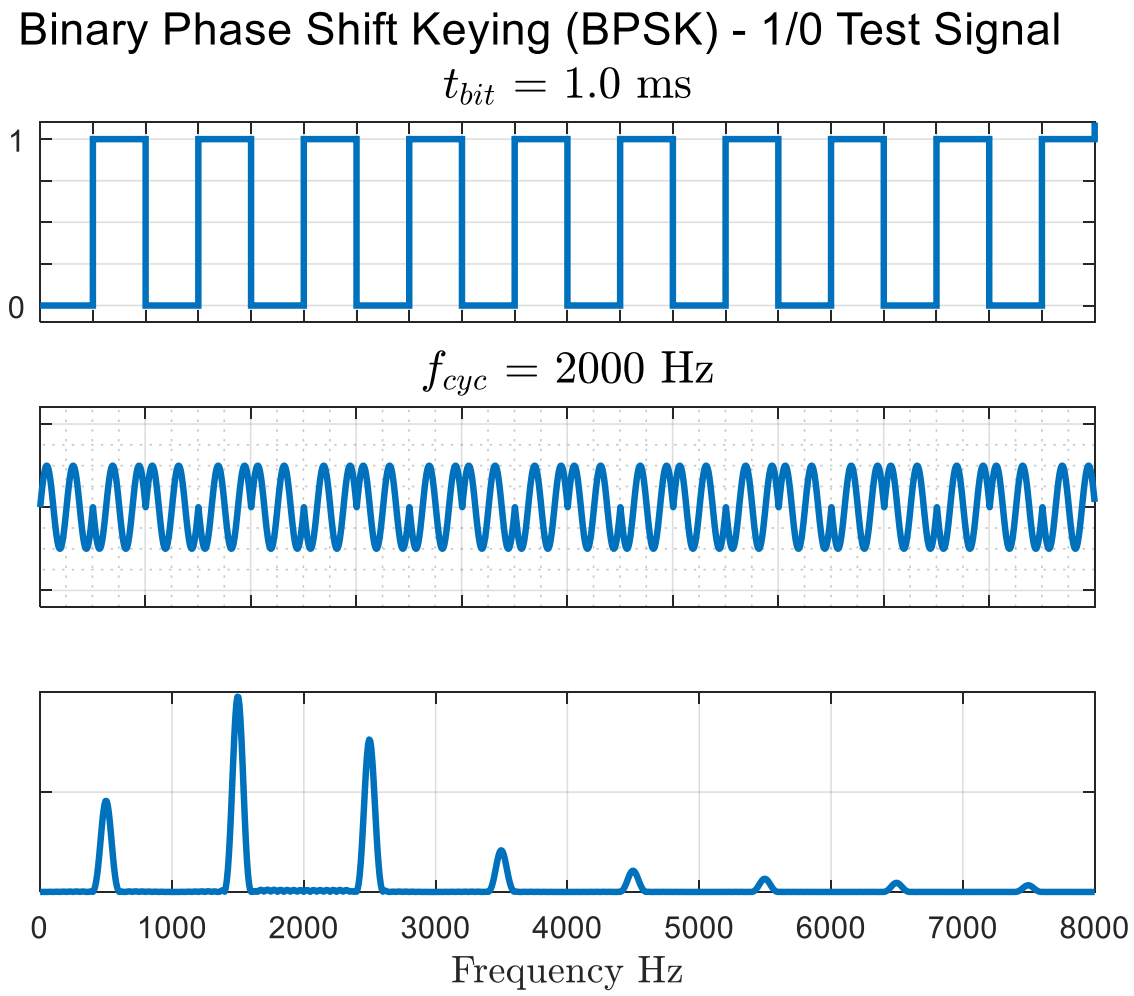

© John Wiley & Sons 2018

3.9.1 Sayısal Kipleme

- Analog sinyalin bir özelliğine sayısal veriyi kodlama
  - ASK
  - PSK
  - FSK
- Birim zamanda daha çok veri göndermek
  - Daha çok seviye
  - M-ASK
  - M-PSK
  - M-FSK
  - $M = 2^B$
  - Sembol
  - Sembol süresi
  - Hem genlik hem faz: QAM
  - Birden fazla kanaldan aynı anda göndermek (subchannel)

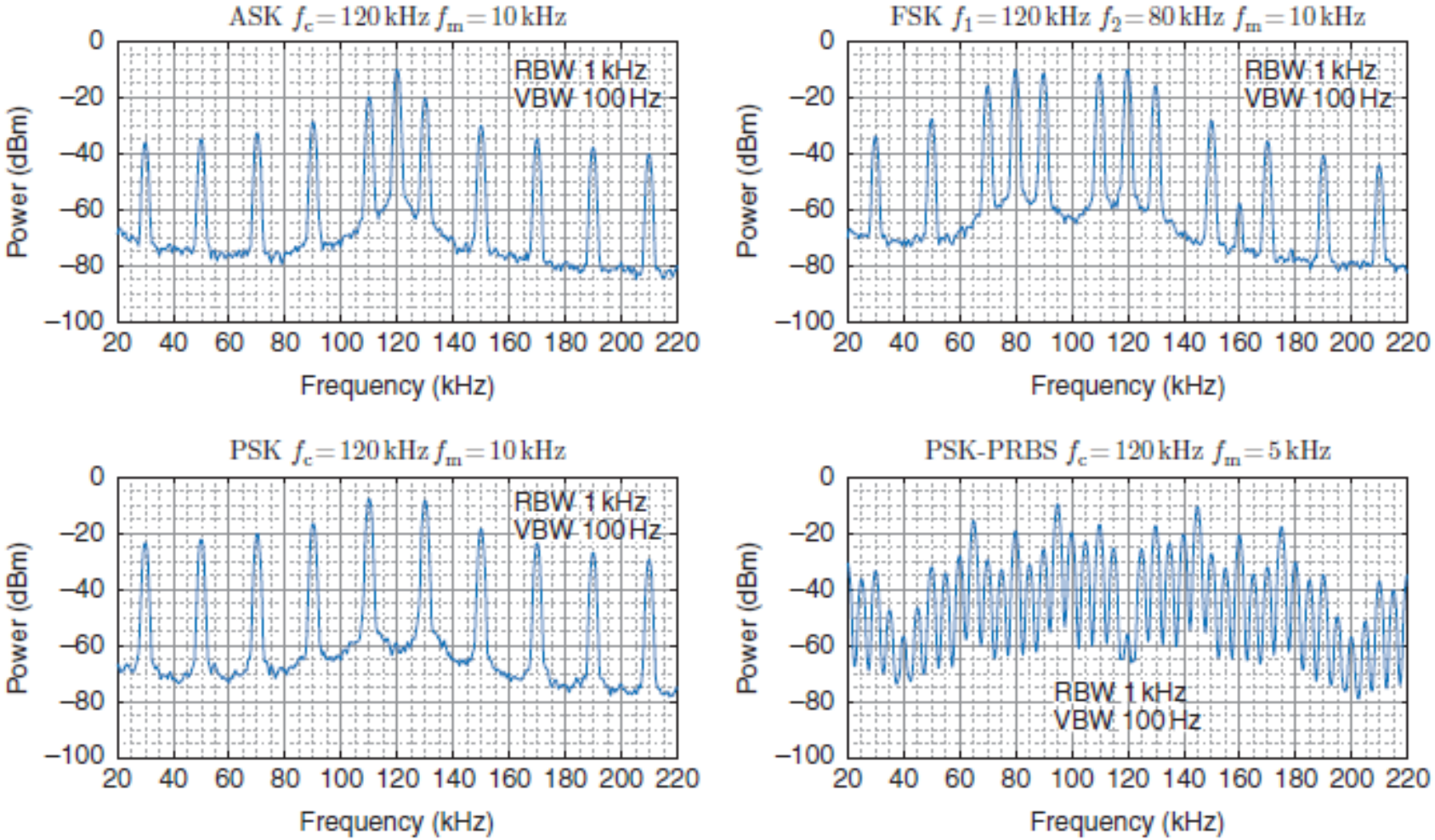

Figure 3.50 Measured spectra for ASK and FSK (top) and PSK (lower). Each shows the spectrum for a 1/0 alternating input sequence. The PSK case shows in addition the spectrum resulting from a pseudorandom binary sequence (PRBS) bitstream. Note that the power is measured in dBm.

3.9.2 Recovering Digital Pulses

- Noisy channel distorts waveform, how to make bit decisions?
- Two solutions: correlate-integrate or matched filter.
- Pulse waveform, +1, -1, -1, +1, -1, darbe aralığı?

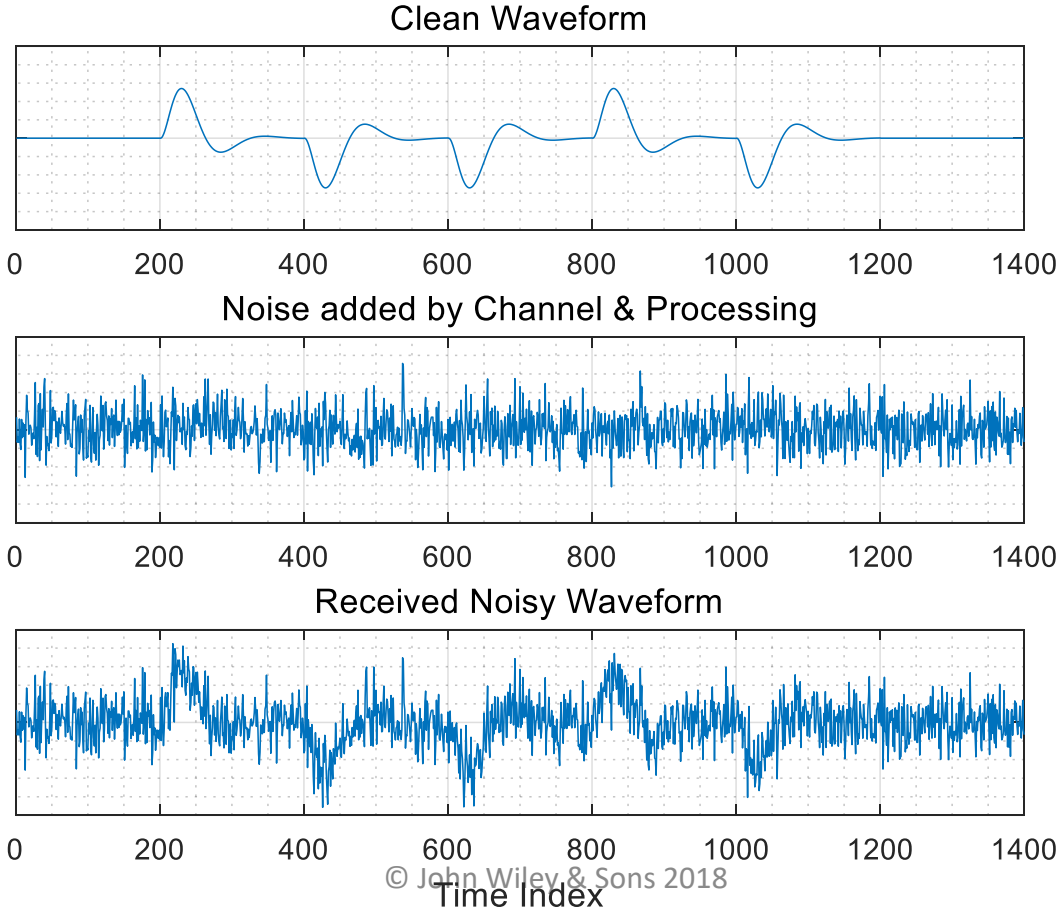

© John Wiley & Sons 2018

3.9.2. Correlate-Integrate

- Multiply incoming waveform by expected pulse shape.
  - Darbe sinyalinin ne olduğunu biliyoruz
- Integrate over one bit/symbol period.

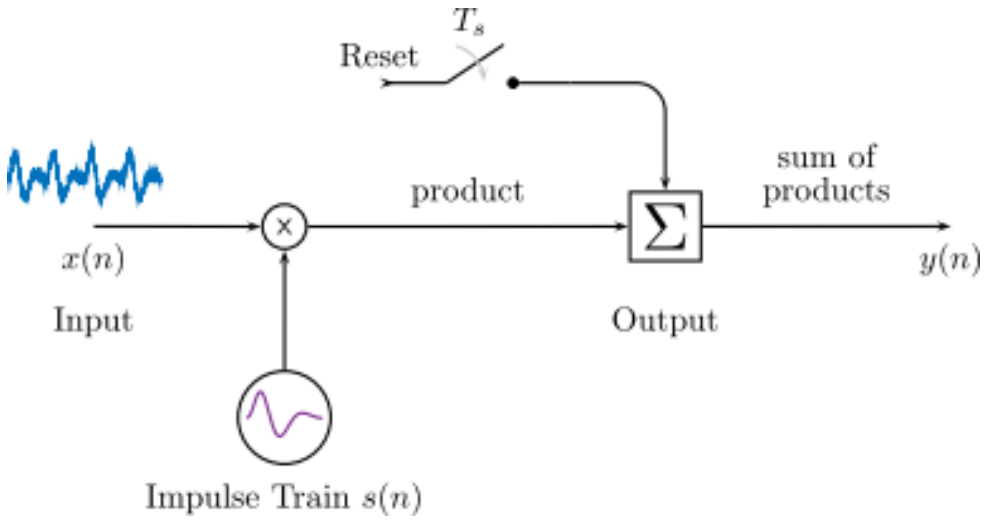

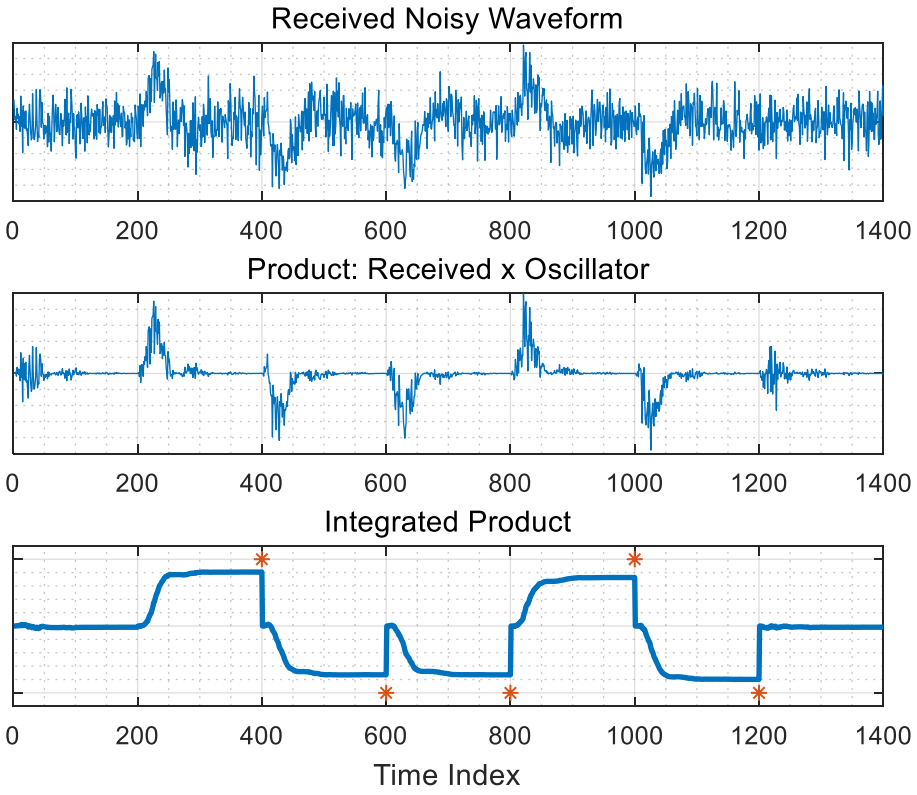

© John Wiley & Sons 2018

Matematiksel gösterim

- Multiply and sum
  - $x[n] = \alpha s[n] + g[n]$
  - $\alpha =$
  - $g[n] =$
  - $y[n] = \sum_{k=0}^{K-1} x[n-k]s[n-k]$
  - $y[n] = \ldots$

  - $n = K - 1$ alalım

3.9.2. Matched Filter

- Uses a filter which is the time-reverse of the channel impulse.
  - Bir sinyalle çarpmak yerine bir filtreden geçiriyoruz
- How does this work?

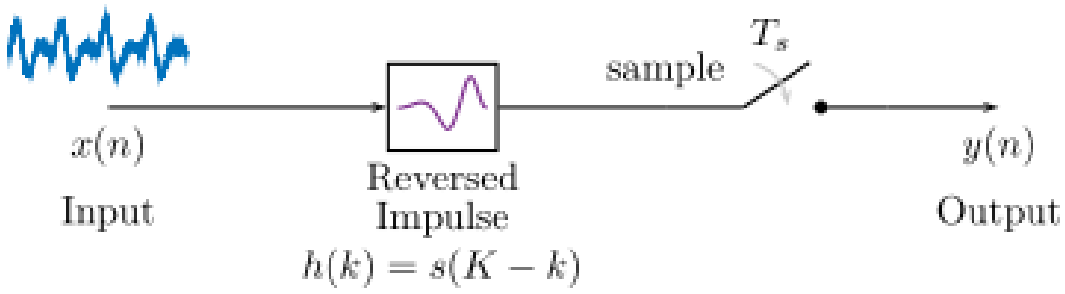

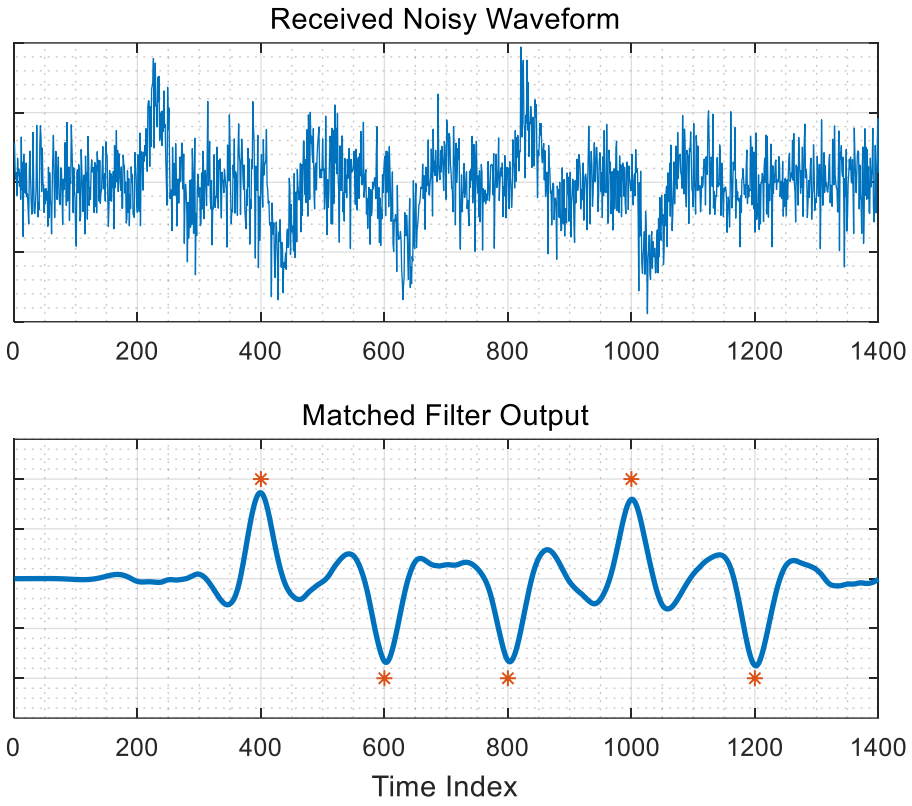

© John Wiley & Sons 2018

Correlate-Integrate & Matched Filter

- Correlate requires a waveform generator to match channel response.
- Matched filter requires a filter to perform *convolution.*
- $y[n] = \sum_{k=0}^{K-1} h[k]x[n-k]$

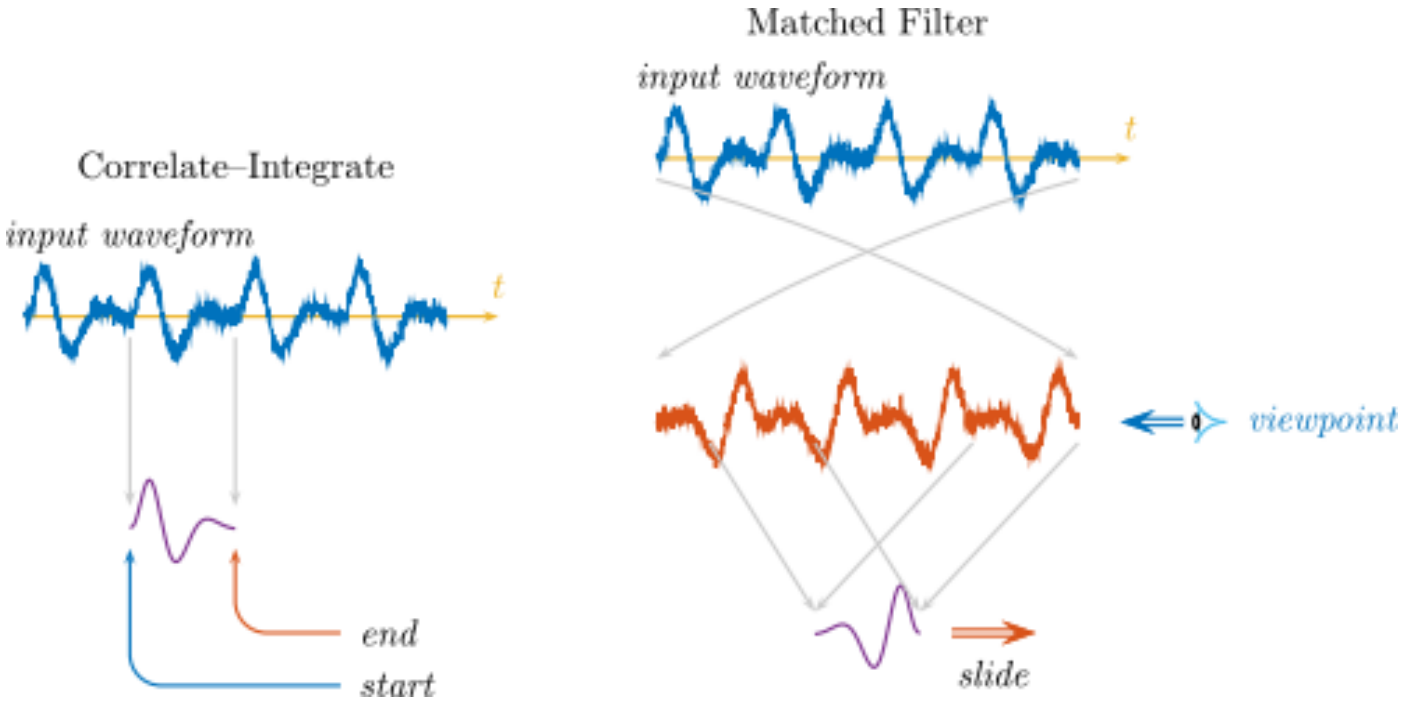

© John Wiley & Sons 2018

Filtering & Convolution

- Convolution multiples incoming signal by coefficients, adds up result.
- Then slides signal along.
- Reset işlemine gerek kalmıyor (örnekleme yapılıyor)
- MATLAB has conv() function:

```
x = [1  2  3  4  5  6  7  8];
h = [10  11  12];

conv(x, h)
ans =
   10   31   64   97  130  163  196  229  172   96
```

© John Wiley & Sons 2018

Matematiksel gösterim

- $x[n] = \alpha s[n] + g[n]$
- $y[n] = \sum_{k=0}^{K-1} h[n-k]x[k]$

Uyumlu filtre sonrası örnekleme

- Multiply - accumulate
  - Analog devreler için daha uygun
  - Uyumlu filtre dijitalde daha uygun
- Dijital haberleşmede filtre nasıl üretilir?
  - Lookup table

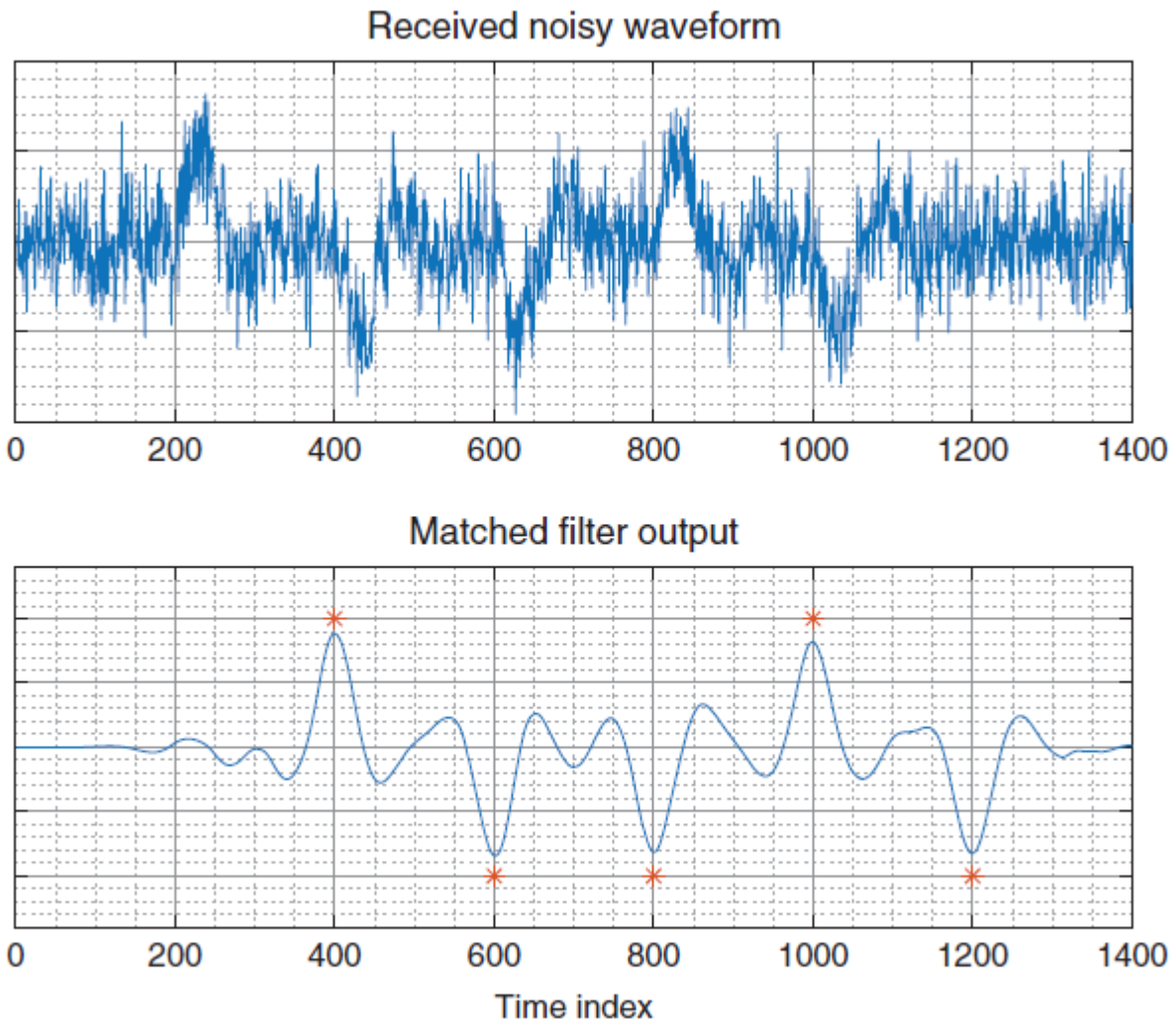

3.9.3. Dik Sinyaller

- Sayısal haberleşmede sayısal bilgi sinüs ve kosinüs sinyallerinin üzerine bindirilir
  - Bu iki sinyal birbirine karışmadan aynı kanaldan iletilebilir
  - Çünkü:
- Bazen farklı frekanslarda sinüslere yüklenir
  - Bunlar da belli şartlar altında birbirine diktir
- $\tau = \frac{1}{f}$
- $\int_0^{\tau} \cos 2\pi f t \sin 2\pi f t \, dt$

- QAM

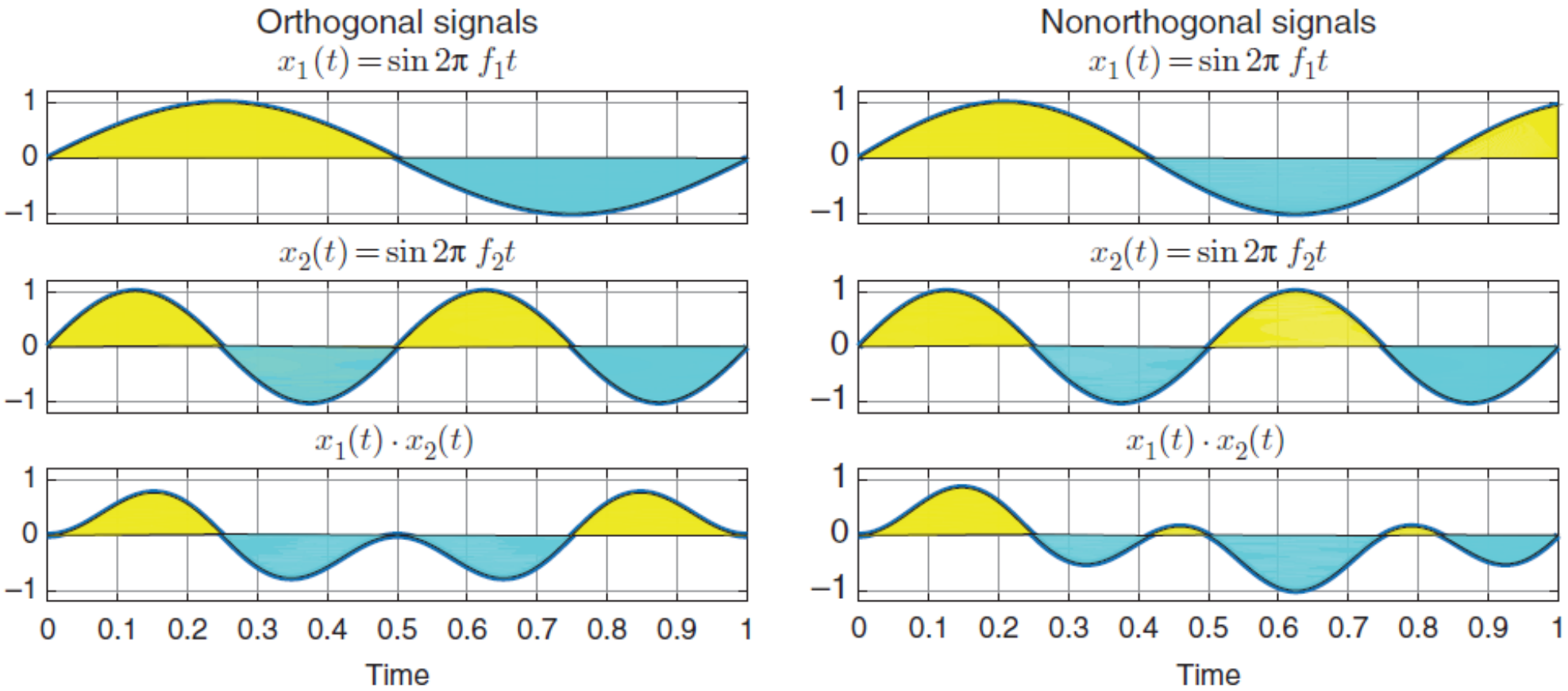

Figure 3.57 Illustrating orthogonal and nonorthogonal signals. The net area under the product of orthogonal signals is zero.

Devam…

- $\tau = \frac{1}{f}$
- $\int_0^{\tau} \cos 2\pi k f t \sin 2\pi m f t \, dt$

- Aynı anda daha çok bilgi gönderilebilir
  - OFDM

3.9.4.Quadrature Signals for Digital Modulation

- Sinüs ve kosinüs sinyalleri birbirine diktir
- Bunların ağırlıkları için 16 adet değer çifti belirlenir (tek seferde 4 bit gönderilebilir)
- İki boyutlu uzayda 16 nokta (constellation)

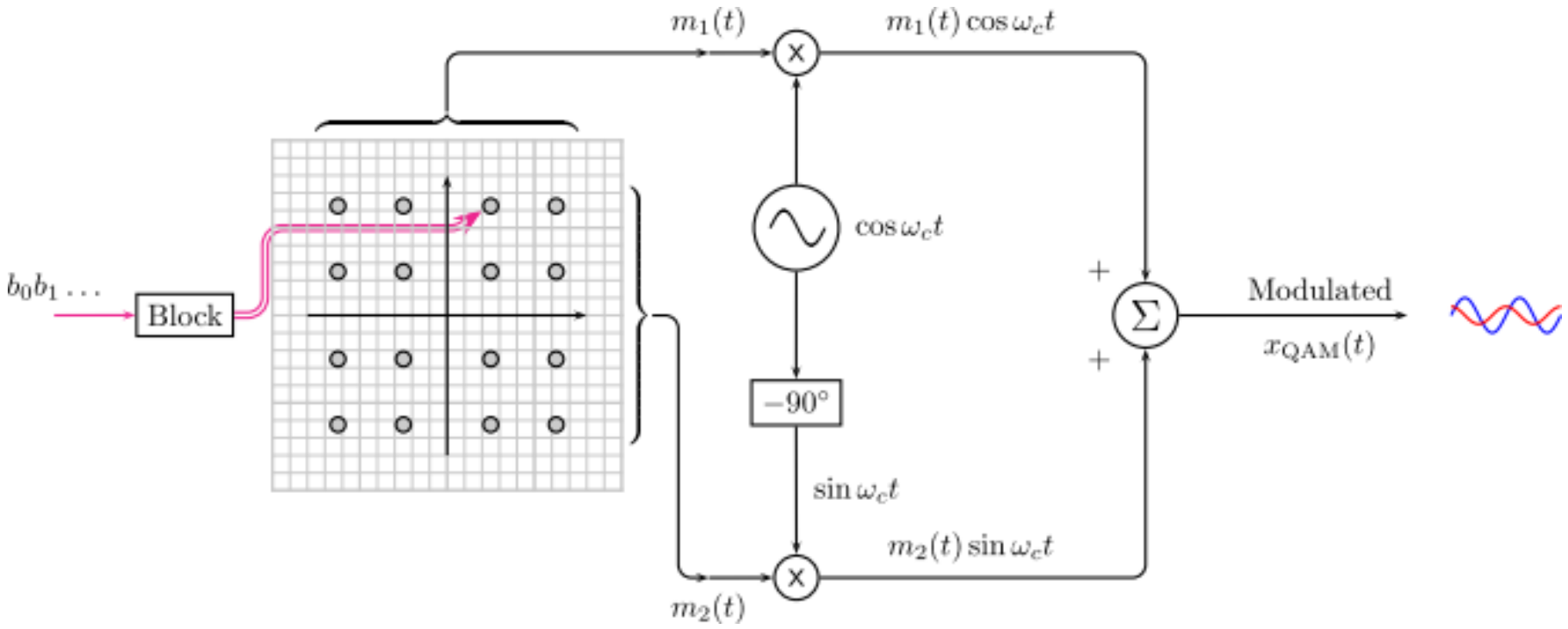

© John Wiley & Sons 2018

Quadrature Modulation

- $I \cos \omega t + Q \sin \omega t = R \cos(\omega t + \phi)$
- $R =$
- $\phi =$
- Change the phase - Quadrature Phase Shift Keying (QPSK)
- Results in a *constellation:* 2 bits or 3 bits as shown, could be more.

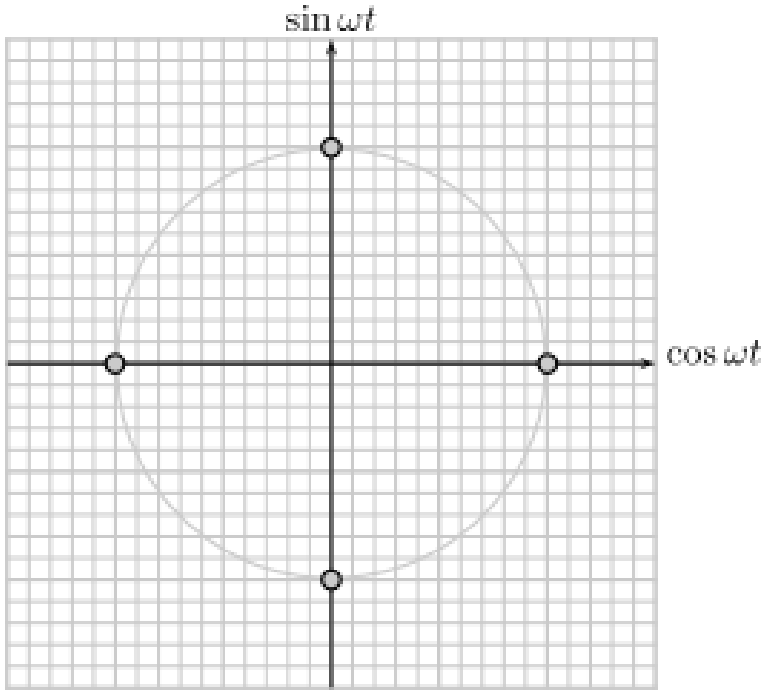

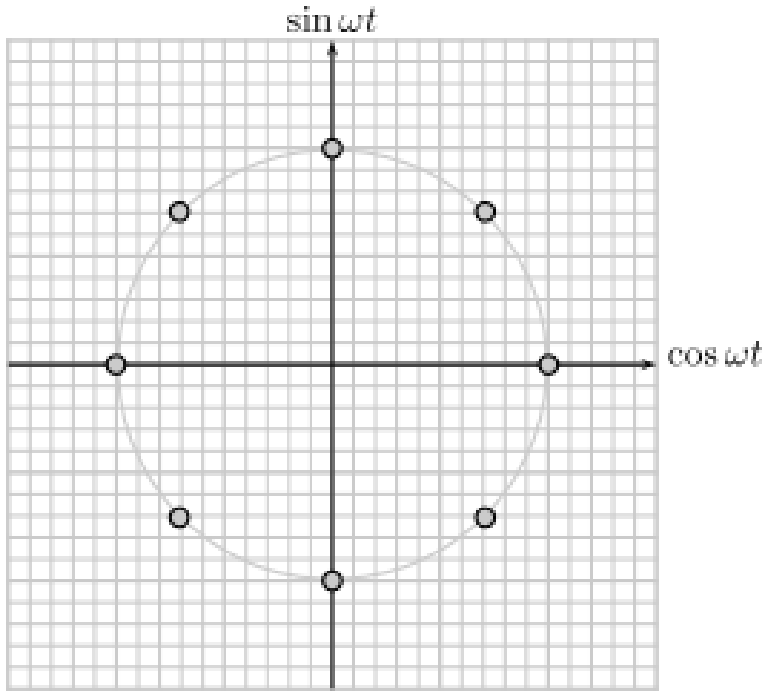

© John Wiley & Sons 2018

Quadrature Modulation

- Change the phase as well as amplitude.
- Quadrature Amplitude Modulation (QAM)
- 16 point constellation shown, could encode 4 bits at a time.
- Şekil yanlış çizilmiş!

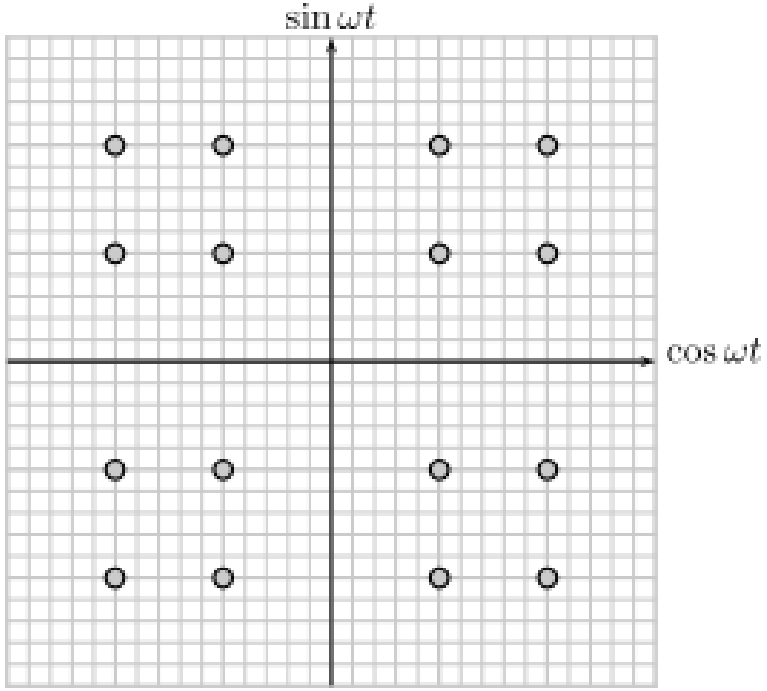

© John Wiley & Sons 2018

- $x_{QAM}(t) = m_1(t)\cos\omega t + m_2(t)\sin\omega t$

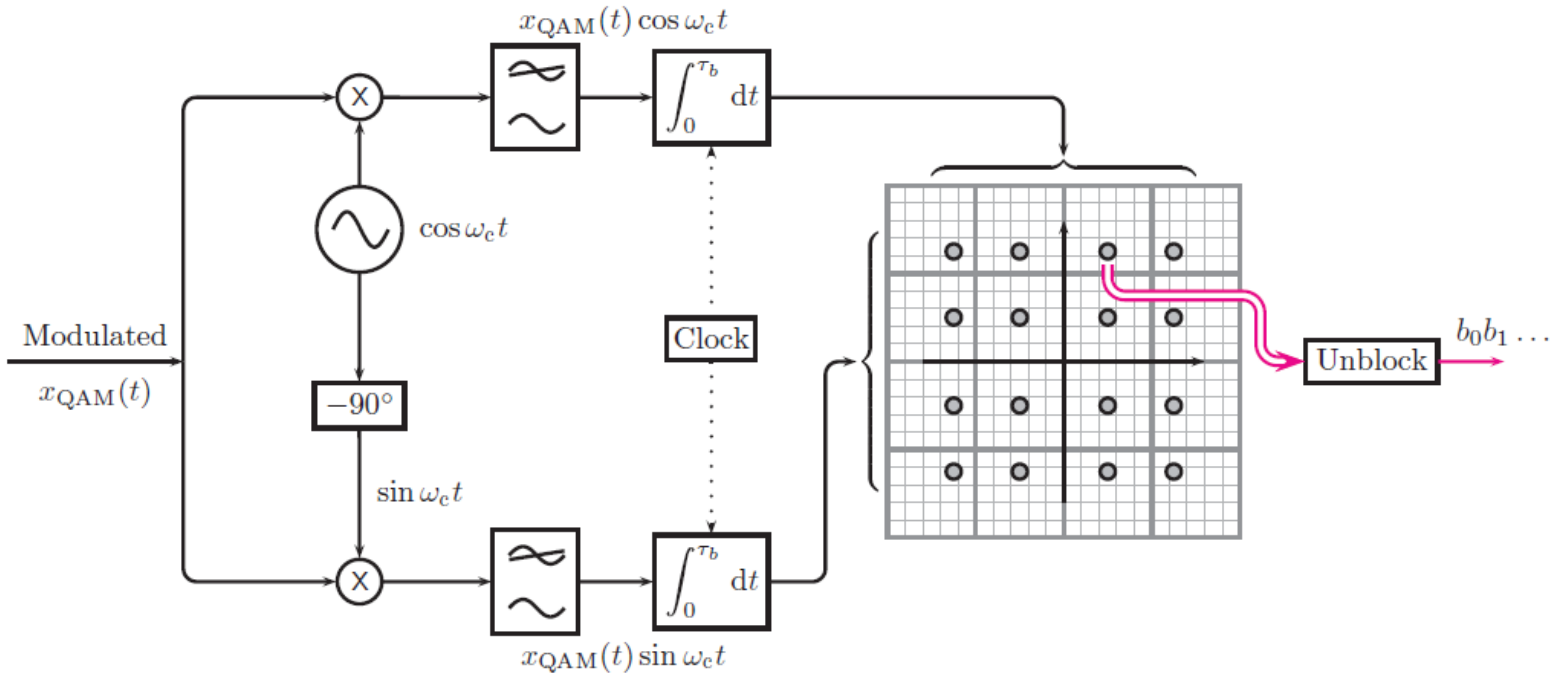

Figure 3.60 QAM demodulation. Multiplication by the sine and cosine carrier separately, followed by integration over one or more cycles, determines the amplitude and hence position in the constellation. The original bit pattern may then be looked up directly.

3.9.5. OFDM - Ort

- Semboller arası girişim $y(t) = x(t) * h(t) + n(t)$
- Kanal dürtü tepkisi h(t)
  - Semboller arası girişim yaratır
- Sembol hızı arttıkça ISI artar
  - Bant genişliği $B = \frac{1}{2T}$
  - Gecikme yayılımı
  - Tutarlılık bandı
- WiFi, LTE, 5G, ADSL, DVB, DAB… genişbant sistemler
- Orthogonal Frequency Division Multiplexing (OFDM).
  - Çok sayıda dijital veri akışı eş zamanlı iletilebilir

© John Wiley & Sons 2018

Çok Taşıyıcılı Dalga Şekilleri

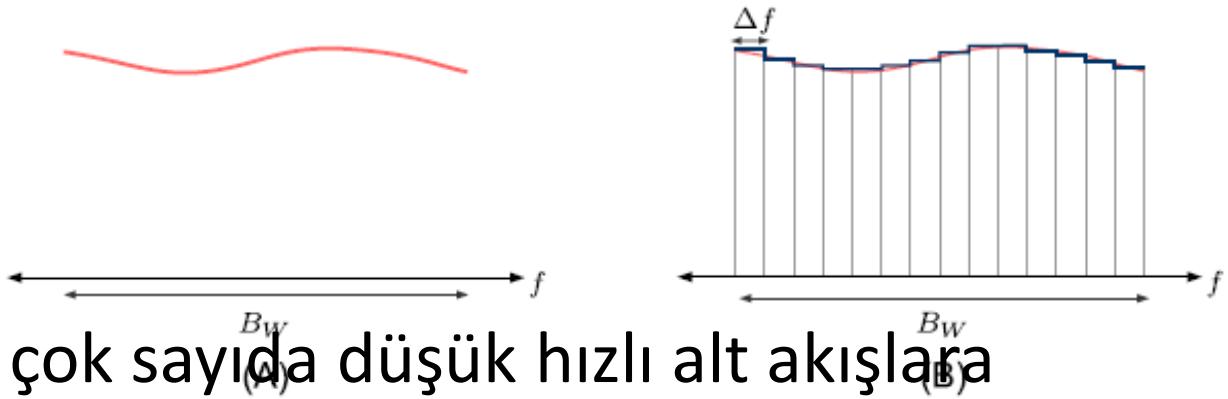

- Temel prensip: Yüksek veri hızlı bir akışı çok sayıda düşük hızlı alt akışlara bölmek ve subcarrier adında taşıyıcılarla aktarmak.
- Böylece her bir alt akışın sembol süresi uzar
- Frekans seçici kanal nedeniyle oluşan dağılım/saçılımın etkisi azalır.
  - Semboller arası girişim azalır
- Her bir alt taşıyıcı düz sönümlenmeye maruz kalır, zaman alanı kanal denkleştirmesine gerek kalmaz
- Farklı alt taşıyıcılar farklı kullanıcılara tahsis edilebilir
- Farklı alt taşıyıcılar farklı antenlere verilebilir
- Dar bant girişim sadece birkaç alt taşıyıcıyı etkiler, diğerleri etkilenmez

G12.1 Çok Taşıyıcılı İletim

- Veri hızı R, bant genişliği B
- Tutarlılık bandı $B_c < B$, (.....)
  - diğer deyişle: Kanal saçılım süresi ($T_m \simeq \frac{1}{B_c}$) sembol uzunluğundan fazla (.....)
- Çözüm: Kanal $N = B/\mathrm{B}_N$ adet altkanala bölünür
  - Veri N adet paralel veriye ayrılır ve ayrıca kiplenir (veri hız.....)
  - Yeni sembol süresi $T_N = \frac{1}{B_N} \gg \frac{1}{B_c} = T_m$ (.....)
  - Dezavantaj
    - Frekans bantları birbirine karışmaması için $B = \frac{N(1+\beta+\varepsilon)}{T_N}$
    - Keskin filtreler gerekir
  - Ör 1. W=1MHz, $T_m = 20\mu s$, $N =?$
  - Ör 2. $T_N = 0.2ms$, $T_N \gg T_m$ $N = 128,, \beta = 1, \varepsilon = 0.1,$ $B =?$

G12.1 Çok Taşıyıcılı İletim

- İletilen sinyal: $s(t) =$

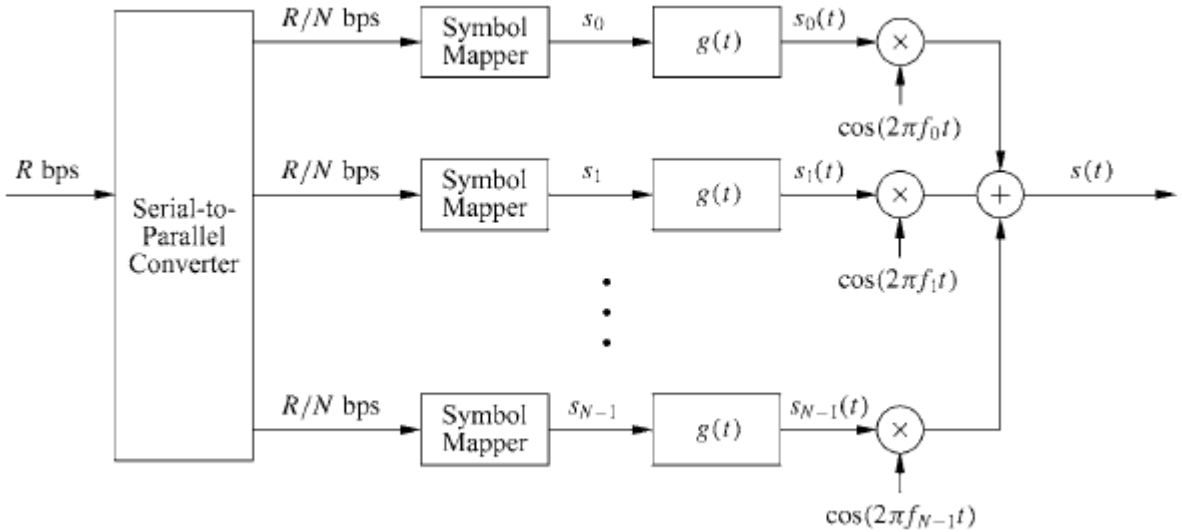

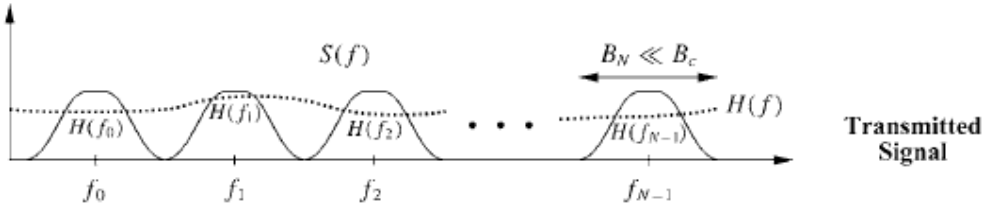

- Alıcı yapısı

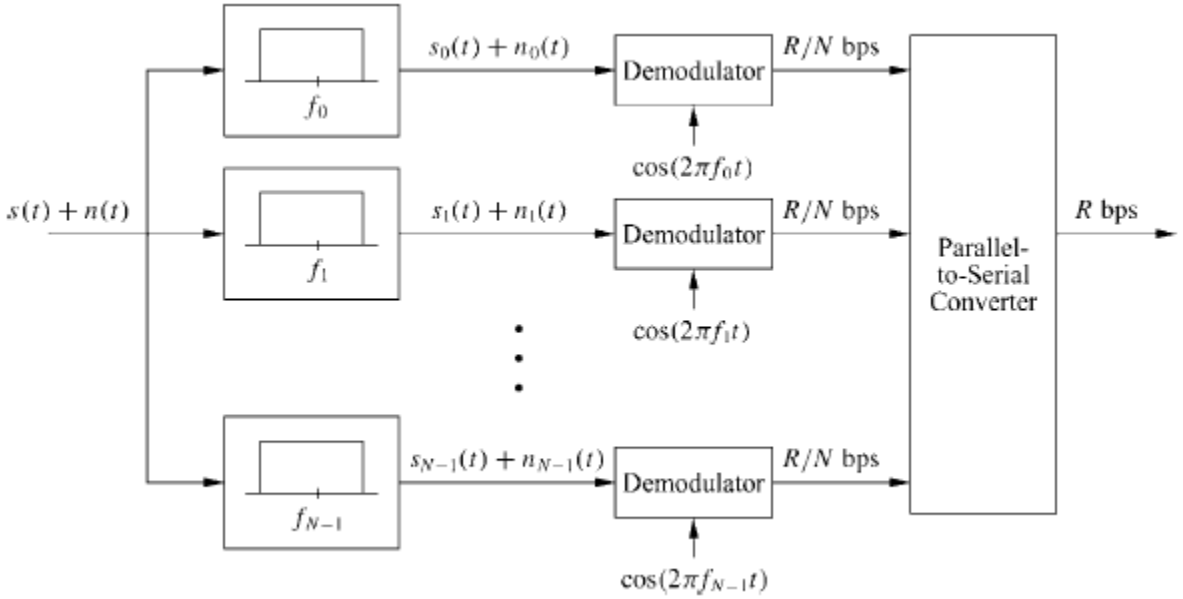

G12.2 Örtüşen Kanallar

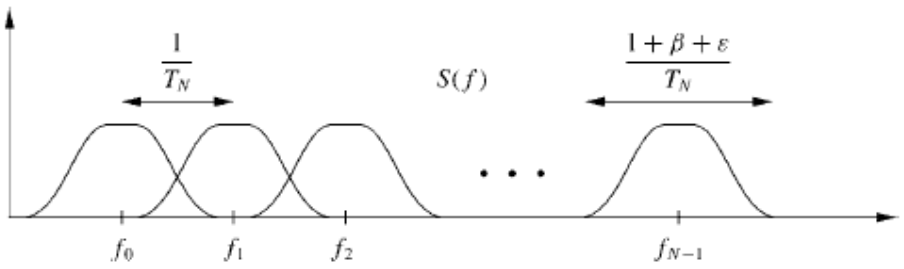

- $x_i(t) = \cos\left(2\pi\left(f_o + \frac{i}{T_N}\right)t + \phi_i\right), i = 0,1,\dots,N-1$
  - $1/T_N$ frekans aralığı
- $i \neq j$ $için$ $\frac{1}{T_N}\int_0^{T_N} x_i(t)x_j(t)\,dt = 0,\ f_i - f_j = \frac{i-j}{T_N}, n = 1,2,\dots$

- Gerekn bant genişliği $B = \frac{N+\beta+\varepsilon}{T_N} \simeq \cdots$

EXAMPLE 12.3: Compare the required bandwidth of a multicarrier system with overlapping subchannels versus nonoverlapping subchannels using the same parameters as in Example 12.2.

12-1. Show that the minimum separation Δf for subcarriers $\{\cos(2\pi j\Delta f t+\phi_j), j = 1, 2, \dots\}$ to form a set of orthonormal basis functions on the interval $[0, T_N]$ is $\Delta f = 1/T_N$ for any initial phase ϕ_j. Show that if $\phi_j = 0$ for all j then this carrier separation can be reduced by half.

12-2. Consider an OFDM system operating in a channel with coherence bandwidth $B_c =$ 10 kHz.

(a) Find a subchannel symbol time $T_N = 1/B_N = 10T_m$, assuming $T_m = 1/B_c$. This should ensure flat fading on the subchannels.

(b) Assume the system has $N = 128$ subchannels. If raised cosine pulses with $\beta = 1.5$ are used and if the required additional bandwidth (from time limiting) to ensure minimal power outside the signal bandwidth is $\varepsilon = .1$, then what is the total bandwidth of the system?

(c) Find the total required bandwidth of the system using overlapping carriers separated by $1/T_N$, and compare with your answer in part (b).

12-4. Consider a data signal with a bandwidth of .5 MHz and a data rate of .5 Mbps. The signal is transmitted over a wireless channel with a delay spread of 10 μs.

(a) If multicarrier modulation with nonoverlapping subchannels is used to mitigate the effects of ISI, approximately how many subcarriers are needed? What is the data rate and symbol time on each subcarrier? (We do not need to eliminate the ISI completely, so $T_s = T_m$ is sufficient for ISI mitigation.)

Assume for the remainder of the problem that the average received SNR (γ_s) on the nth subcarrier is $1000/n$ (linear units) and that each subcarrier experiences flat Rayleigh fading (so ISI is completely eliminated).

(b) Suppose BPSK modulation is used for each subcarrier. If a repetition code is used across all subcarriers (i.e., if a copy of each bit is sent over each subcarrier), then what is the BER after majority decoding? What is the data rate of the system?

(c) Suppose you use adaptive loading (i.e., different constellations on each subcarrier) such that the average BER on each subcarrier does not exceed 10^{-3} (this is averaged over the fading distribution; do not assume that the transmitter and receiver adapt power or rate to the instantaneous fade values). Find the MQAM constellation that can be transmitted over each subcarrier while meeting this average BER target. What is the total data rate of the system with adaptive loading?

G12.4 Gerçeklenme – DFT ve özellikleri

- $DFT\{x[n]\} = X[i] = \frac{1}{\sqrt{N}} \sum_{k=0}^{N-1} x[n] e^{-j\frac{2\pi n i}{N}}, i = 0, \dots, N-1$
- $DFT\{X[i]\} = x[n] = \frac{1}{\sqrt{N}} \sum_{k=0}^{N-1} X[i] e^{j\frac{2\pi n i}{N}}, n = 0, \dots, N-1$
- Gerçekleme: Fast Fourier Transform
- Mesaj kanaldan geçerken (evrişim)
  - $y(t) = x(t) * h(t)$
  - Örnekleme sonucunda $y[n] = h[n] * x[n] = x[n] * h[n]$ …
- Dairesel evrişim
  - $y'[n] = h[n] \blacksquare x[n] = \sum_{i=0}^{N-1} h[k] x[mod_N(n-k)]$
  - Frekans alanında çarpıma karşılık gelir
- $Y[i] = DFT\{y[n] = h[n] \blacksquare x[n]\} = X[i]H[i], i = 0, \dots, N-1$
- Alıcıda $X[i] = \frac{Y[i]}{H[i]} \dots ?$

G12.4.2 Çevrimsel Önek

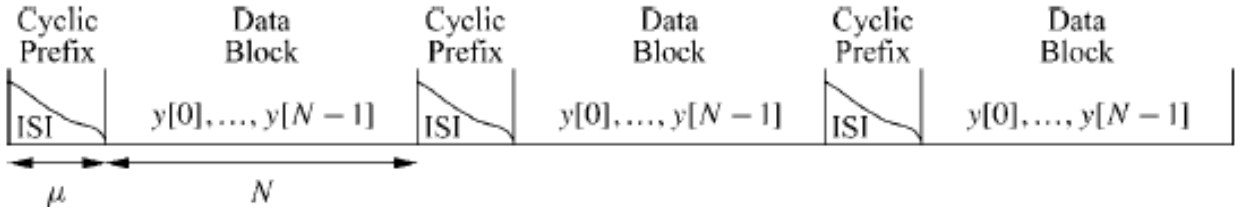

- Alıcıda $y[n] = h[n] * x[n]$
  - Direkt DFT uygulanırsa $\mathrm{Y[i]} = X[i]H[i]$ elde edilemez , çünkü dairesel evrişim değildir.
  - Normal evrişimi dairesele çevirmek Çevrimsel ön ek (cyclic prefix)
- Cyclic Prefix
  - Kanal uzunluğu $\mu + 1$ olsun $h[n] = h[0] \dots h[\mu]$ şeklinde bir filtre denebilir
  - x[n] serisinin son μ elemanını baş tarafına kopyalarız ( )
  - Bu durumda $h[n] * \bar{x}[n] = h[n] \blacksquare x[n]$ olur (Göster)

  - Sistem tasarımı basitleşir (Alıcıda $X[i] = Y[i]/H[i]$)
  - Bu aynı zamanda ISI'ı yok eder.
  - Ancak ek yük de oluşur

EXAMPLE 12.4: Consider an OFDM system with total bandwidth $B = 1$ MHz assuming $\beta = \varepsilon = 0$. A single-carrier system would have symbol time $T_s = 1/B = 1\ \mu$s. The channel has a maximum delay spread of $T_m = 5\ \mu$s, so with $T_s = 1\ \mu$s and $T_m = 5\ \mu$s there would clearly be severe ISI. Assume an OFDM system with MQAM modulation applied to each subchannel. To keep the overhead small, the OFDM system uses $N = 128$ subcarriers to mitigate ISI. So $T_N = NT_s = 128\ \mu$s. The length of the cyclic prefix is set to $\mu = 8 > T_m/T_s$ to ensure no ISI between OFDM symbols. For these parameters, find the subchannel bandwidth, the total transmission time associated with each OFDM symbol, the overhead of the cyclic prefix, and the data rate of the system assuming $M = 16$.

G12.4.3: OFDM

- Seri-Paralel dönüşüm
- $\mathrm{X[i]}, i = 0, \dots, N-1$ göndereceğimiz semboller olsun (QAM, PSK..).
- Bunların IDFT'sini alırız x[n]= $\frac{1}{\sqrt{N}} \sum_{k=0}^{N-1} X[i] e^{j\frac{2\pi ni}{N}}, n = 0, \dots, N-1$
  - Çok taşıyıcılı $x(t) = \sum_{i=0}^{N} X[i] e^{j2\pi it/T_N}$ sinyalinin $t = \frac{nT}{N}$ zamanlarındaki örnekleri oluşur.
  - Sayısal – analog çeviriciden geçirilerek $x(t)$ oluşturulur.
- Çevrimsel önek eklenir
- Paralel – seri dönüşüm ( )
- Sayısal – Analog dönüşüm ( )
- Taşıyıcı frekansa taşınır
- Kanal ( )
- DFT
- Sadece sıfırlardan oluşan CP de kullanılabilir

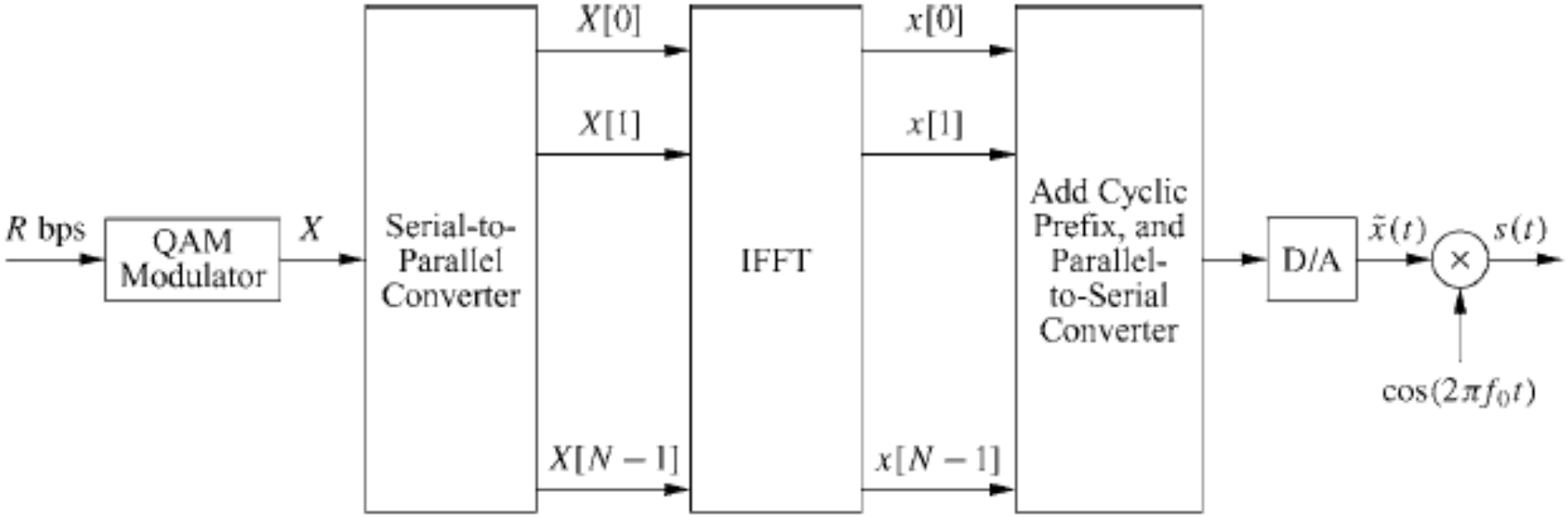

Transmitter

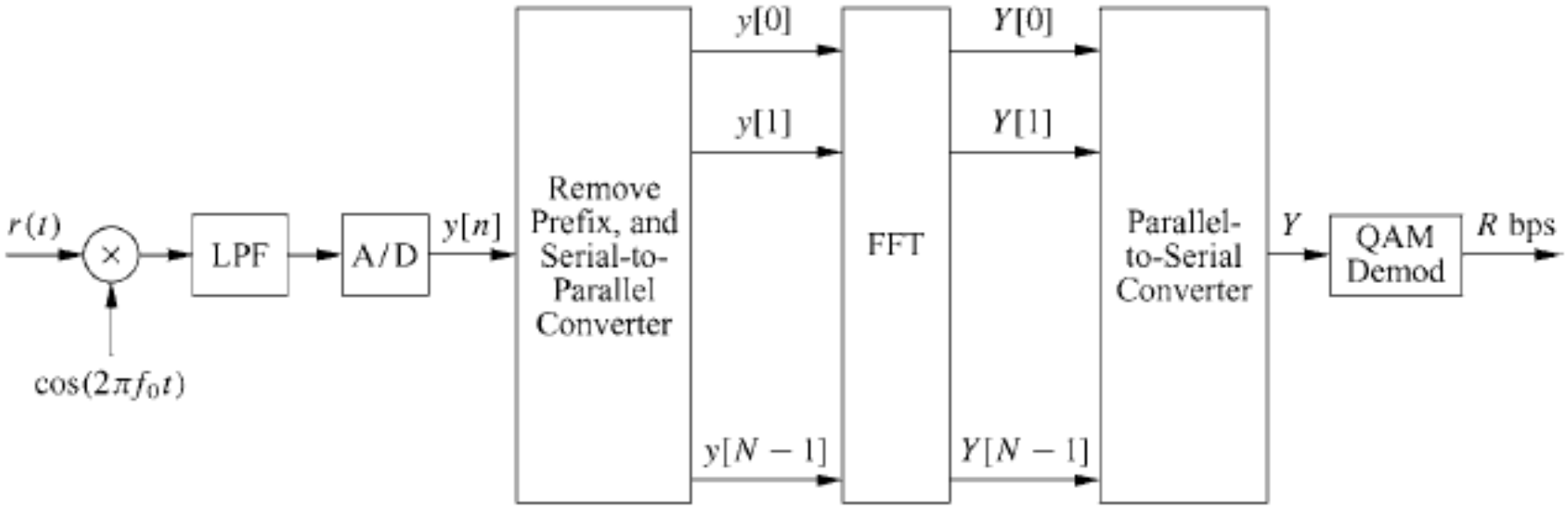

Receiver

11.6 OFDM- WIFI

- IEEE 802.11a Wireless LAN: , 5GHz bölgesinde
  - 300MHz bant genişliğinde
  - 20Mhz bantlara ayrılmış
- IEEE 802.11g : 2.4 GHz ISM bölgesinde
  - Diğer özellikleri aynı
- N=64 taşıyıcı, 48 tanesi veri iletiminde kullanılır
  - Dıştaki 12 tanesi girişim yaratmamak için kullanılmaz
  - Çevrimsel ön ek: $\mu = 16$
  - Hata düzelten kodlar: Evrişimsel r=1/2, 2/3, ¾
  - Kipleme: BPSK, QPSK, 16-QAM, 64-QAM
  - $B_N = \frac{20\ MHz}{64} = 312.5\ kHz$
  - $T_m = 16T_s = \frac{16}{20MHz} = 0.8\mu s$
  - $T_N = (16 + 64) \times T_s = 4\mu s$
- $R_{min} = 48\ taşıyıcı \times \frac{0.5\ kod\ oranı \times 1 bit/sembol}{4 \times 10^{-6} sn} = 6\text{Mbps}$
- $R_{max} = 48\ taşıyıcı \times \frac{0.75\ kod\ oranı \times 6\ bit/sembol}{4 \times 10^{-6} sn} = 54\text{Mbps}$

OFDM - ADSL: Asymmetric Digital Subscriber Line

- Telefon hattından (burgulu çift) Internet bağlantısı
- 3km hat: 1.2 MHz bant genişliği
- Bandın çoğu aşağı gönderime ayrılır (asimetrik: 4km→ (6.8, 0.64), 6km→(1.544, 0.176))
- 256 OFDM alttaşıyıcısı $\Delta_f = 1.104 \times \frac{10^6}{256} = 4.3125\ kHz$
  - Çevrimsel Önek: $\frac{N}{16} = 32\ \ddot{o}rnek$
- Kipleme: QPSK, 16 QAM, 64 QAM, 256 QAM, …

OFDM - DAB

- AM ve FM yerine
- Eureka – 147 standardı – ITU ve ETSI
- QPSK
- Mod 1: VHF, OFDM, N=1536, $\Delta f = 1kHz, CP = 246\mu sec$ (Yer)
- Mod 2: 3GHz, OFDM, N=192, $\Delta f = 8kHz, CP = 31\mu sec$ (Uydu)
- MPEG ses sıkıştırma (CD kalitesinde)

OFDM - LTE

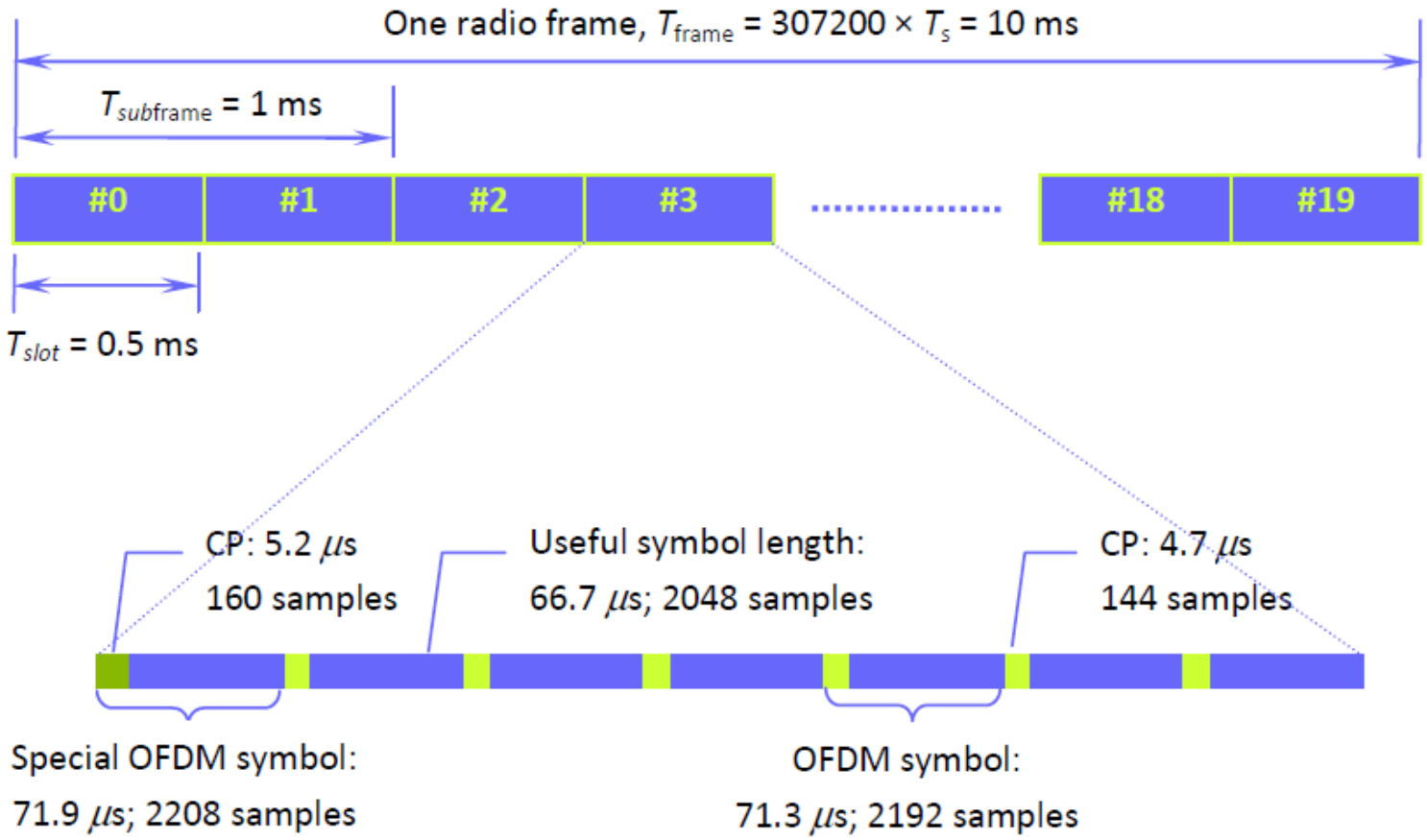

Values shown for normal CP assignment; Δf = 15 kHz

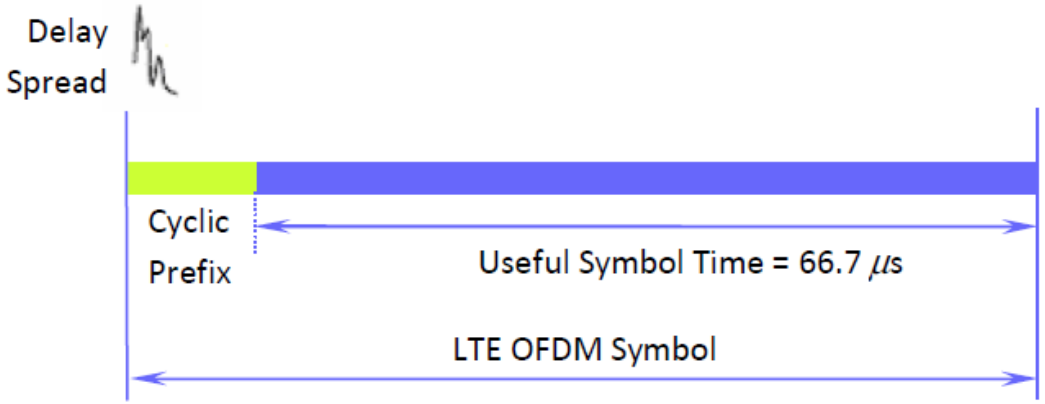

Spread Spectrum

- Original approach to telecommunications: use as narrow a bandwidth as possible.
- Spread Spectrum (SS) idea: to spread the signal over a wider band.
- Why? Several reasons…
  - Interference usually only affects part of the message, so it could be recovered.
  - Reduces possibility of snooping (eavesdropping) on a transmission.
  - Makes it easier to share a channel without co-ordination (cellular radio).

© John Wiley & Sons 2018

Spread Spectrum

- Frequency Hopping: use a frequency that changes in a pseudo-random way.
- Dwell time much longer than a single bit.

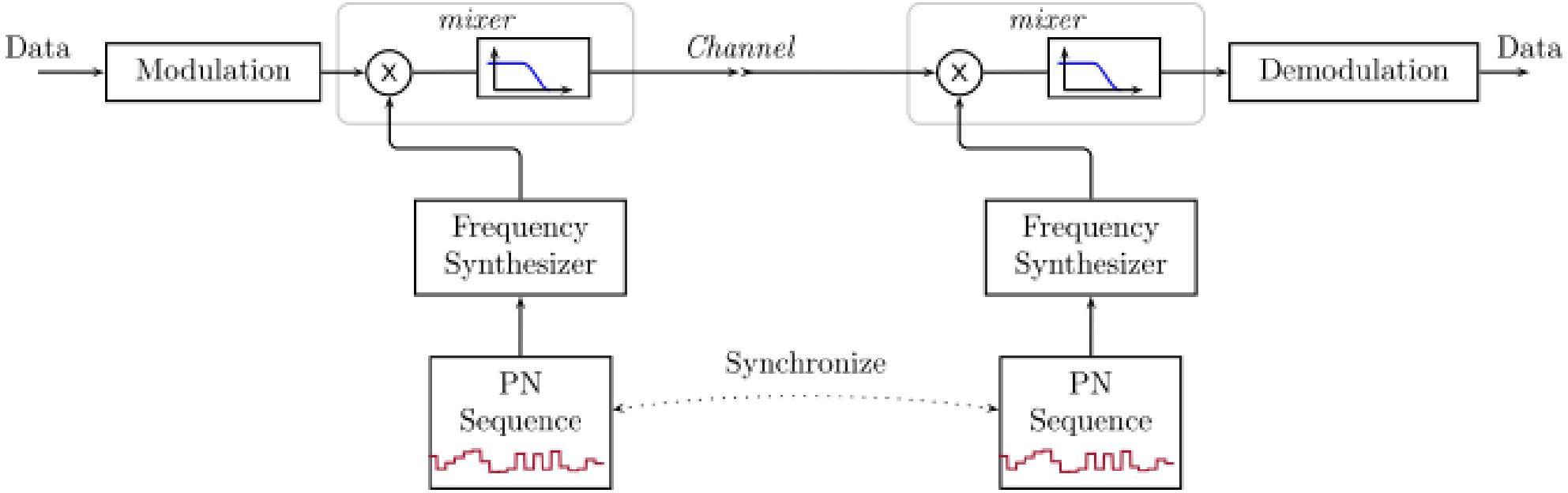

© John Wiley & Sons 2018

Spread Spectrum

- Direct Sequence: use a frequency that changes in a pseudo-random way but very fast (several times per bit).

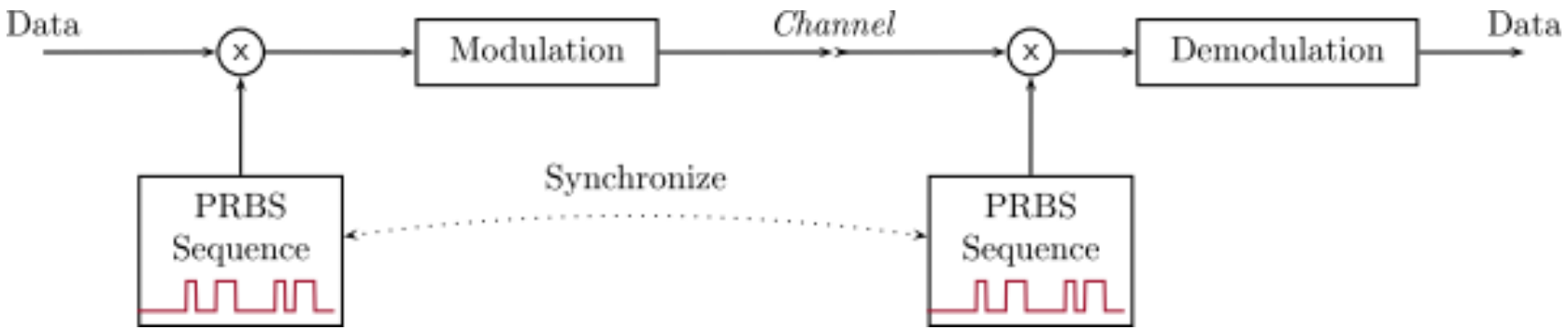

© John Wiley & Sons 2018

3.1 Modulation is the process of impressing a modulation signal $m(t)$ onto a carrier $x_c(t)$ in some way. Typically the amplitude, frequency, or phase of the carrier is manipulated in some way.

a) Explain how each of the modulation types shown in Figure 3.80a comes about.

b) Define each of the modulation types shown in Figure 3.80b. Explain your reasoning in each case.

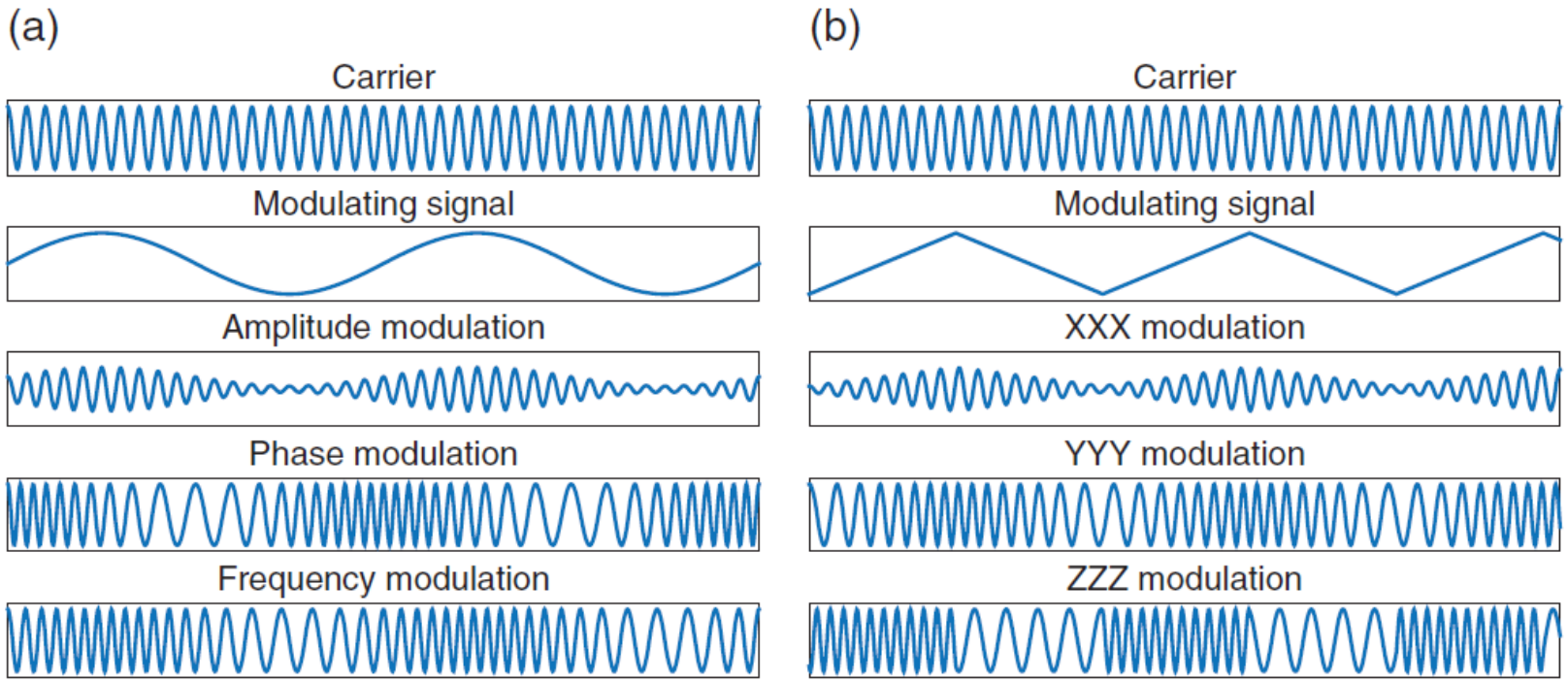

3.2 Use Equations (3.28) and (3.29) to show mathematically that, given an AM waveform, A_c and A_m may be determined from the waveform graph.

3.3 Starting with the expansion for $\sin x \sin y$, show that amplitude modulation results in a carrier with amplitude A_c and two sidebands at $\omega_c \pm \omega_m$, each of amplitude $(A_m/2)$.

3.4 The sidebands in AM carry significant power, and their power depends on the modulation index.

a) Write an equation for the power in the carrier in terms of the carrier amplitude A_c.

b) Write an equation for the power in each sideband in terms of the sideband amplitude A_m.

c) Using the above results, show that the total power present in an AM waveform is the carrier power multiplied by a factor of $[1 + (\mu^2/2)]$.

d) Defining the efficiency η as the power in the sidebands divided by the total power, show that $\eta = \mu^2/(\mu^2 + 2)$. Comment on the efficiency when the modulation index is zero, and when the modulation index is unity.

3.5 Verify the parameters of the waveforms shown in Figure 3.81 using the spectrum plots only.

3.6 Figure 3.82 shows the spectrum analyzer display of an amplitude modulated waveform. At 600 kHz the power is -9.99 dBm, while at 620 kHz the power is -24.93 dBm. Given that the modulation index is $\mu = 0.4$, does the relative power difference as measured correspond to what would be expected from theory?

3.7 Figure 3.83 shows the spectrum analyzer plot of an FM signal with the following parameters:

Parameter name	Symbol	Value
Carrier frequency	f_c	600 kHz
Carrier amplitude	A_c	200 mVpp
Modulating frequency	f_m	20 kHz
Frequency deviation	Δf	80 kHz

Determine β, and from that the expected power levels of the carrier and three harmonics above the carrier.

3.8 Show mathematically that the block diagram of Figure 3.84 can produce upper and lower sidebands. Explain all steps involved.

3.9 A square-law demodulator for AM simply squares the incoming signal, then filters the result. Show mathematically how the square-law operates on the basic AM equation using a single-tone modulation. Determine the magnitude of the frequency components of the squared signal that

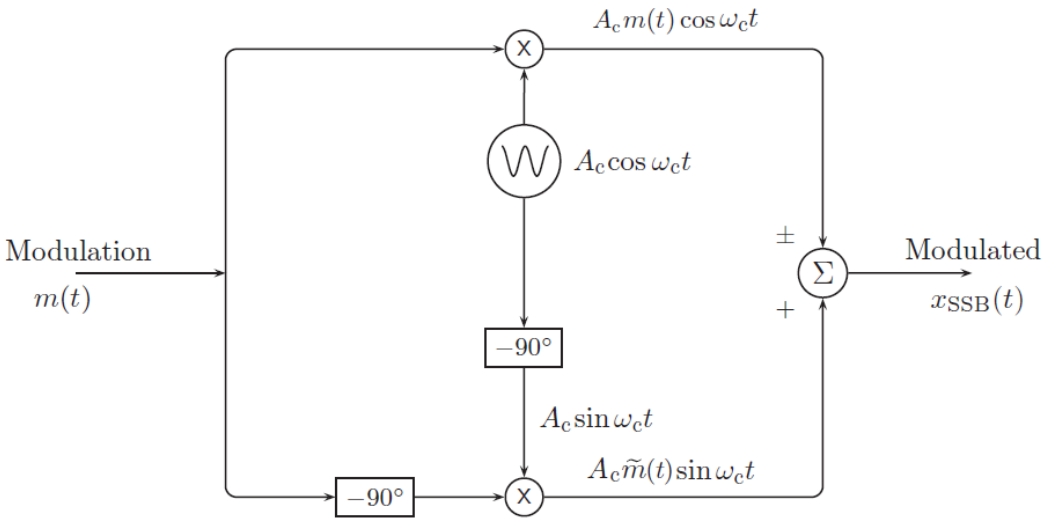

Figure 3.84 Single-sideband (SSB) generation.

would be within the range of the modulating signal's bandwidth. Which is the desired (demodulated) signal and which is unwanted distortion?

3.10 Explain how Bessel tables (Table 3.2) are used to determine the harmonics of an FM waveform.

3.11 Verify the spectral components of the waveforms shown in Figure 3.85 using the parameters given in conjunction with the table of Bessel functions (Table 3.2).

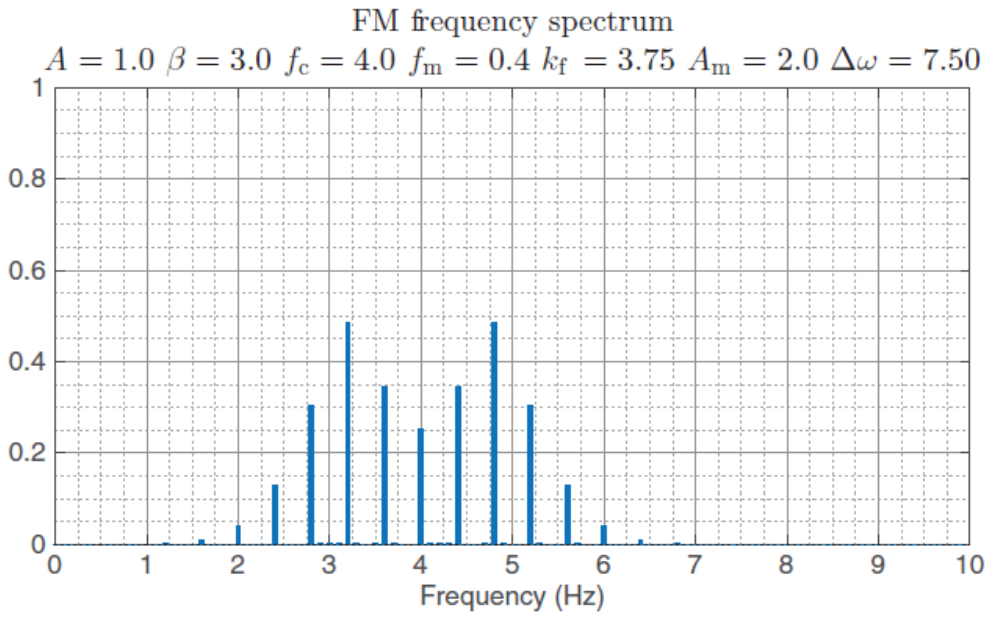
FM frequency spectrum
$A = 1.0$ $\beta = 3.0$ $f_c = 4.0$ $f_m = 0.4$ $k_f = 3.75$ $A_m = 2.0$ $\Delta\omega = 7.50$
Frequency (Hz)

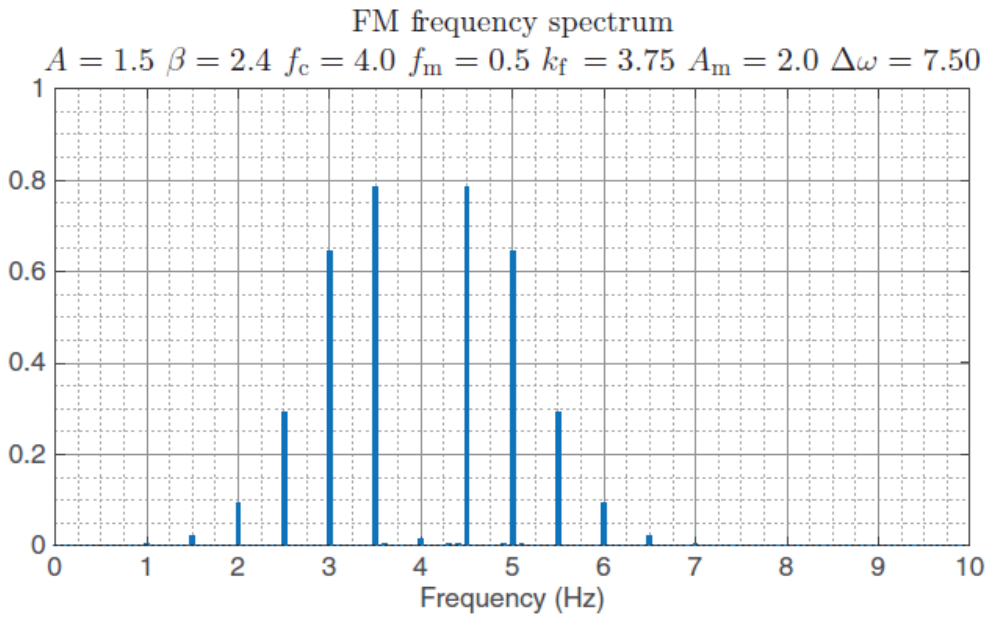
FM frequency spectrum
$A = 1.5$ $\beta = 2.4$ $f_c = 4.0$ $f_m = 0.5$ $k_f = 3.75$ $A_m = 2.0$ $\Delta\omega = 7.50$
Frequency (Hz)

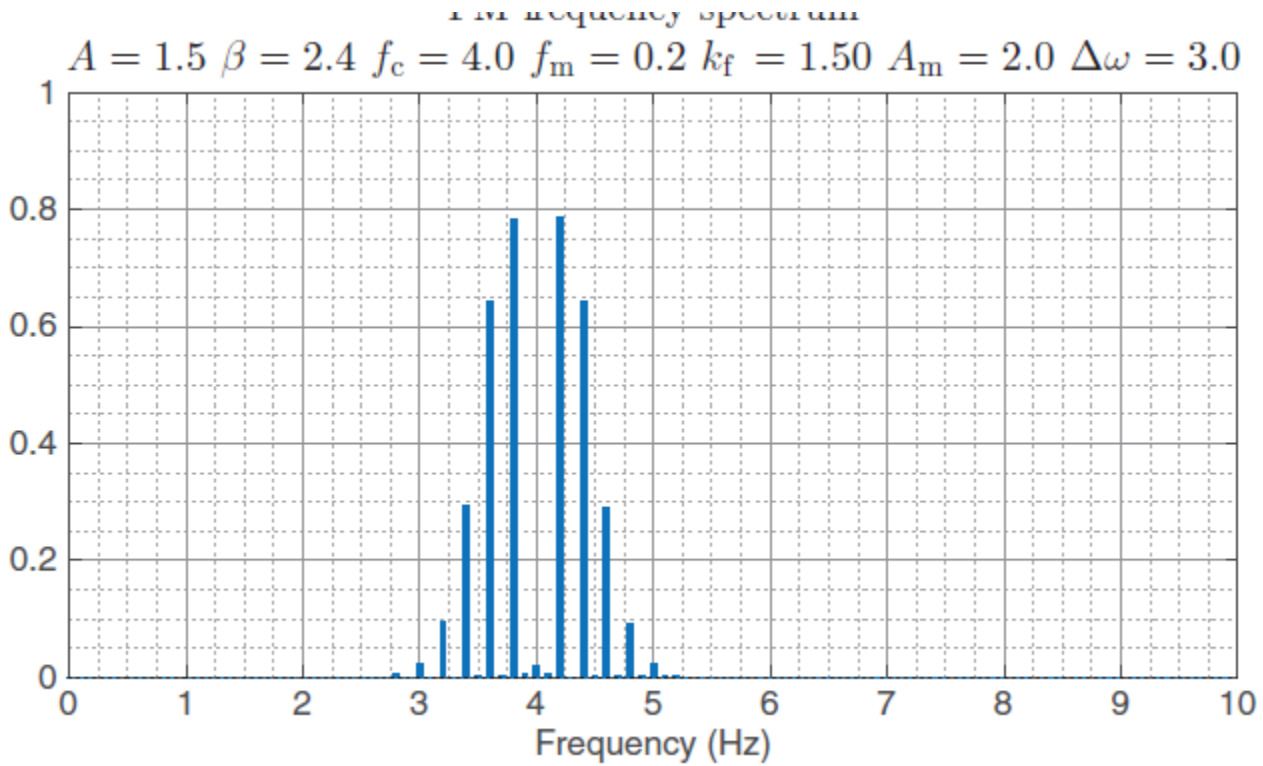
$A = 1.5$ $\beta = 2.4$ $f_c = 4.0$ $f_m = 0.2$ $k_f = 1.50$ $A_m = 2.0$ $\Delta\omega = 3.0$
Frequency (Hz)

3.12 A single-tone frequency modulated signal written as

$$x_{\mathrm{FM}}(t) = 2\sin(2000\pi t + 2\sin 4\pi t)$$

has corresponding frequency components

$$x_{\mathrm{FM}}(t) = A \sum_{n=-\infty}^{n=\infty} J_n(\beta)\sin(\omega_{\mathrm{c}} + n\,\omega_{\mathrm{m}})t$$

a) Work out the carrier and modulation frequencies in rad s^{-1} and Hz.
b) What is the value of β? Determine the corresponding frequency deviation.
c) Sketch the magnitude spectrum about the carrier frequency, showing all values of amplitude and frequency.
d) What would the spectrum look like if the frequencies were in MHz rather than Hz?

3.13 *IQ* demodulation may be applied to various modulation schemes, assuming that the carrier is able to be reconstructed at the receiver.

a) Section 3.8.1 showed how to demodulate a sinusoidal tone when amplitude modulated. Extend this to show how to demodulate any modulation input $m(t)$ that is amplitude modulated.
b) Section 3.8.2 showed how to demodulate a sinusoidal tone when phase modulated. Extend this to show how to demodulate any modulation input $m(t)$ that is phase modulated.
c) Section 3.8.3 showed how to demodulate a sinusoidal tone when frequency modulated. Extend this to show how to demodulate any modulation input $m(t)$ that is frequency modulated.

3.14 To prove that demodulation works for orthogonal signals, assume that the in-phase signal is $I(t)$ and the quadrature-phase signal is $Q(t)$. Then the resulting signal is the sum of these multiplied by their respective carriers, to yield a received signal

$$r(t) = Q\cos\omega t + I\sin\omega t$$

a) By multiplying the received $r(t)$ by the sine carrier $\sin\omega t$ and then integrating and averaging over one cycle time $\tau = (2\pi/\omega)$, prove that

$$\frac{2}{\tau}(Q\cos\omega t + I\sin\omega t)\sin\omega t = I$$

In this way, the I component may be recovered.

b) Similarly, show that multiplying by $\cos\omega t$, integrating and averaging,

$$\frac{2}{\tau}(Q\cos\omega t + I\sin\omega t)\cos\omega t = Q$$

which then recovers the Q component.