13.33 Determine the input impedance of the air-core transformer circuit of Fig. 13.102.

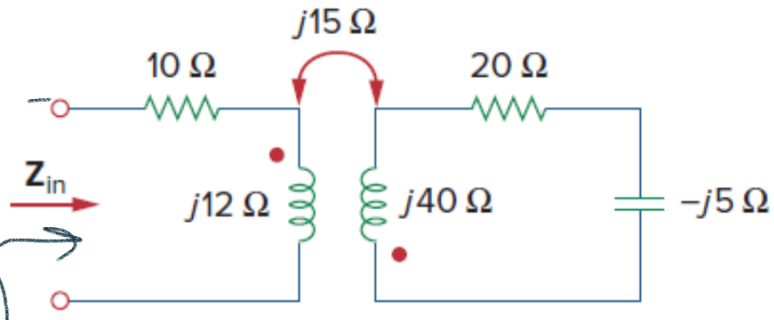

Figure 13.102
For Prob. 13.33.

$$Z_{in} = 10 + j12 + \frac{15^2}{20 + j35}$$

$$= \frac{200 + j350 + j240 - 420 + 225}{20 + j35}$$

$$= \frac{5 + j590}{20 + j35} = \frac{1 + j118}{4 + j7} = \frac{118\angle 90^\circ}{\sqrt{65}\angle 60.25}$$

$$Z_{in} = 14.64\angle 29.75^\circ \ \Omega$$

İdeal Trafolar

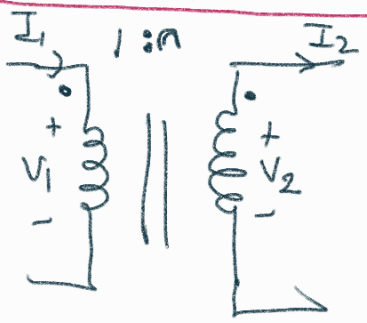

V_1 , V_2

I_1 , I_2

$$\frac{|V_2|}{|V_1|} = n \qquad \frac{|I_1|}{|I_2|} = n$$

Nokta kuralı:

- Hem $\overline{V_1}$ hem de $\overline{V_2}$ noktalı tarafta aynı işaretli ise $\frac{V_2}{V_1} = n$, değilse $\frac{V_2}{V_1} = -n$
- Hem $\overline{I_1}$, hem de $\overline{I_2}$ noktalı taraftan giriyorsa veya çıkıyorsa $I_1/I_2 = -n$, değilse $I_1/I_2 = +n$

13.39 A 1,200/240-V rms transformer has impedance $60\angle{-30^\circ}\ \Omega$ on the high-voltage side. If the transformer is connected to a $0.8\angle{10^\circ}$-Ω load on the low-voltage side, determine the primary and secondary currents when the transformer is connected to 1,200 V rms.

$\bar{I}_1, \bar{I}_2 = ?$

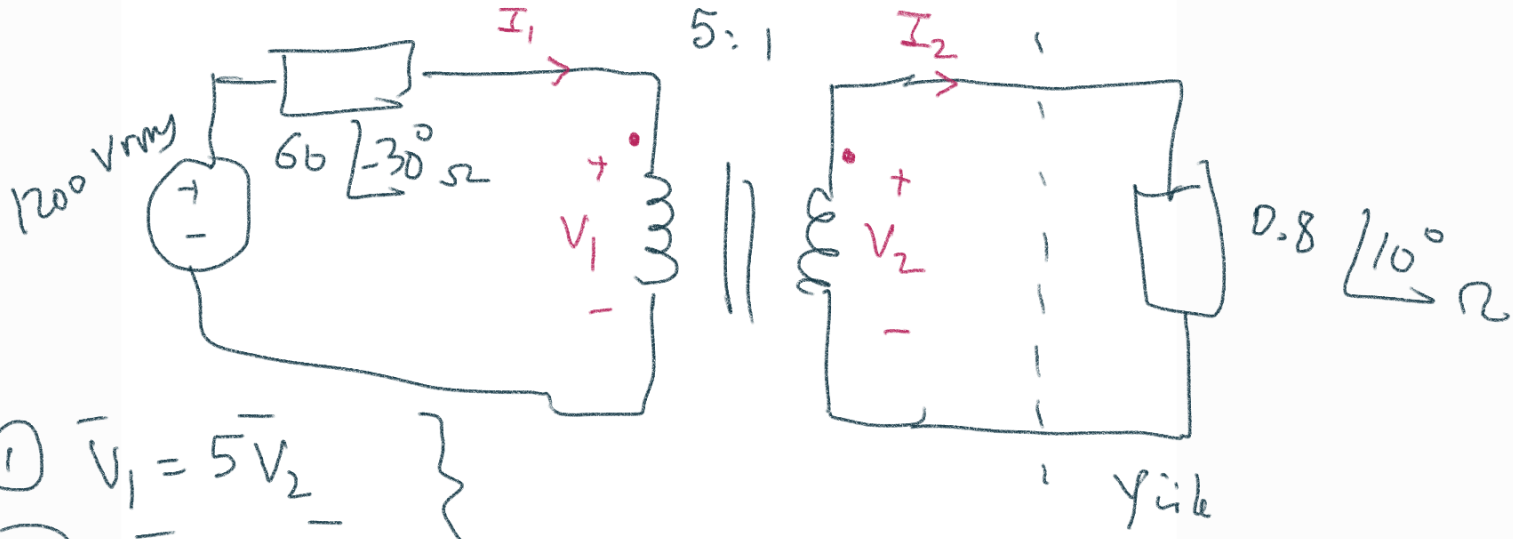

(1) $\bar{V}_1 = 5\bar{V}_2$

(2) $\bar{I}_2 = 5\bar{I}_1$

(3) $1200 = 60\angle{-30}\,\bar{I}_1 + \bar{V}_1$

(4) $\bar{V}_2 = 0.8\angle{10^\circ}\,\bar{I}_2$

(4) $\dfrac{\bar{V}_1}{5} = 4\angle{10^\circ}\,I_1 \Rightarrow \bar{V}_1 = 20\angle{10^\circ}\,\bar{I}_1$

(3) $1200 = 60\angle{-30}\,\bar{I}_1 + 20\angle{10^\circ}\,\bar{I}_1$

$$\bar{I}_1 = \frac{1200}{60\angle{-30^\circ} + 20\angle{10^\circ}}$$

$$= \frac{1200}{52 - j30 + 19.7 + j3.5} = \frac{1200}{71.7 - j26.5}$$

$$= \frac{1200}{76.4\angle{-20.3^\circ}}$$

$\bar{I}_1 = 15.7\angle{20.3^\circ}\ A$

$\bar{I}_2 = 78.53\angle{20.3^\circ}\ A$

(2)

***13.44** In the ideal transformer circuit of Fig. 13.109, find $i_1(t)$ and $i_2(t)$.

$$\boxed{\frac{\bar{I}_1}{\bar{I}_2} = n}$$

$$\boxed{\frac{\bar{V}_2}{\bar{V}_1} = -n}$$

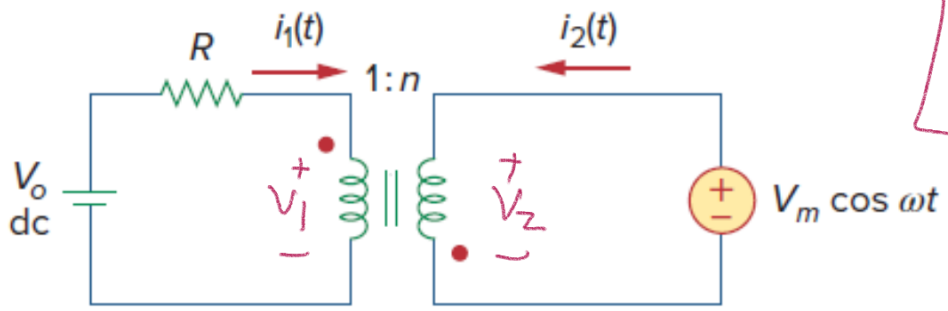

Figure 13.109
For Prob. 13.44.

Superpozisyon uygulanabilir

DC

$\omega = 0$

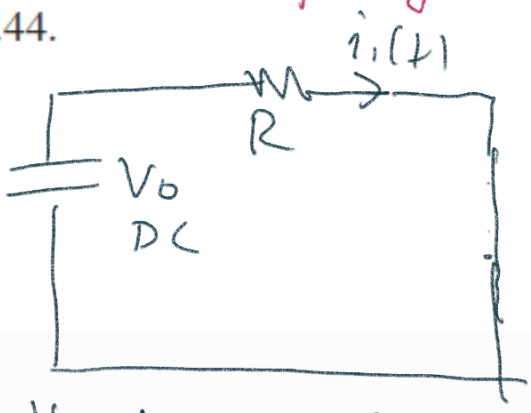

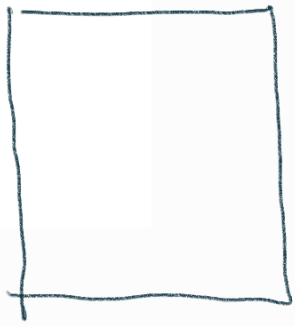

$i_1(t) = \frac{V_o}{R}$ A $\qquad i_2(t) = 0$

AC

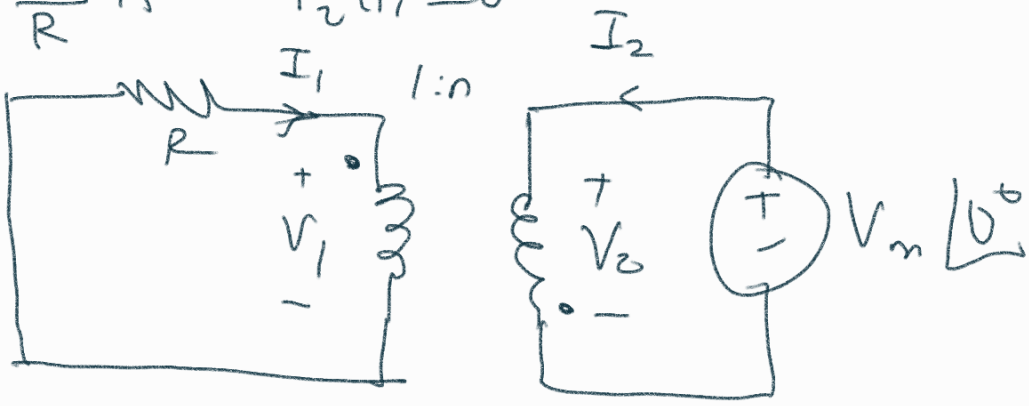

$$\bar{V}_2 = V_m \angle 0^\circ$$

$$\bar{V}_1 = -\frac{V_m \angle 0^\circ}{n}$$

(1) $R I_1 + V_1 = 0 \Rightarrow R I_1 = \frac{V_m \angle 0^\circ}{n}$

$$\bar{I}_1 = \frac{V_m}{nR} \angle 0^\circ \xrightarrow{P^{-1}} \frac{V_m}{nR} \cos(\omega t)$$

$$\bar{I}_2 = \frac{V_m}{n^2 R} \angle 0^\circ \xrightarrow{P^{-1}} \frac{V_m}{n^2 R} \cos(\omega t)$$

TOPLAMDA : $i_1(t) = \frac{V_o}{R} + \frac{V_m}{nR} \cos(\omega t)$

$$i_2(t) = \frac{V_m}{n^2 R}\cos(\omega t)$$

13.50 Calculate the input impedance for the network in Fig. 13.115.

ML

empedans yansıması sarım oranının karesi ile olur ve noktalardan bağımsızdır.

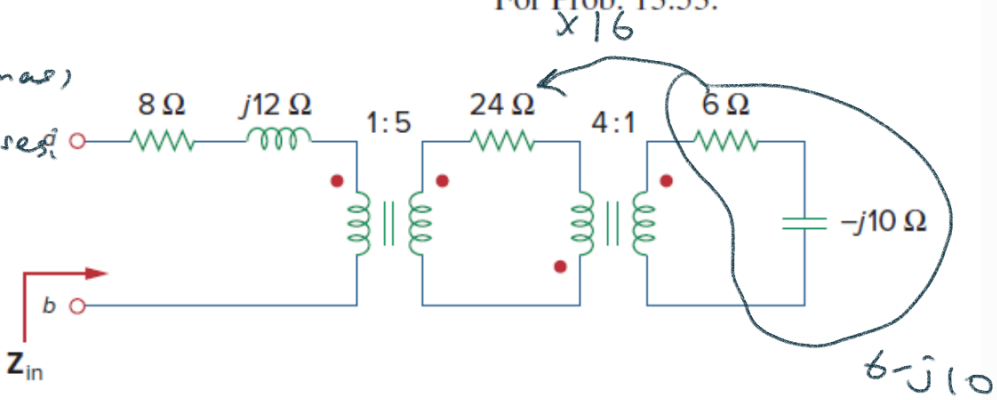

Figure 13.118
For Prob. 13.53.

Figure 13.115
For Prob. 13.50.

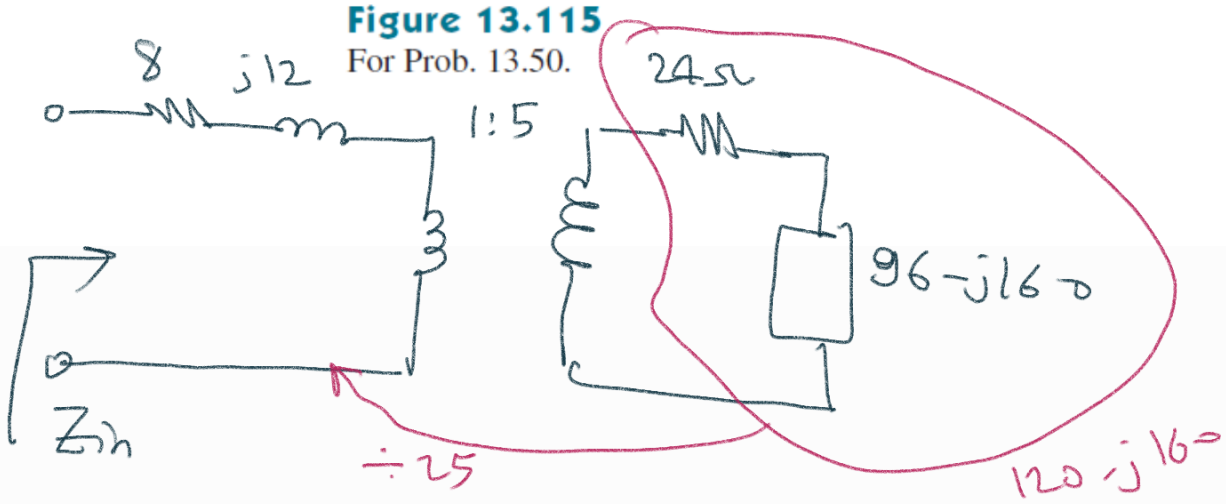

$$Z_{in} = 8 + j12 + \frac{120 - j160}{25}$$

$$= 8 + j12 + 4.8 - j6.4$$

$$Z_{in} = 12.8 + j5.6\ \Omega$$

13.51 Use the concept of reflected impedance to find the input impedance and current $\mathbf{I}_1$ in Fig. 13.116.

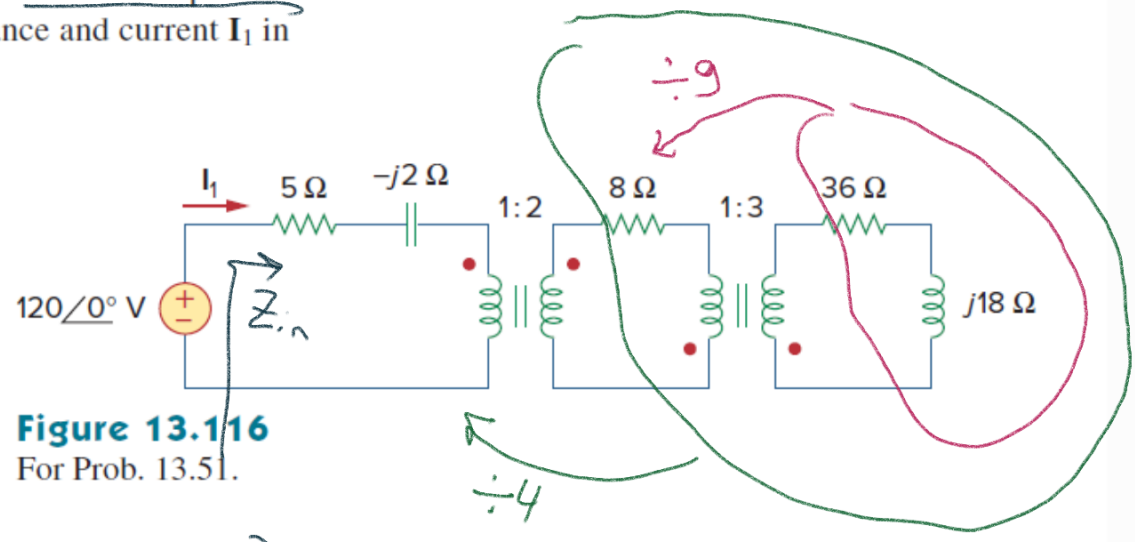

Figure 13.116
For Prob. 13.51.

$$Z_{in} = \left(\frac{36+j18}{9} + 8\right)\frac{1}{4} + 5 - j2$$

$$= \frac{(4+j2+8)}{4} + 5 - j2$$

$$= 3 + j0.5 + 5 - j2 = 8 - j1.5\ \Omega$$

$$I_1 = \frac{120}{Z_{in}} = \frac{120}{8-j1.5} = \frac{120\angle 0^\circ}{8.14\angle -10.6^\circ}$$

$$I_1 = 14.7\angle +10.6^\circ \text{ A}$$

13.58 Determine the average power absorbed by each resistor in the circuit of Fig. 13.123. 3 Sevre var

$$P = \frac{1}{2} \times 20 \times 4.5^2 = 202.5\text{ W}$$

$$P = \frac{1}{2} \times 20 \times 1.6^2 = 25.6\text{ W}$$

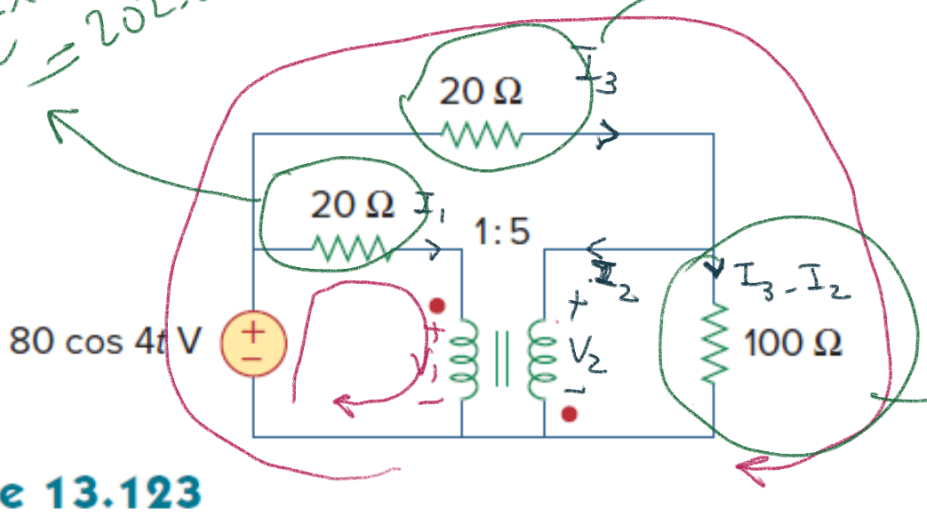

$$P = \frac{1}{2} \times 100 \times 0.475^2 = 11.28\text{ W}$$

Figure 13.123
For Prob. 13.58.

(1) $80 = 20\bar{I}_1 + \bar{V}_1$

(2) $\bar{V}_2 = 100(\bar{I}_3 - \bar{I}_2)$

(3) $80 = 20\bar{I}_3 + 100(\bar{I}_3 - \bar{I}_2)$

(4) $V_2 = -5V_1$

(5) $I_1 = 5I_2$

(3) $80 = 120\bar{I}_3 - 100\bar{I}_2 = 120\bar{I}_3 - 20\bar{I}_1$

(3) $\bar{I}_3 = \dfrac{80 + 100\bar{I}_2}{120}$

(2) $\bar{V}_2 = 100\left(\dfrac{80 + 100\bar{I}_2}{120} - \bar{I}_2\right)$

$= \dfrac{100}{120}\left(80 + 100\bar{I}_2 - 120\bar{I}_2\right)$

$\bar{V}_2 = \dfrac{100}{120}\left(80 - 20I_2\right) = -5V_1$

$$\boxed{V_1 = -\frac{20}{120}\left(80 - 20I_2\right)}$$

$V_1 = -\frac{1}{6}\left(80 - 4I_1\right)$

(1) $80 = 20I_1 - \frac{1}{6}\left(80 - 4I_1\right)$

$80 \times \frac{7}{6} = I_1\left(20 + \frac{4}{6}\right)$

$\frac{560}{6} = \frac{124}{6}I_1 \Longrightarrow I_1 \cong 4.5\angle 0^\circ \text{ A}$

$\bar{I}_2 \simeq 1.125\angle 0^\circ \text{ A}$

$$I_3 = \frac{80 + 100 I_2}{120} = \frac{80 + 112.5}{120} = 1.6 \angle 0^\circ \text{ A}$$

$$I_3 - I_2 = 0.475 \angle 0^\circ \text{ A}$$

$$I_1 + I_3 = 6.1 \angle 0^\circ$$

13.63 Find the mesh currents in the circuit of Fig. 13.128

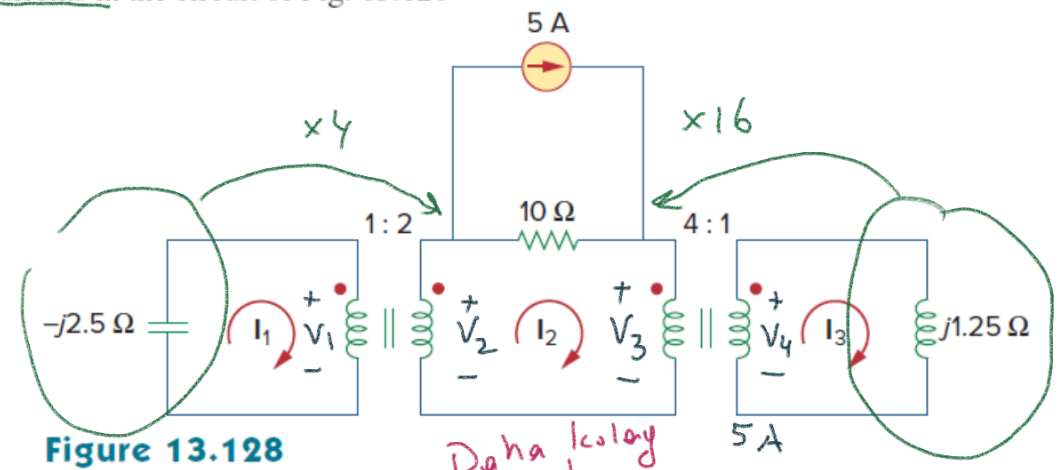

Figure 13.128
For Prob. 13.63.

Daha kolay yol

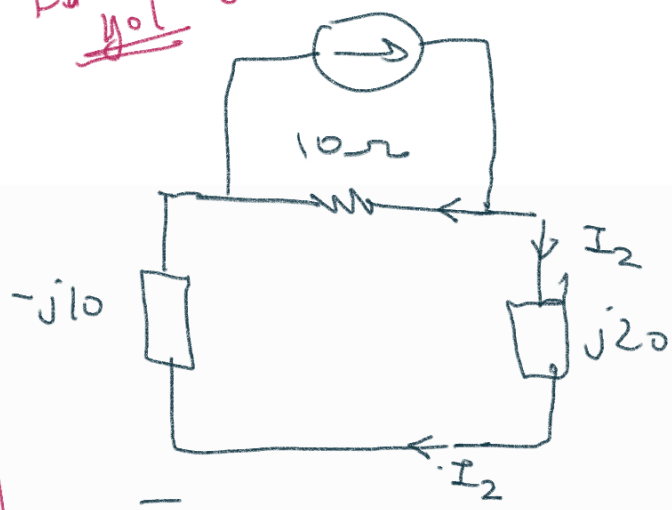

(1) $V_1 = j2.5 I_1$

(2) $-V_2 + 10(I_2 - 5) + V_3 = 0$

(3) $V_4 = j1.25 I_3$

(4) $V_2 = 2V_1$

(5) $I_1 = 2I_2$

(6) $V_3 = 4V_4$

(7) $I_3 = 4I_2$

$$\bar{I}_2 = 5 \times \frac{10}{10 + j10}$$

$$= \frac{50}{10\sqrt{2} \angle 45} = \frac{5}{\sqrt{2}} \angle -45^\circ$$

$$\bar{I}_2 = 2.5 - j2.5 \text{ A}$$

(5)

$$\bar{I}_1 = 5 - j5 \text{ A}$$

$$\bar{I}_3 = 10 - j10 \text{ A}$$

13.68 In the ideal autotransformer of Fig. 13.131, calculate $\mathbf{I}_1$, $\mathbf{I}_2$, and $\mathbf{I}_o$. Find the average power delivered to the load.

ML

ototrafo : Tek sarım üzerinden birincil ve ikincil sarımlar oluşturulur.

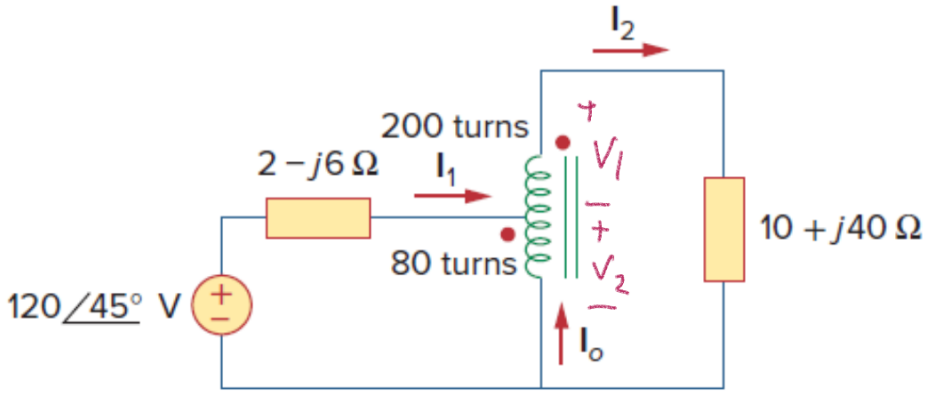

Figure 13.131
For Prob. 13.68.

(1) $120\angle 45^\circ = (2-j6)I_1 + V_2$

(2) $V_1 + V_2 = (10+j40)I_2 \overset{(3)}{\Rightarrow} 3.5V_2 = (10+j40)I_2$

(3) $V_1 = 2.5\,V_2$

(4) $I_o = -2.5\,I_2$

(5) $I_o + I_1 = I_2 \overset{(4)}{\Rightarrow} \boxed{I_1 = 3.5\,I_2}$

(1) $120\angle 45^\circ = (7-j21)\bar{I}_2 + \bar{V}_2$

$120\angle 45^\circ = (7-j21)\bar{I}_2 + \dfrac{10+j40}{3.5}\bar{I}_2$

$120\angle 45^\circ = I_2\left[\dfrac{24.5 - j73.5 + 10 + j40}{3.5}\right]$

$I_2 = \dfrac{420\angle 45^\circ}{34.5 - j33.5} = \dfrac{420\angle 45^\circ}{48\angle 44.2^\circ}$

$= 8.75\angle 0.8^\circ \simeq 8.75\text{ A}$

$I_0 = -2.5\, I_2 \simeq -21.9\ A$

$I_1 = I_2 - I_0 = 30.6\ A$

13.77 The three-phase system of a town distributes power with a line voltage of 13.2 kV. A pole transformer connected to single wire and ground steps down the high-voltage wire to 120 V rms and serves a house as shown in Fig. 13.139.

(a) Calculate the turns ratio of the pole transformer to get 120 V.

(b) Determine how much current a 100-W lamp connected to the 120-V hot line draws from the high-voltage line.

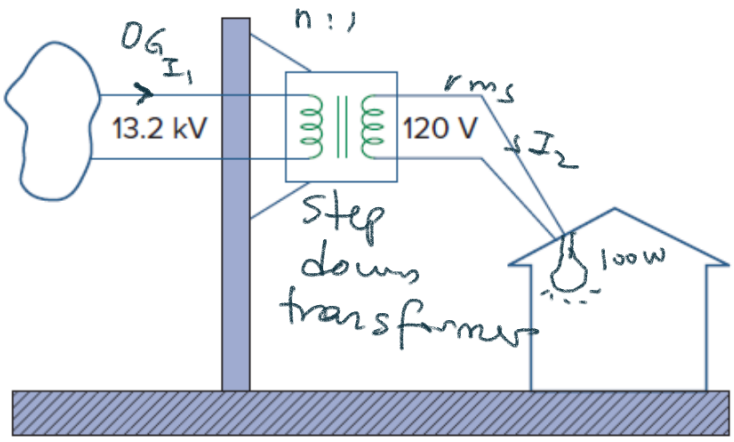

Figure 13.139
For Prob. 13.77.

a) $n = \frac{13200}{120} = 110$

b) $P = 100\,W = 120 \times I$

$\boxed{I_2 = \frac{1}{1.2}\ A}$

$I_1 = \frac{1}{110} \times \frac{1}{1.2}$

$I_1 = \frac{1}{132}\ A$

13.95 Ten bulbs in parallel are supplied by a 7,200/120-V transformer as shown in Fig. 13.147, where the bulbs are modeled by the 144-Ω resistors. Find:

(a) the turns ratio n,
(b) the current through the primary winding.

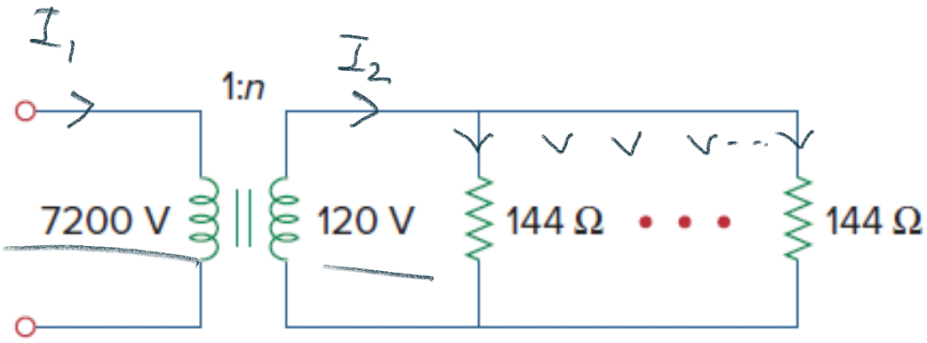

Figure 13.147
For Prob. 13.95.

a) $n = \frac{1}{60}$

b) $I_2 = 10 \times \frac{120}{144} = \frac{10}{1.2}$ A Secondary Current
Sekonder

$I_1 = \frac{I_2}{60} = \frac{10}{720} = \frac{1}{72}$ A primary current
primer

13.91 A 25,000/240-V rms distribution transformer has a primary current rating of 75 A.

(a) Find the transformer kVA rating. → görünen güç.
(b) Calculate the secondary current.

13.92 A 4,800-V rms transmission line feeds a distribution transformer with 1,200 turns on the primary and 28 turns on the secondary. When a 10-Ω load is connected across the secondary, find:

(a) the secondary voltage,
(b) the primary and secondary currents,
(c) the power supplied to the load.

13.91) a) $S = |V I^*| = |V|\,|I| = 25000 \times 75$
$= 1875$ kVA rating

b) $I_2 = 75 \times \frac{25000}{240} = 7812.5$ A

13.92)

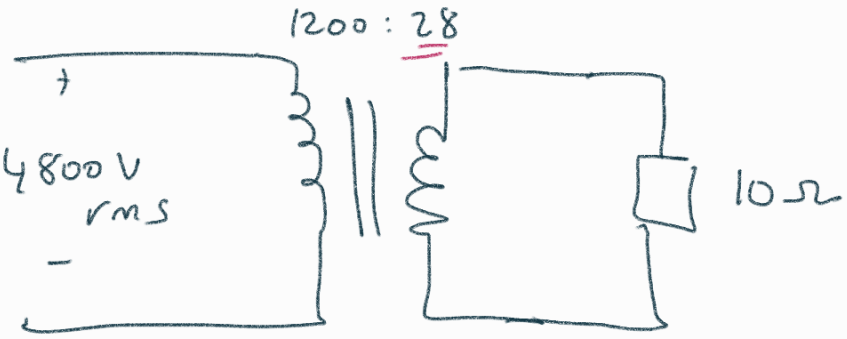

a) $4800 \times \frac{28}{1200} = 132 \text{ V}_{rms}$

b) $I_2 = \frac{132}{10} = 13.2 \text{ A}$

$I_1 = 13.2 \times \frac{28}{1200} = \frac{11 \times 28}{1000} = 0.308 \text{ A}$

c) $P_{10\Omega} = \frac{|V_2|^2}{10} = |I_2|^2 10 = 13.2^2 \times 10$

$= 1.742 \text{ kW}$

9.74 The value of k in the circuit in Fig. P9.74 is adjusted so that Z_{ab} is purely resistive when $\omega = 4$ krad/s. Find Z_{ab}.

$\frac{10^6}{j4 \times 10^3 \times 12.5}$

$\frac{1000}{j50}$

Figure P9.74

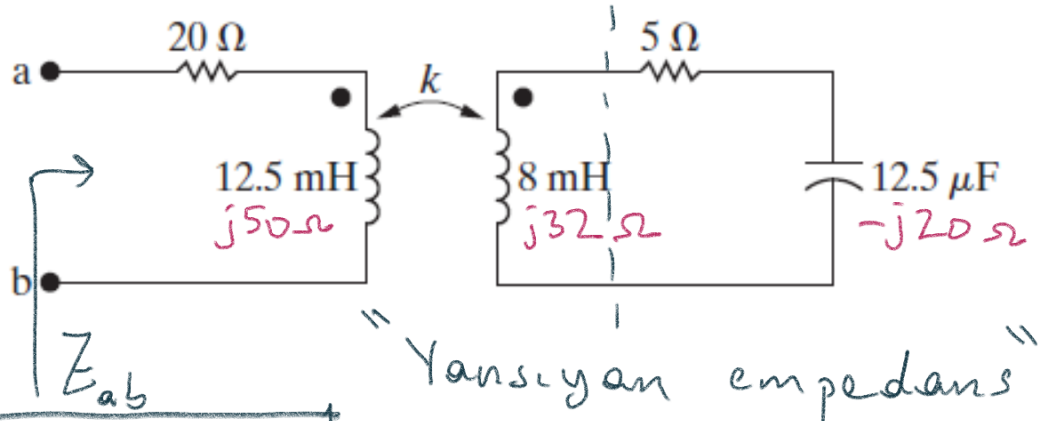

"Yansıyan empedans"

$\boxed{M = k\sqrt{L_1 L_2}}$

manyetik bağlaşım katsayısı $0 \le k \le 1$

$M = k\sqrt{12.5 \times 8}\ 10^{-3} = 0.01k$

$\omega M = 4 \times 10^3 \times 10^{-2} k = 40k$

$$Z_{ab} = 20 + j50 + \frac{(40k)^2}{5+j12} \Rightarrow \in \mathbb{R} \text{ olması istiyor.}$$

$$= 20 + j50 + \frac{(40k)^2}{169}(5-j12)$$

$$\mathrm{Im}\{Z_{ab}\} = 0 \quad = \quad 50 - \frac{(40k)^2}{169} \times 12$$

$$\frac{50 \times 169}{12} = 1600k^2$$

$$k = \sqrt{\frac{50 \times 169}{12 \times 1600}} = 0.66 \quad \text{olmalıdır.}$$

9.77 The sinusoidal voltage source in the circuit seen in Fig. P9.77 is operating at a frequency of 200 krad/s. The coefficient of coupling is adjusted until the peak amplitude of i_1 is maximum.

PSPICE MULTISIM

a) What is the value of k?

b) What is the peak amplitude of i_1 if $v_g = 560\cos(2 \times 10^5 t)$ V?

TRAFO

yük

Figure P9.77

KAPNAK

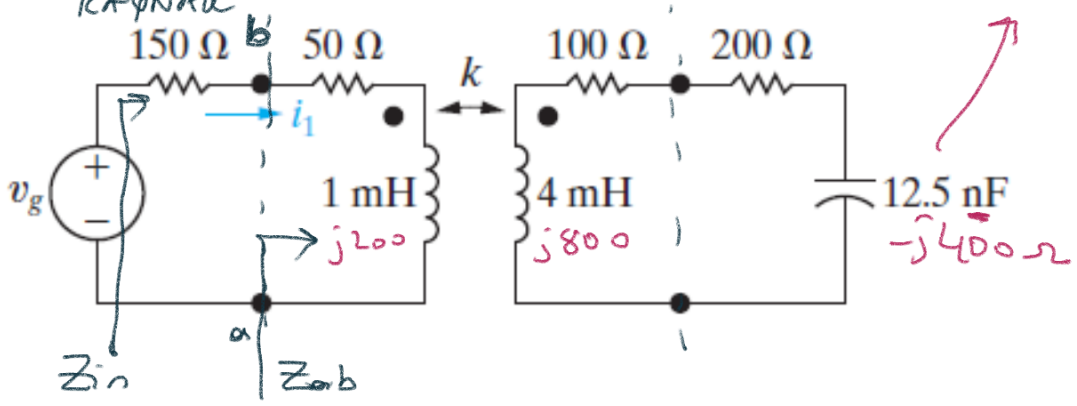

$$\frac{10^9}{j12.5 \times 2 \times 10^5}$$

$$\frac{10^4}{j25} = -j400\Omega$$

$$V_g = I_1(150 + Z_{ab})$$

$$I_1 = \frac{V_g}{150 + Z_{ab}} \qquad \max|I_1| \Rightarrow \max\left\{\frac{|V_g|}{|150 + Z_{ab}|}\right\}$$

$$\Rightarrow \min \left| 150 + Z_{ab} \right| \Rightarrow \min \left| Z_{in} \right|$$

$$\omega M = \omega k \sqrt{L_1 L_2}$$

$$= 2\times10^5 \, k \sqrt{1\times4} \, 10^{-3}$$

$$\omega M = 400k$$

$$Z_{in} = 200 + j200 + \frac{(400k)^2}{300 + j400}$$

$$= 200 + j200 + \frac{1600 \, k^2 \, (3-j4)}{\underbrace{3+j4 \; (3-j4)}_{\to 25}}$$

$$= 200 + j200 + 64k^2 (3-j4)$$

$$Z_{in} = 200 + 192k^2 + j(200 - 256k^2)$$

$$|Z_{in}| = \sqrt{(200+192k^2)^2 + (200-256k^2)^2} \Rightarrow \min$$

$$\underset{k}{\operatorname{argmin}} |Z_{in}| \equiv \underset{k}{\operatorname{argmin}} |Z_{in}|^2$$

$$\underset{k}{\operatorname{argmin}} \left\{ (200+192k^2)^2 + (200-256k^2)^2 \right\}$$

$$\overset{d/dk}{\Rightarrow} \quad \cancel{2}(200+192k^2)384\cancel{k} - \cancel{2}(200-256k^2)512\cancel{k} = 0$$

$$(200+192k^2)384 = (200-256k^2)512$$

$$(192\times384 + 256\times512)\,k^2 = 200\times(512-384)$$

$$204224k^2 = 25600$$

$k = 0.353$ olmalıdır.

bu durumda
$k^2 = 0.125$

$$Z_{in} = 200 + j200 + 64\times0.125\times(3-j4)$$

$= 200 + j200 + 24 - j32$

$Z_{in} = 224 + j168\ \Omega$

$I_{in} = I_1 = \dfrac{560\angle 0^\circ}{224 + j168} = \dfrac{70\angle 0^\circ}{28 + j21} = \dfrac{10\angle 0^\circ}{4 + j3}$

$I_1 = \dfrac{10\angle 0^\circ}{5\angle 37^\circ} = 2\angle -37^\circ$ A

I_1 tepe değeri 2 A olur.

(Not: Soruda $560\cos(\ldots)$ rms deseydi, cevap $2\sqrt{2}$ olurdu)

10.40 The sinusoidal voltage source in the circuit in Fig. P10.40 is developing an rms voltage of 2000 V. The 4 Ω load in the circuit is absorbing four times as much average power as the 25 Ω load. The two loads are matched to the sinusoidal source that has an internal impedance of $500\angle 0^\circ$ kΩ.

a) Specify the numerical values of a_1 and a_2.

b) Calculate the power delivered to the 25 Ω load.

c) Calculate the rms value of the voltage across the 4 Ω resistor.

$\Rightarrow P_{4\Omega} = 4 \times P_{25\Omega}$

$\Downarrow$

$4|I_3|^2 = 4 \times 25 \times |I_2|^2$

$4 I_3^2 = 100 I_2^2$

$I_3^2 = 25 I_2^2$

$\boxed{I_3 = 5 I_2}$

Figure P10.40

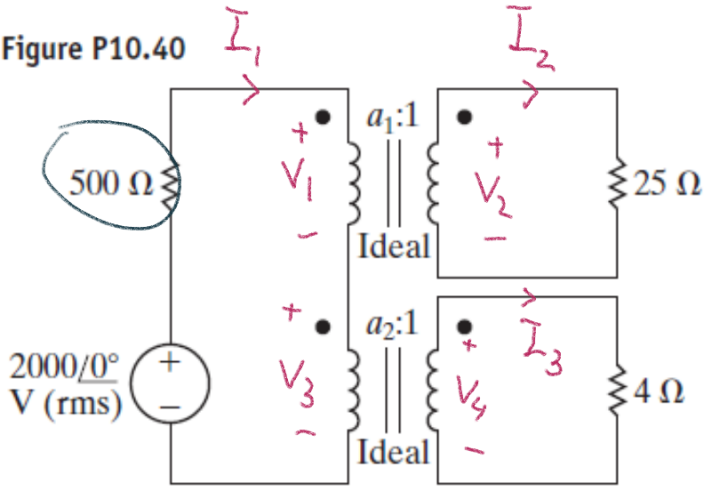

$2000 = 500 I_1 + V_1 + V_3$ (1)

$V_2 = 25 I_2$ (2)

$V_4 = 4 I_3$ (3)

$V_1 = a_1 V_2$ (4)

$25 a_1^2 = 500$

$4 a_2^2 = 500$

$\Downarrow$

$a_1 = \sqrt{20}$

$a_2 = \sqrt{125}$

$V_3 = a_2 V_4$

$I_2 = a_1 I_1$

$I_3 = a_2 I_1$

$I_3 = 5 I_2$

5

6

7

8

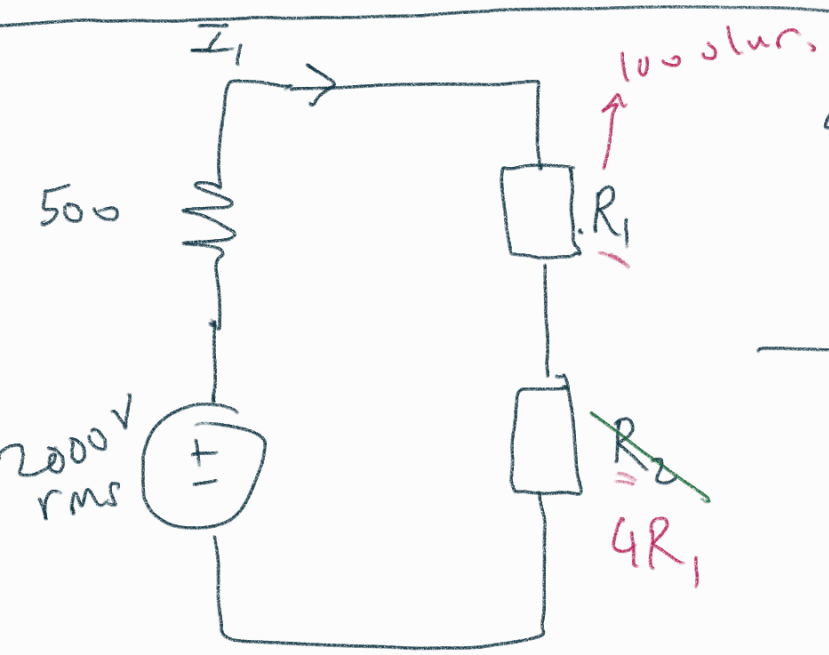

$$4 \cancel{I_1^2} R_1 = \cancel{I_1^2} R_2$$

$$4R_1 = R_2$$

$$I_1 = \frac{2000}{500 + 5R_1}$$

$$I_1 = \frac{400}{100 + R_1}$$

$$\max : \left(\frac{400}{100 + R_1} \right)^2 R_1$$

$$\max \left\{ 160000 \cdot \frac{R_1}{(100 + R_1)^2} \right\}$$

$$\frac{(100 + R_1)^2 - 2(100 + R_1) R_1}{(100 + R_1)^4} = 0 \Rightarrow 100 + R_1 = 2R_1$$

$$\boxed{100 = R_1}$$

$a_1 = 2$

$a_2 = 10$

olmalı

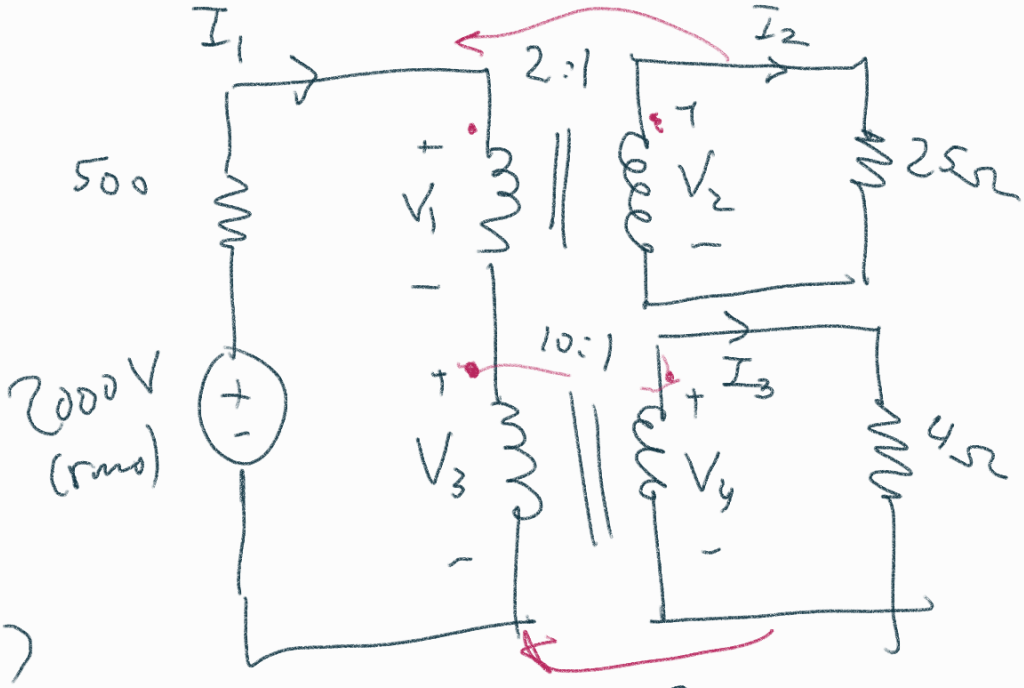

b)

$$I_1 = \frac{2000}{500 + 500} = 2A$$

yansıyan

$$I_2 = 4A \longrightarrow P_{25\Omega} = 16 \times 25 = 400\,W$$

$$I_3 = 20\,A$$

c)

$$V_{4\Omega} = \frac{V_3}{10}$$

$$V_3 = 2A \times 400 = 800\,V_{rms}$$

$$V_{4\Omega} = V_4 = 80\,V_{rms}$$

10.64 a) If N_1 equals 1000 turns, how many turns should be placed on the N_2 winding of the ideal transformer in the circuit seen in Fig. P10.64 so that maximum average power is delivered to the 6800 Ω load?

b) Find the average power delivered to the 6800 Ω resistor.

c) What percentage of the average power delivered by the ideal voltage source is dissipated in the linear transformer?

Figure P10.64

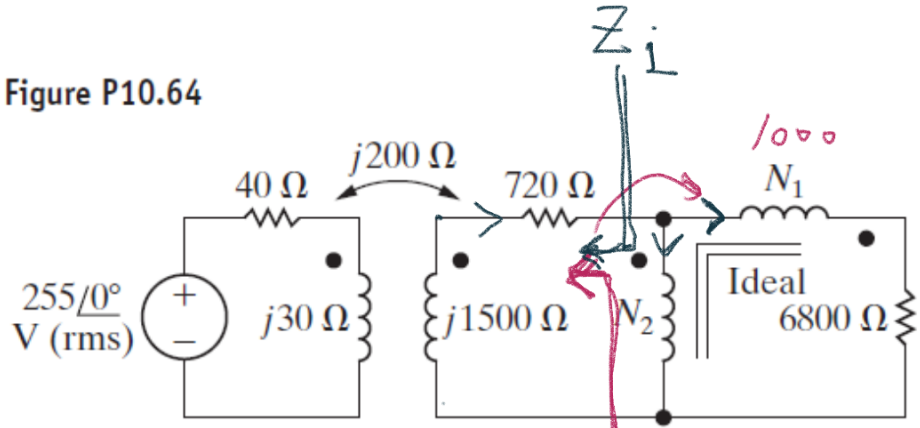

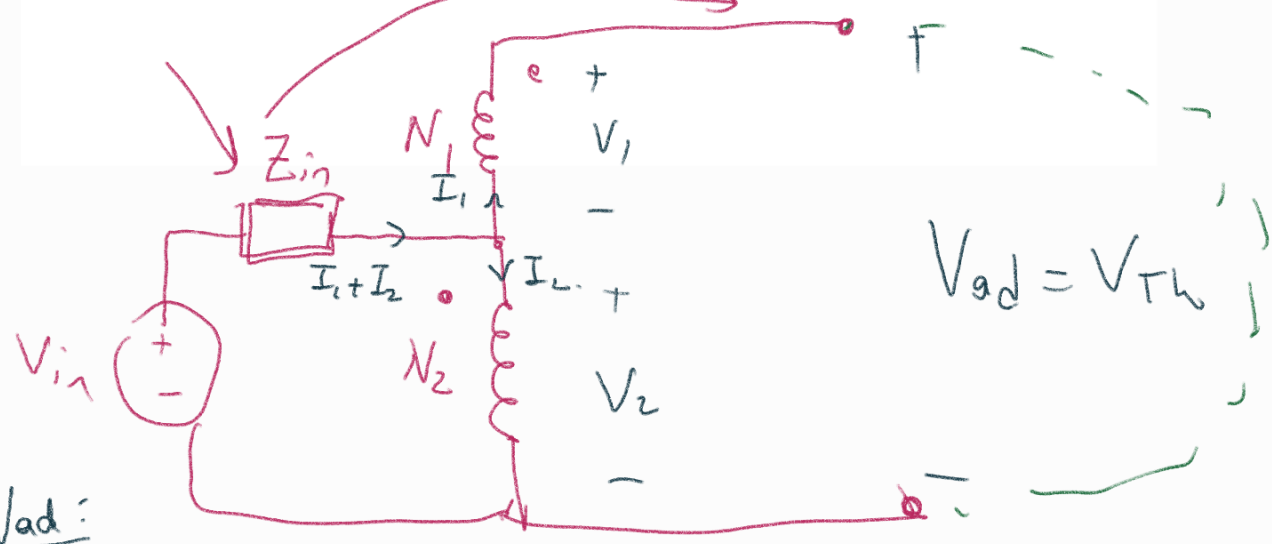

Vad:

$I_1 = 0 \Rightarrow I_2 = 0$

$I_1 + I_2 = 0 \Rightarrow V_2 = V_{in}$

$V_1 = \frac{N_1}{N_2} V_{in}$

$V_{Th} = V_1 + V_2 = V_{in}\left(1 + \frac{N_1}{N_2}\right)$

Ikd

$V_1 + V_2 = 0$

$V_1 = -V_2$

aynı zamanda $\frac{V_2}{V_1} = \frac{N_2}{N_1} \Rightarrow V_1 = V_2 = 0$

o zaman $I_1 + I_2 = \dfrac{V_{in}}{Z_{in}}$

$$\frac{I_1}{I_2} = \frac{N_2}{N_1} \qquad I_2 = I_1 \frac{N_1}{N_2}$$

$$I_1\left(1+\frac{N_1}{N_2}\right) = \frac{V_{in}}{Z_{in}} \Rightarrow I_1 = I_{kd} = \frac{V_{in}}{Z_{in}\left(1+\frac{N_1}{N_2}\right)}$$

$$Z_{Th} = \frac{V_{ad}}{I_{kd}} = \frac{\cancel{V_{in}}\left(1+\frac{N_1}{N_2}\right)}{\cancel{V_{in}} / Z_{in}\left(1+\frac{N_1}{N_2}\right)} = Z_{in}\left(1+\frac{N_1}{N_2}\right)^2$$

$$Z_1 = \frac{200^2}{40+j30} + j1500 + 720$$

$$Z_{Th} = \left(1+\frac{N_1}{N_2}\right)^2 Z_1 \longrightarrow$$ bunun mutlak değeri 6800Ω olmalı.

$$Z_1 = \frac{40000}{50\angle 37^\circ} + j1500 + 720$$

$$= 800\angle -37^\circ + j1500 + 720$$

$$= 640 - j480 + j1500 + 720$$

$$Z_1 = 1360 + j1020$$

$$\left|(1360+j1020)\left(1+\frac{N_1}{N_2}\right)^2\right| = 6800$$

$$\simeq 1700\left(1+\frac{N_1}{N_2}\right)^2 = 6800$$

$$\frac{N_1}{N_2} = \sqrt{\frac{6800}{1700}} - 1 = \sqrt{4} - 1 = 1$$

$$\frac{N_1}{N_2} = 1 \Rightarrow \underline{N_2 = 1000 \text{ olmalıdır}}$$

b) $Z_{Th} = 4(1360 + j1020)$

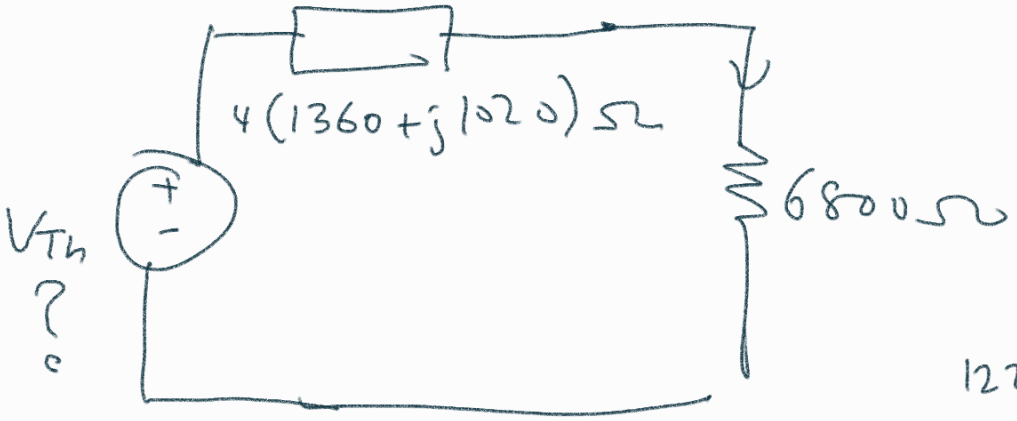

$12240 + j4080$

$\underline{V_{Th} = V_{ad}}$:

$I_1 = I_2 = 0 \Rightarrow I_1 + I_2 = I_{720\Omega} = 0$

$$I_{40\Omega} = \frac{255}{40 + j30} = \frac{255}{50\angle 37^\circ} = 5.1\angle -37^\circ \text{ A}$$

$V_{j1500\Omega} = j\omega M \, I_{40\Omega}$

$= j200 \times I_{40\Omega} = 200\angle 90^\circ \; 5.1\angle -37^\circ$

$V_{j1500\Omega} = 1020\angle 53^\circ \text{ V}$

$V_2 = 1020\angle 53^\circ \text{ V}$

$V_1 = 1020\angle 53^\circ \text{ V} \quad (N_1 = N_2)$

$V_{Th} = V_1 + V_2 = 2040\angle 53^\circ$

$$I_{6800\Omega} = \frac{2040\angle 53^\circ}{12240 + j4080}$$

$$I_{6800} = \frac{204\angle 53^\circ}{1224 + j408} = \frac{1\angle 53^\circ}{6 + j2}$$

$$P_{6800\Omega} = |I_{6800}|^2 \, 6800$$

$$= \frac{1}{40} \times 6800 = \underline{\underline{170 \text{ W}}}$$

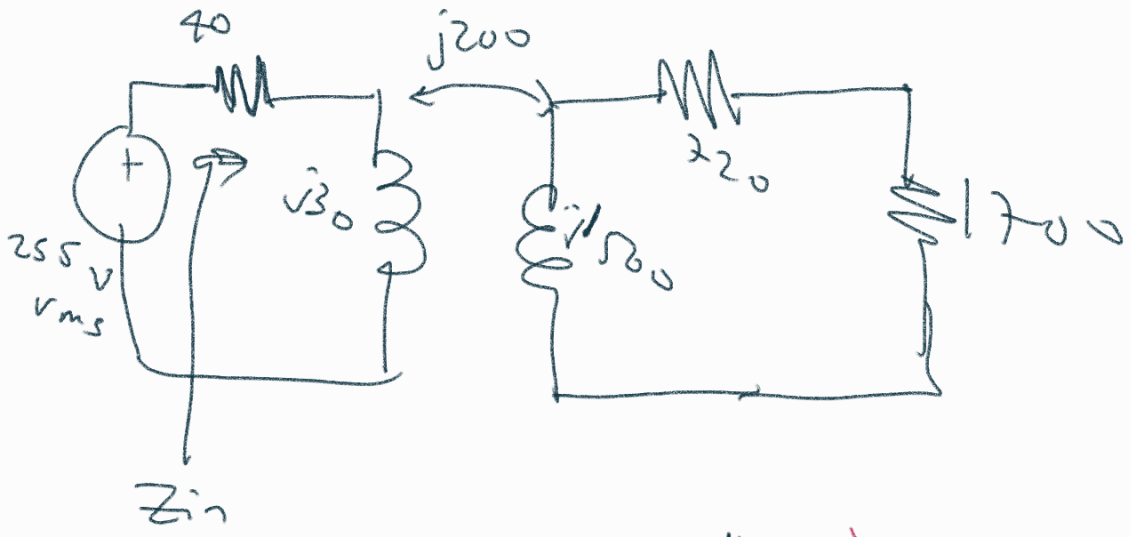

$$Z_{in} = 40 + j30 + \frac{4000\cancel{0}}{2420 + j1500\cancel{0}}$$

$$= 40 + j30 + \frac{2000}{(121 + j75)} \frac{(121 - j75)}{(121 - j75)}$$

$$\boxed{I_{in} = \frac{255}{Z_{in}}}$$

$$Z_{in} = 40 + j30 + \frac{\cancel{2000}\,(121 - j75)}{\cancel{2026}\;10}$$

$$Z_{in} = 52.1 - j22.5$$

$$I_{in} = \frac{255}{52.1 - j22.5}$$

$$S_{in} = 255 \times I_{in}^* =$$

$$= \frac{255^2}{52.1 + j22.5} \Rightarrow P_{in} = \mathrm{Re}\{S_{in}\}$$

$$= \frac{255^2}{3220}(52.1 - j22.5)$$

$P_{in} = 1052$ Watt ⇒ kaynakta üretilen ortalama güç.

yüke aktarılan oran $\frac{170}{1052}$

CHAPTER 14: FREKANS TEPKİSİ

$$\frac{V_o}{V_i} = H \qquad \frac{V_o(j\omega)}{V_i(j\omega)} = H(j\omega) \Rightarrow \text{Transfer fonksiyonu}$$

14.5 For the circuit shown in Fig. 14.72, find $\mathbf{H}(s) = \mathbf{V}_o/\mathbf{I}_s$.

$\boxed{s = j\omega}$

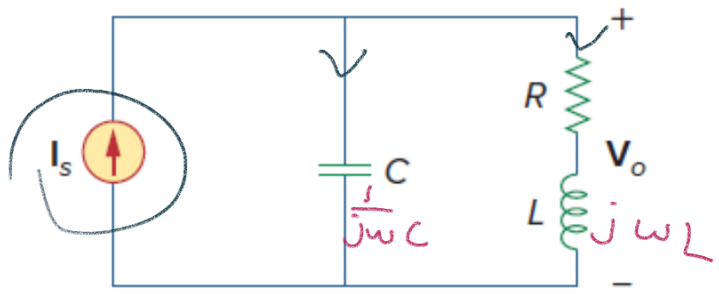

Figure 14.72
For Prob. 14.5.

$$\bar{V}_o = \frac{\bar{I}_s \frac{1}{j\omega C}}{\frac{1}{j\omega C} + R + j\omega L} \times (R + j\omega L)$$

$$H(j\omega) = \frac{\bar{V}_o}{\bar{I}_s} = \frac{R + j\omega L}{j\omega C\left(\frac{1}{j\omega C} + R + j\omega L\right)}$$

$$= \frac{R + j\omega L}{1 + j\omega RC - \omega^2 LC}$$

$$\boxed{H(j\omega) = \frac{R + j\omega L}{1 - \omega^2 LC + j\omega RC}}$$

$$|H(j\omega)| = \frac{\sqrt{R^2+\omega^2L^2}}{\sqrt{(1-\omega^2LC)^2+\omega^2R^2C^2}}$$

$\omega \to 0$: $|H(j\omega)| = R$

$\omega \to \infty$: $|H(j\omega)| \to 0$

$$\theta(j\omega) = \angle H(j\omega) = \tan^{-1}\left(\frac{\omega L}{R}\right) - \tan^{-1}\left(\frac{\omega RC}{1-\omega^2LC}\right)$$

$\omega \to 0$: $\theta(j\omega) = 0$

$\omega \to \infty$: $\theta(j\omega) \to 90^\circ$

Section 14.3 The Decibel Scale

14.7 Calculate $\underbrace{|H(\omega)|}$ if H_{dB} equals → büyüklük

(a) 0.1 dB (b) −5 dB (c) 215 dB

$$X_{dB} = 20\log_{10}(X) \Rightarrow X = 10^{(X_{dB}/20)}$$

→ büyüklük

$$Y_{dB} = 10\log_{10}(Y)$$

→ güç.

a) $0.1\,dB \longrightarrow 10^{0.1/20} \cong 1.012$

$0\,dB \longrightarrow 1$

b) $-5\,dB \longrightarrow 10^{-5/20} = 0.56$

c) $215\,dB \longrightarrow 10^{\frac{215}{20}} = 10^{10.75}$: 10 milyon katten fazla.

2	→ 6 dB	16	→ 24 dB	32	→ 30 dB
4	→ 12 dB	20	→ 26 dB		
8	→ 18 dB	40	→ 32 dB		
10	→ 20 dB	100	→ 40 dB		

14.14 Draw the Bode plots for

$$\boxed{\mathbf{H}(\omega) = \frac{250(j\omega + 1)}{j\omega(-\omega^2 + 10\,j\omega + 25)}}$$

$j\omega \to s \qquad H(s) = \dfrac{250(s+1)}{s(s^2+10s+25)} = \dfrac{250(s+1)}{s(s+5)^2}$

Bode Diyagramı $\to |H(j\omega)|_{dB}$ "büyüklük"

$\to \theta(j\omega)$, derece "açı"

yatay eksen $\omega \to$ Logaritmik 1, 10, 100, 1000

dikey " $|H|_{dB} \to dB$

Asimptotik Bode diyagramı $|j\omega| = \omega$

$|1+j\omega| =$ 

1) Kazanç K 

2) Basit bir kutup veya sıfır. $\left(1+\dfrac{j\omega}{z}\right)$, $\dfrac{1}{1+\dfrac{j\omega}{p}}$ zero, pole

3) Orijinde " " " " $j\omega$, $\dfrac{1}{j\omega}$

4) Kuadratik " " "

$1 + j2\rho_1\dfrac{\omega}{z} + \left(\dfrac{j\omega}{z}\right)^2$, $\dfrac{1}{1 + j2\rho_2\dfrac{\omega}{p} + \left(\dfrac{j\omega}{p}\right)^2}$

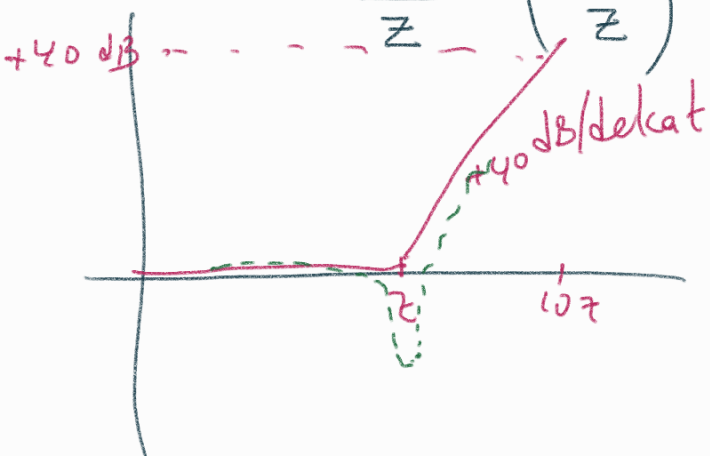

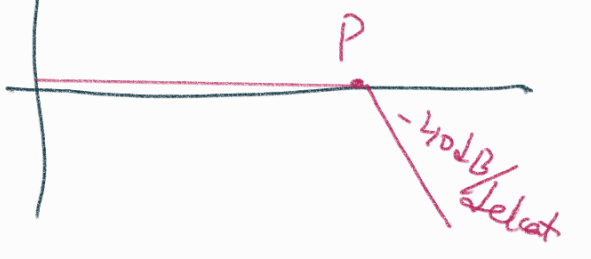

$$H(s) = \frac{250(s+1)}{s(s+5)^2} \Rightarrow H(j\omega) = \frac{250(1+j\omega)}{(j\omega)(j\omega+5)^2}$$

$$= \frac{\cancel{250}(1+j\omega)\,10}{(j\omega)\left(1+\frac{j\omega}{5}\right)^2 \cancel{25}}$$

Kazanç, basit sıfır, orijinde kutup, basit kutup tekrar eden.

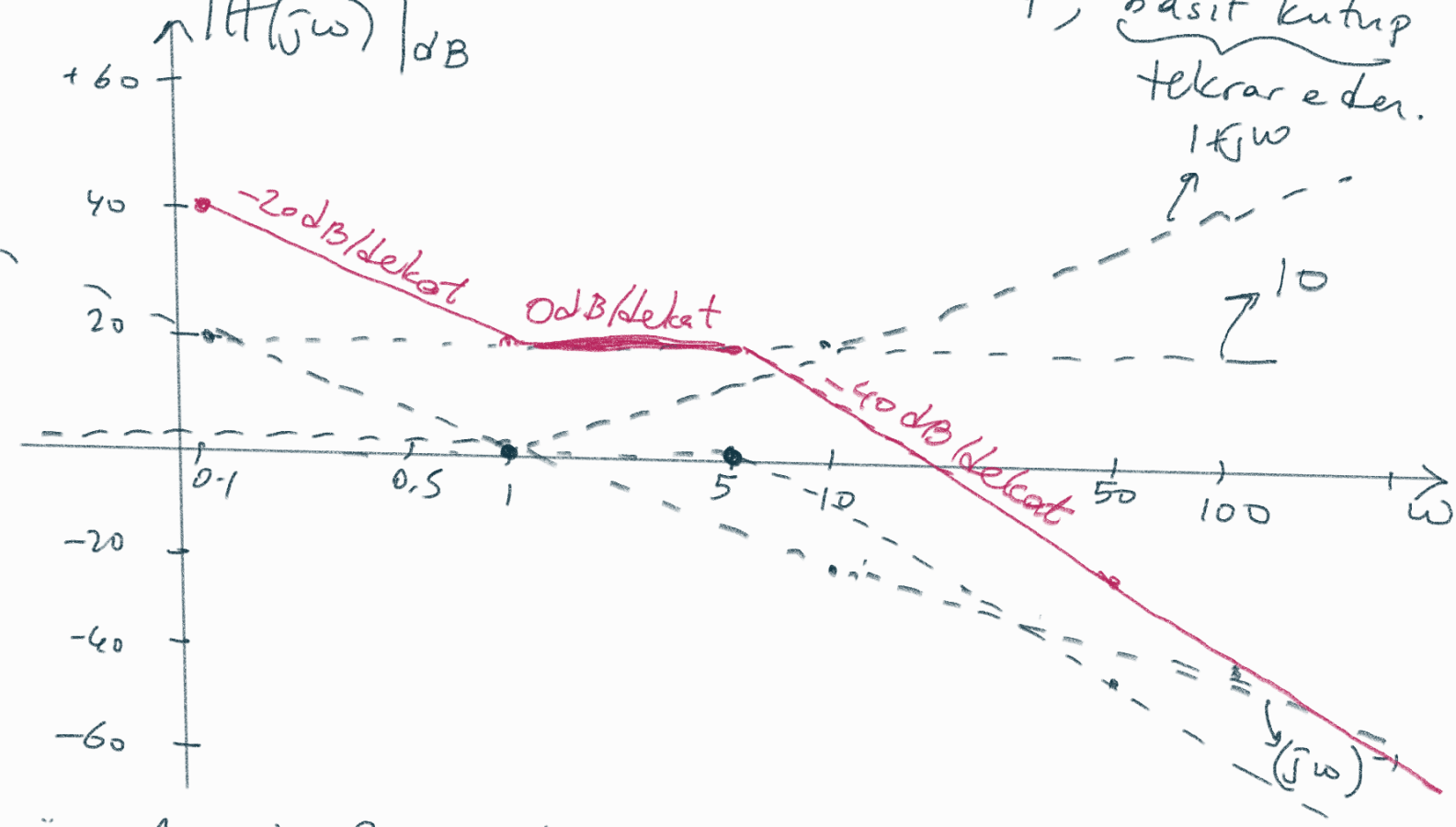

Önemli noktalar: $\omega = 0.1, 0.5, 1, 5, 10, 50$

$$\frac{1}{\left(1+\frac{j\omega}{5}\right)^2}$$

$\theta(j\omega)$?

1) Kazanç K : $\theta_K = 0^\circ$

2) Orijinde sıfır $j\omega \rightarrow \theta = 90^\circ$, $\frac{1}{j\omega} = -90^\circ$ kutup

3) Basit sıfır : $1 + \frac{j\omega}{z}$

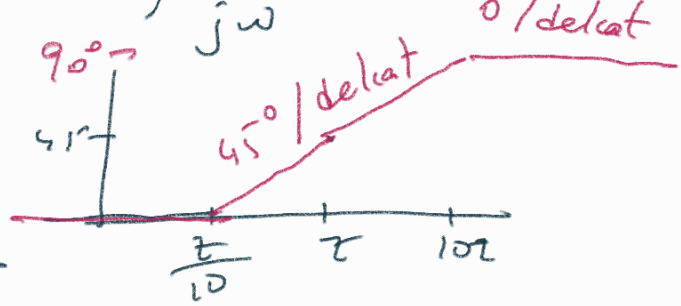

Basit kutup $\frac{1}{1+\frac{j\omega}{p}}$

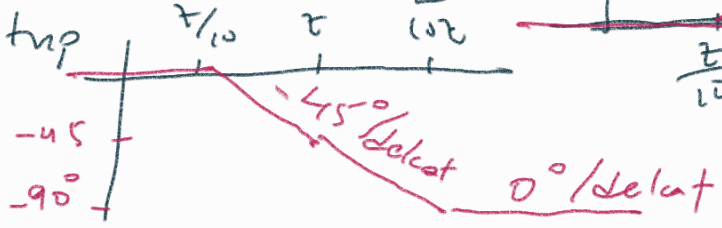

4) Kuadratik sıfır. $1 + j2\zeta_1 \frac{\omega}{z} + \left(\frac{j\omega}{z}\right)^2$

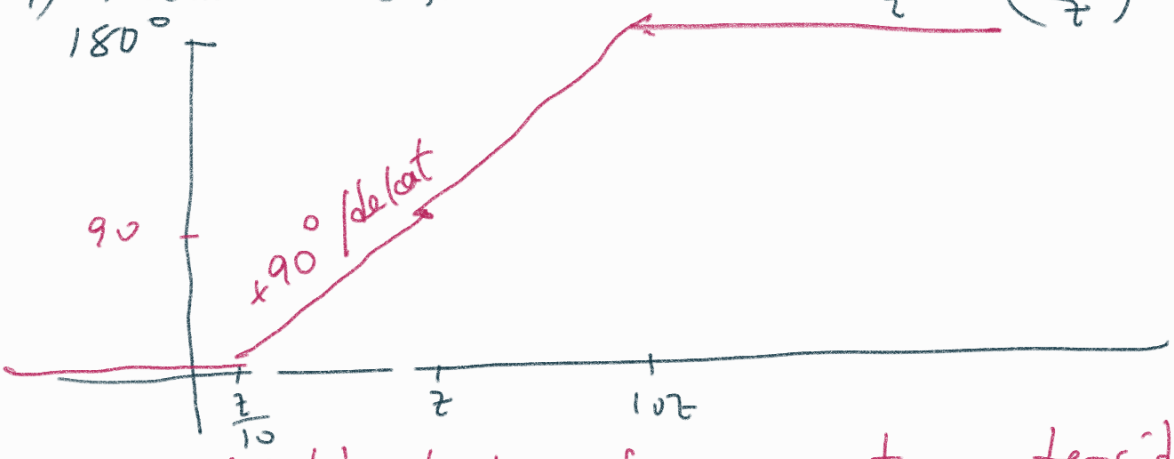

Kuadratik kutup bunun tam tersidir

$$H(j\omega) = \frac{10(1+j\omega)}{j\omega\left(1+\frac{j\omega}{5}\right)^2}$$

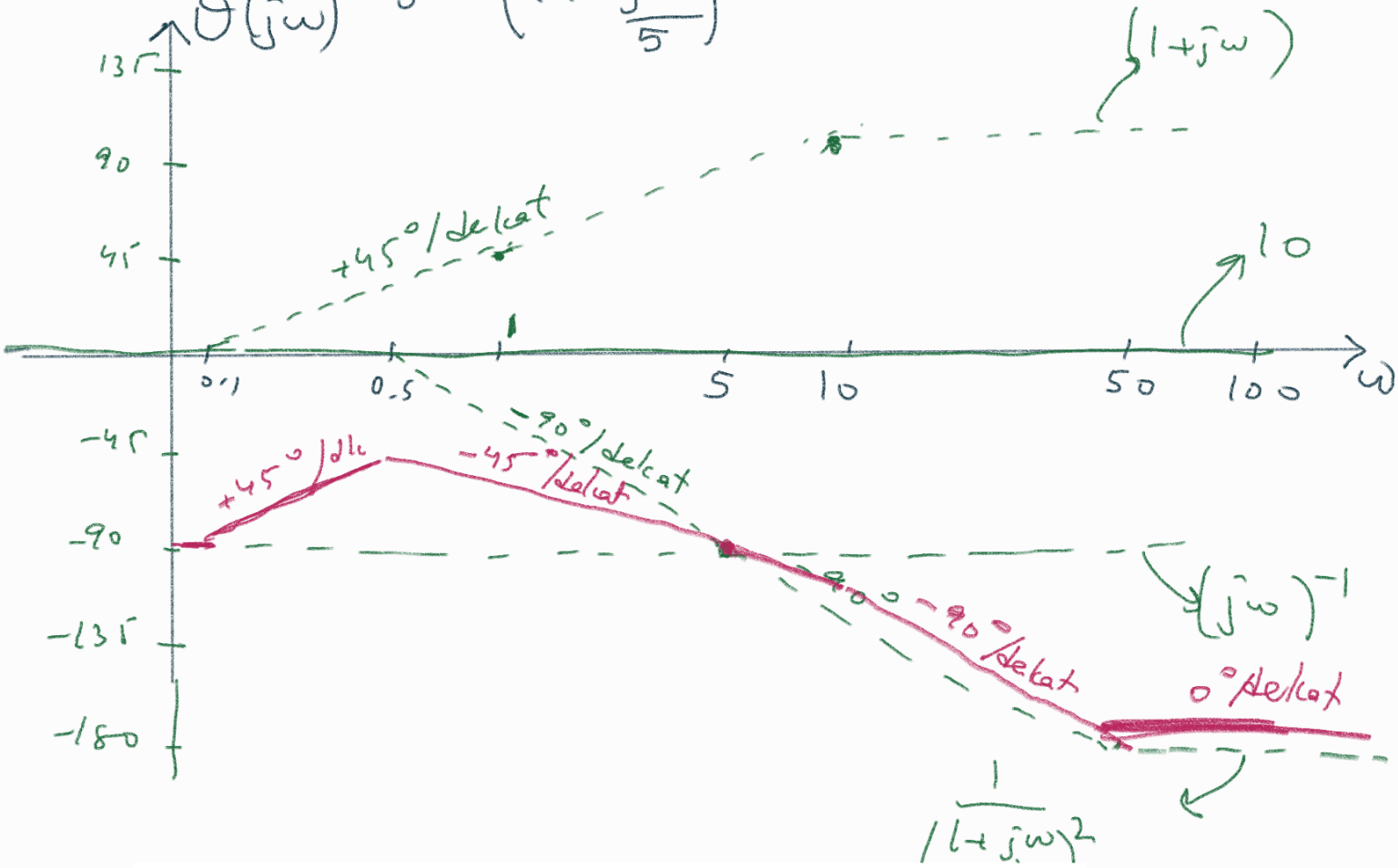

14.19 Sketch the asymptotic Bode plots of the magnitude and phase for

$$H(s) = \frac{80s}{(s+10)(s+20)(s+40)}, \qquad s = j\omega$$

$$H(j\omega) = \frac{80(j\omega)}{(j\omega+10)(j\omega+20)(j\omega+40)}$$

$$H(j\omega) = \frac{\cancel{80}(j\omega)}{100\,\cancel{10}\left(1+\frac{j\omega}{10}\right)\cancel{20}\left(1+\frac{j\omega}{20}\right)\cdot\cancel{40}\left(1+\frac{j\omega}{40}\right)}$$

$|H(j\omega)|$ Bode diyagramını kendiniz yapalım.

uzaktan takip edenler → asimptotik

tgirici@gmail.com (11:05)

Önemli noktalar: 0.1, 1, 2, 4 10, 20, 40, 100, 200, 400

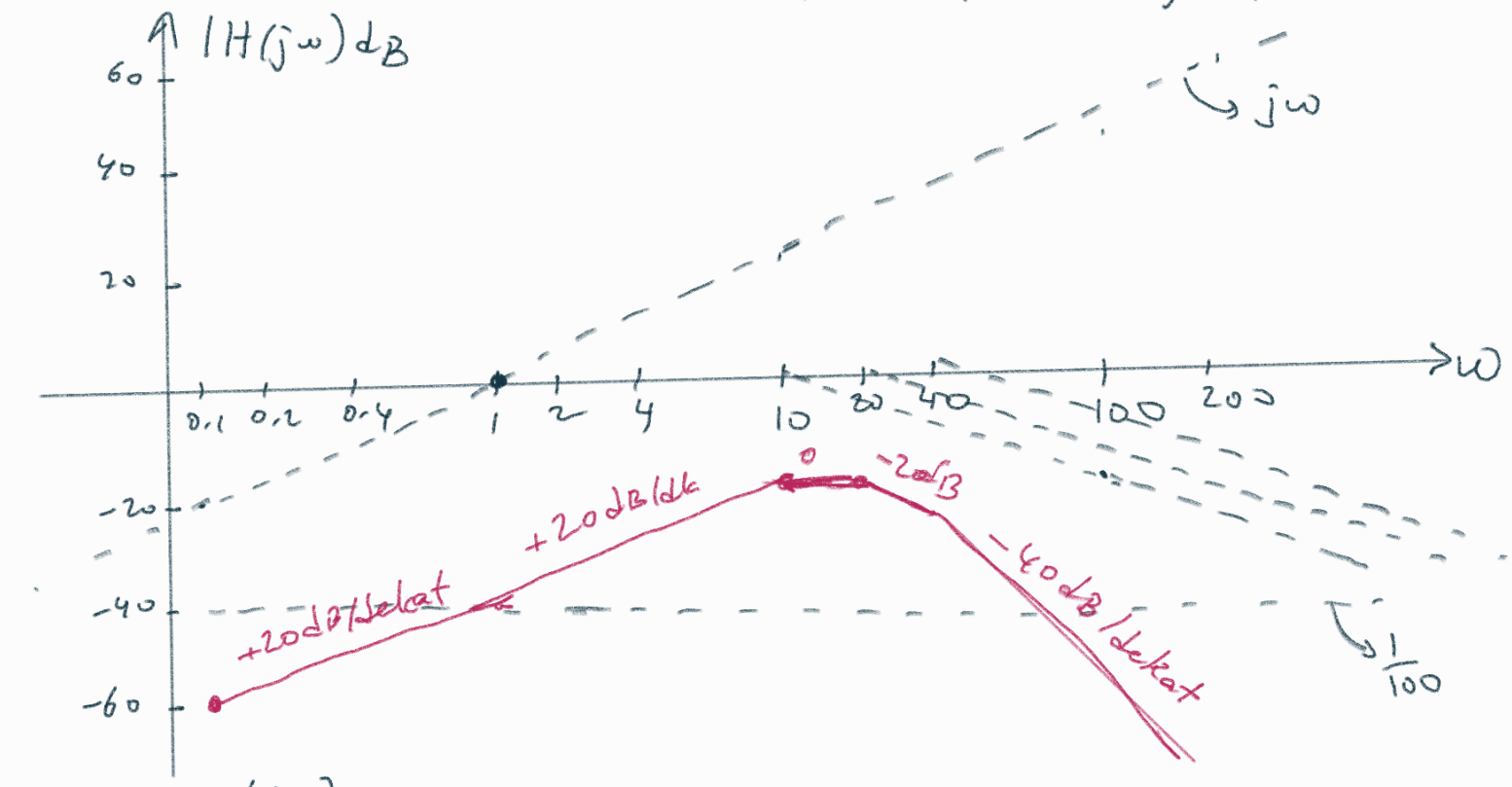

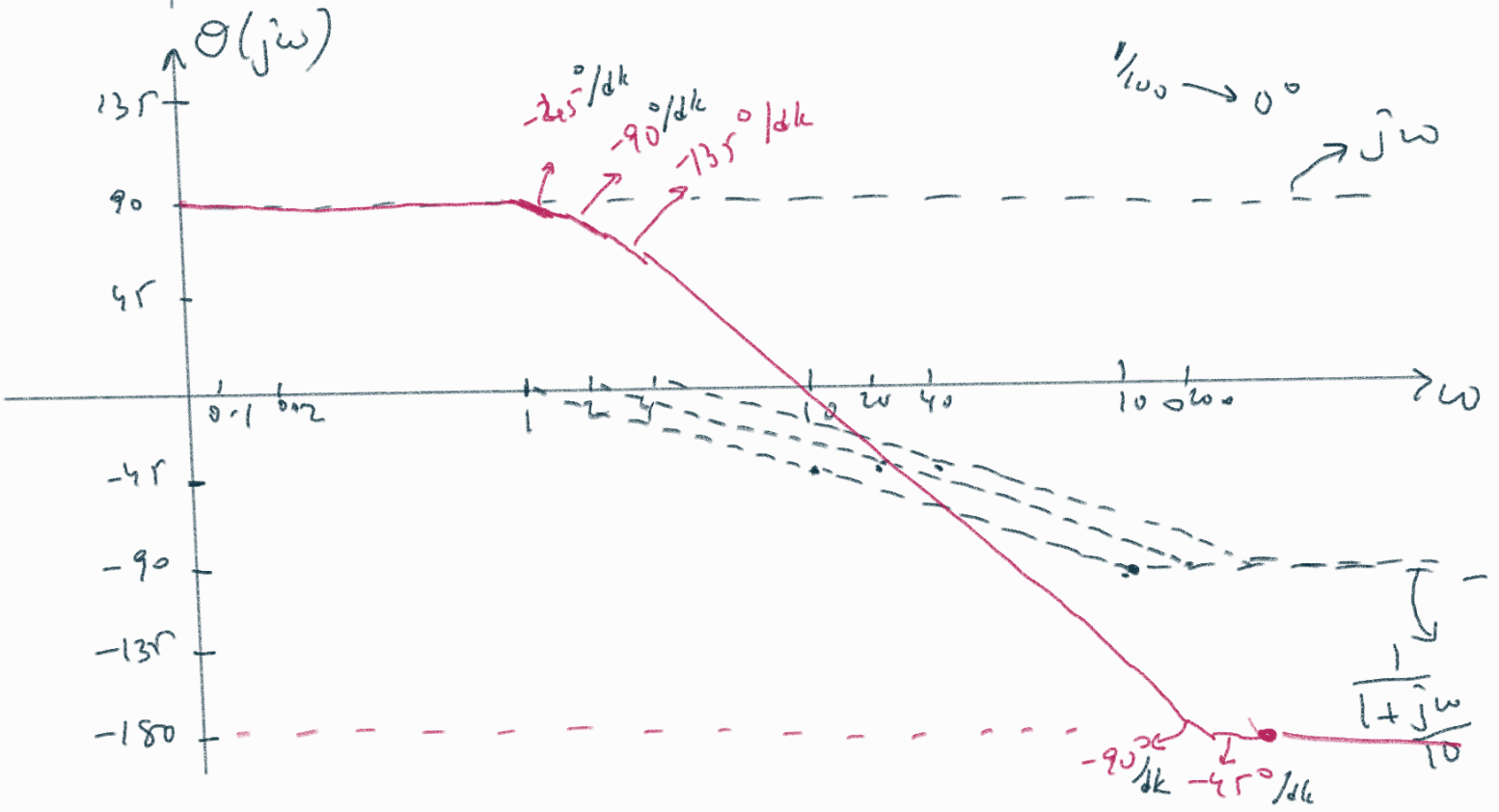

14.16 Sketch Bode magnitude and phase plots for

$$H(s) = \frac{1.6}{s(s^2 + s + 16)}, \quad s = j\omega$$

daha fazla çarpanlara (gerçel) ayıramıyorum

kuadratik kutup oldu.

$$H(j\omega) = \frac{1.6}{(j\omega)\left((j\omega)^2 + j\omega + 16\right)}$$

$$= \frac{\cancel{1.6}}{\cancel{16}\,10\,(j\omega)\left(\left(\frac{j\omega}{4}\right)^2 + \frac{j\omega}{16} + 1\right)}$$

$$\frac{j\omega}{16} = \frac{2j^{1/8}\omega}{4}$$

$\rho = 1/8$ küçük

Önemli noktalar: 0.1, 4, 1, 4, 10, 40

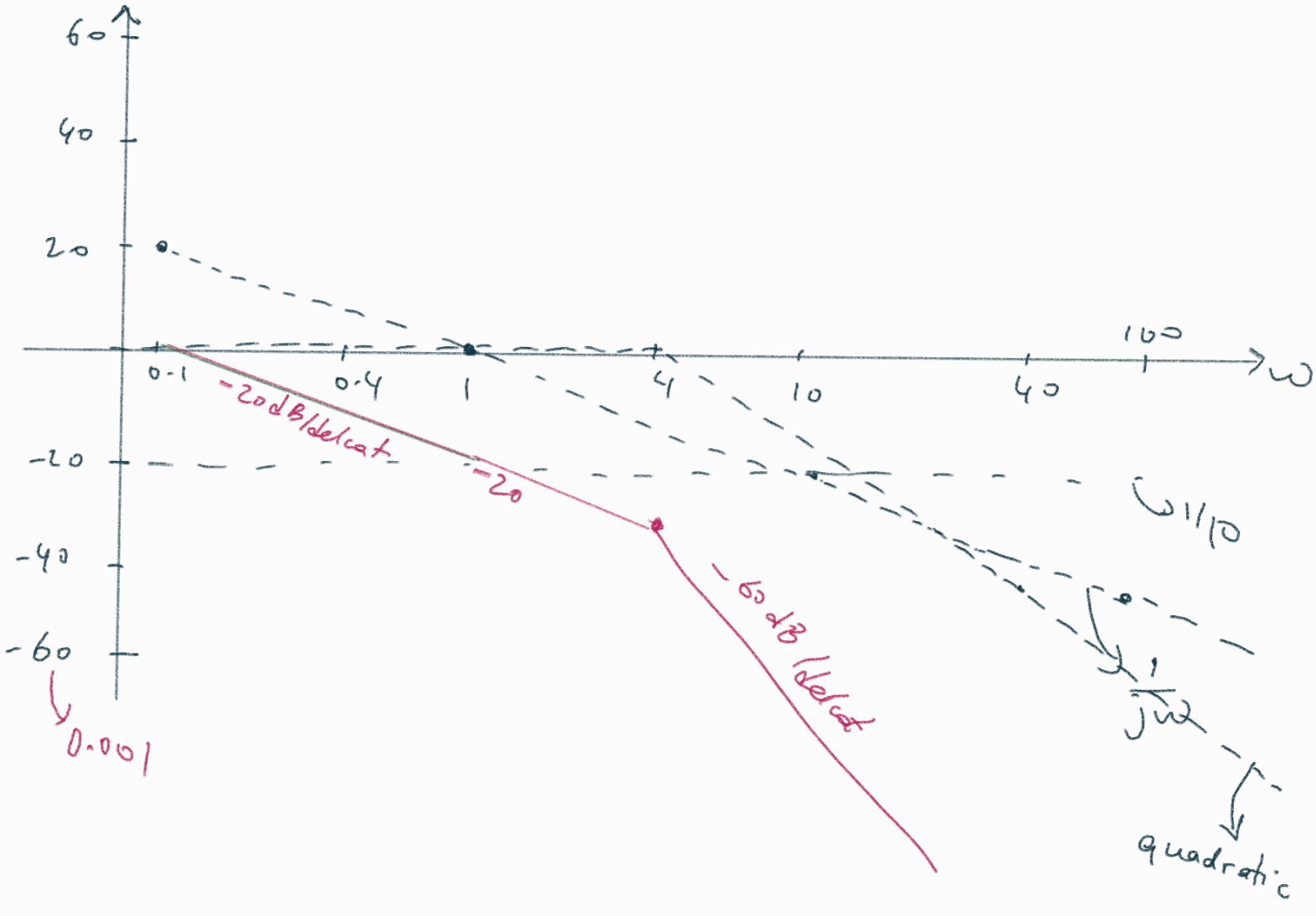

14.21 ~~Sketch the magnitude Bode plot for~~

$$H(s) = \frac{10s(s+20)}{(s+1)(s^2+60s+400)}, \qquad s = j\omega$$

$$\frac{-60 \mp \sqrt{3600-1600}}{2}$$

$$\frac{-60 \mp \sqrt{2000}}{2} = -30 \mp 5\sqrt{20}$$

$$= -30 \mp 10\sqrt{5}$$

$$H(s) = \frac{10s(s+20)}{(s+1)(s+\underbrace{30-10\sqrt{5}}_{7.6})(s+\underbrace{30+10\sqrt{5}}_{52.4})}$$

$$H(j\omega) = \frac{10(j\omega)(j\omega+20)}{(1+j\omega)(j\omega+7.6)(j\omega+52.4)}$$

$$= \frac{200(j\omega)\left(1+\frac{j\omega}{20}\right)}{(1+j\omega)\,7.6\left(1+\frac{j\omega}{7.6}\right)52.4\left(1+\frac{j\omega}{52.4}\right)}$$

$$= \frac{j\omega\left(1+\frac{j\omega}{20}\right)}{2(1+j\omega)\left(1+\frac{j\omega}{7.6}\right)\left(1+\frac{j\omega}{52.4}\right)}$$

0.1 0.76 1, 2, 5.24, 7.6, 10, 20, 52.4, 76, 200

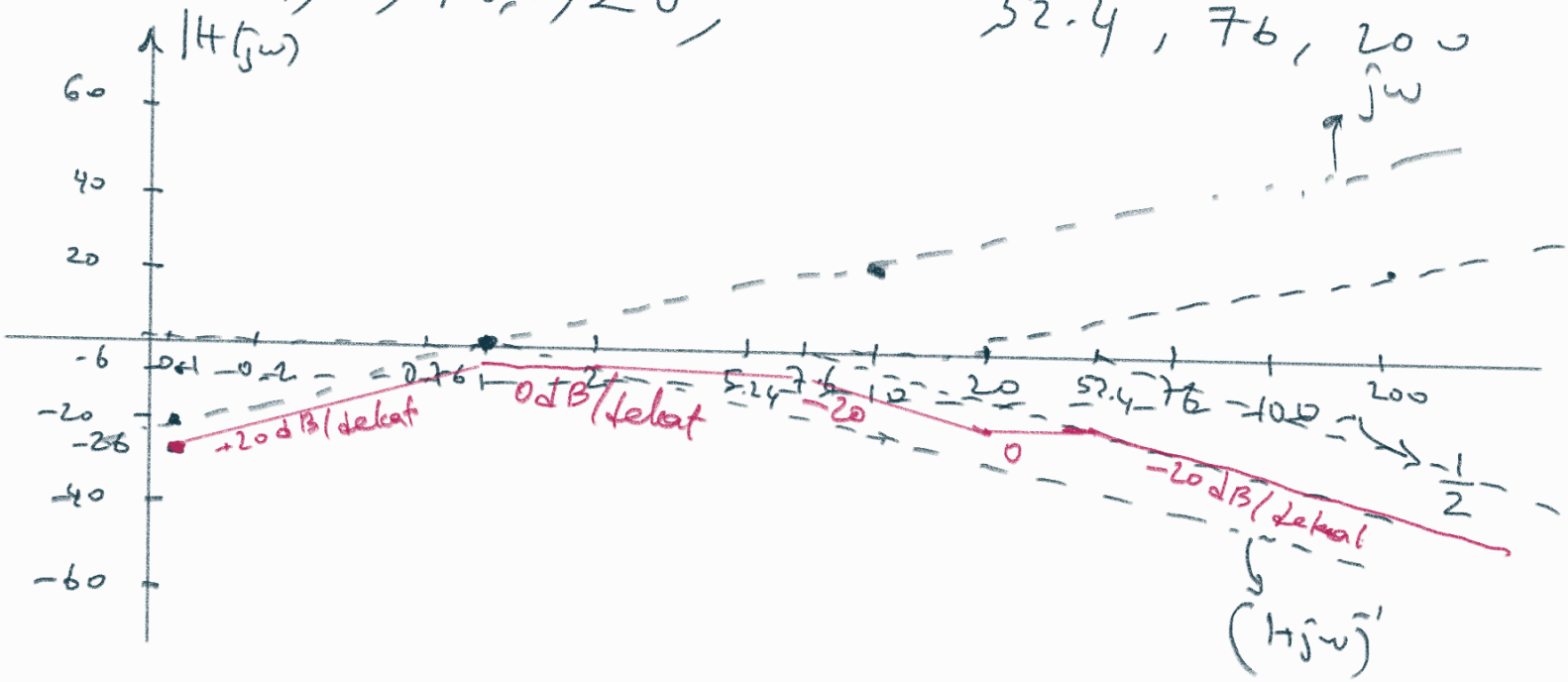

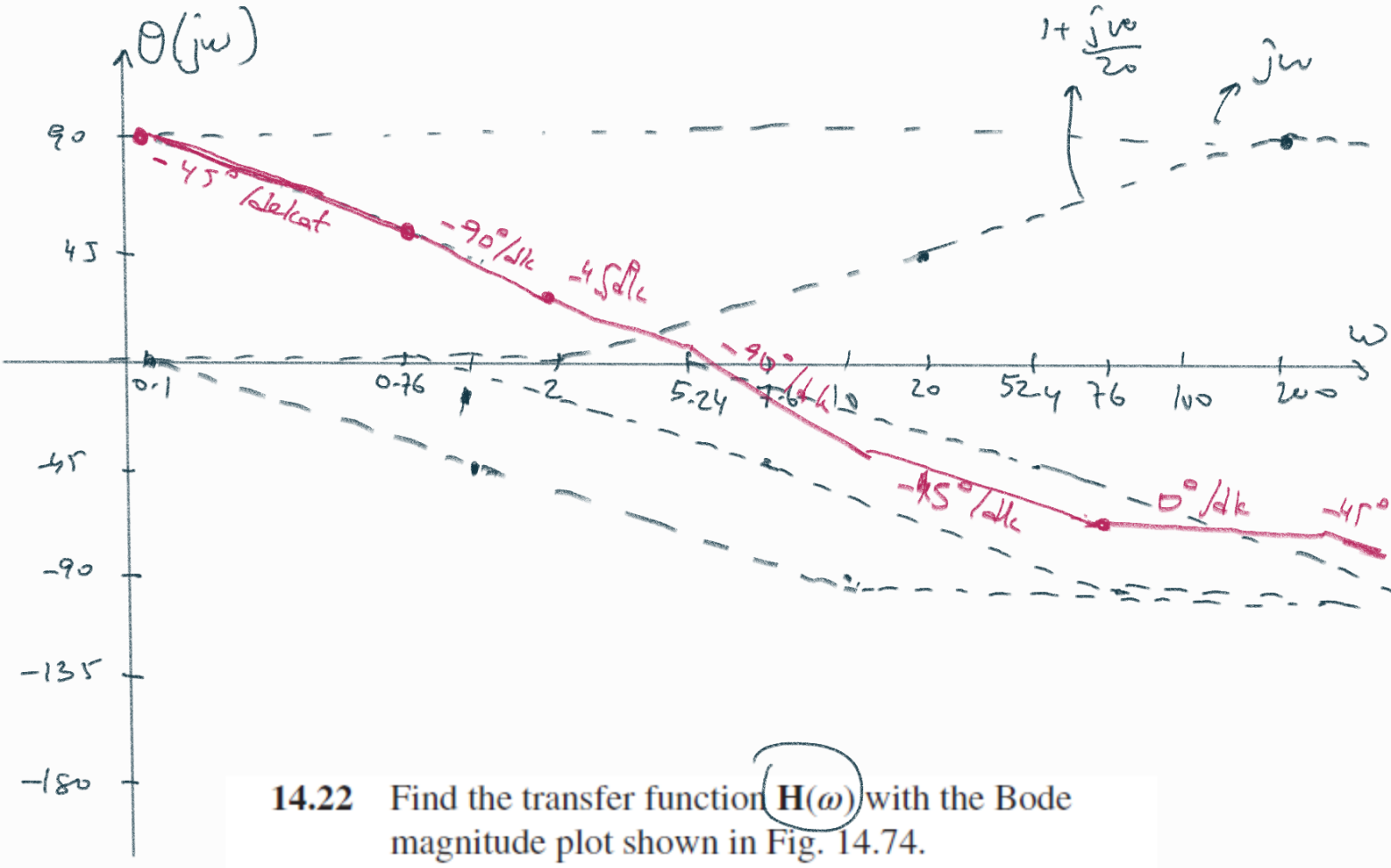

14.22 Find the transfer function $\mathbf{H}(\omega)$ with the Bode magnitude plot shown in Fig. 14.74.

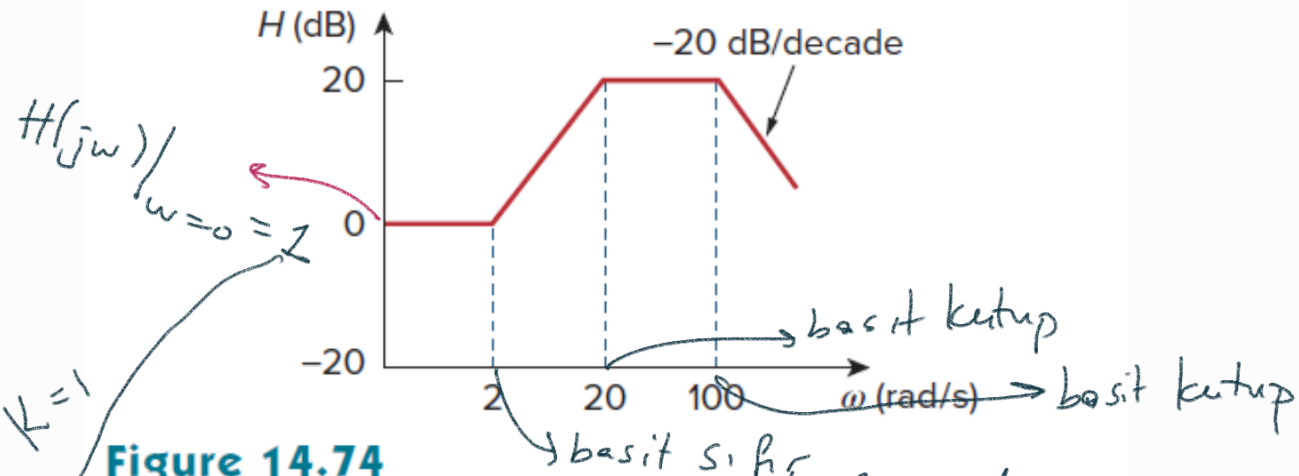

$H(j\omega)\big|_{\omega=0} = 1$

$K = 1$

Figure 14.74
For Prob. 14.22.

$$H(j\omega) = \frac{K\left(1+\frac{j\omega}{2}\right)}{\left(1+\frac{j\omega}{20}\right)\left(1+\frac{j\omega}{100}\right)} \Rightarrow H(s) = \frac{1+\frac{s}{2}}{\left(1+\frac{s}{20}\right)\left(1+\frac{s}{100}\right)}$$

$$= \frac{s+2}{2\left(\frac{s+20}{20}\right)\left(\frac{s+100}{100}\right)}$$

$$H(s) = \frac{1000(s+2)}{(s+20)(s+100)}$$

14.50 Determine what type of filter is in Fig. 14.87. Calculate the corner frequency f_c.

Yüksek geçiren

$$\frac{V_o}{V_i} = H$$

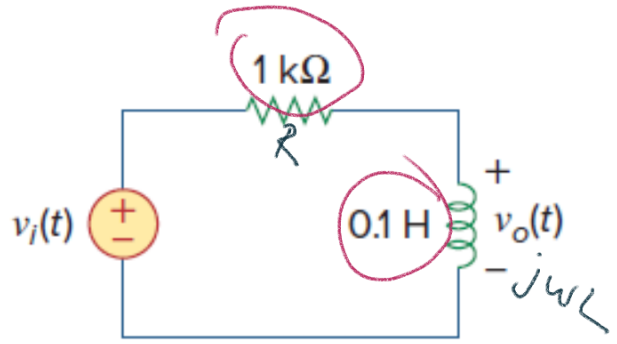

Figure 14.87
For Prob. 14.50.

$$\bar{V}_o = \bar{V}_i \frac{j\omega L}{R + j\omega L}$$

$$H(j\omega) = \frac{\bar{V}_o}{\bar{V}_i} = \frac{j\omega L}{R + j\omega L}$$

$$|H(j\omega)| = \frac{\omega L}{\sqrt{R^2 + \omega^2 L^2}} \Rightarrow H_{max} = 1$$

$$|H(j\omega_c)| = \frac{H_{max}}{\sqrt{2}}$$

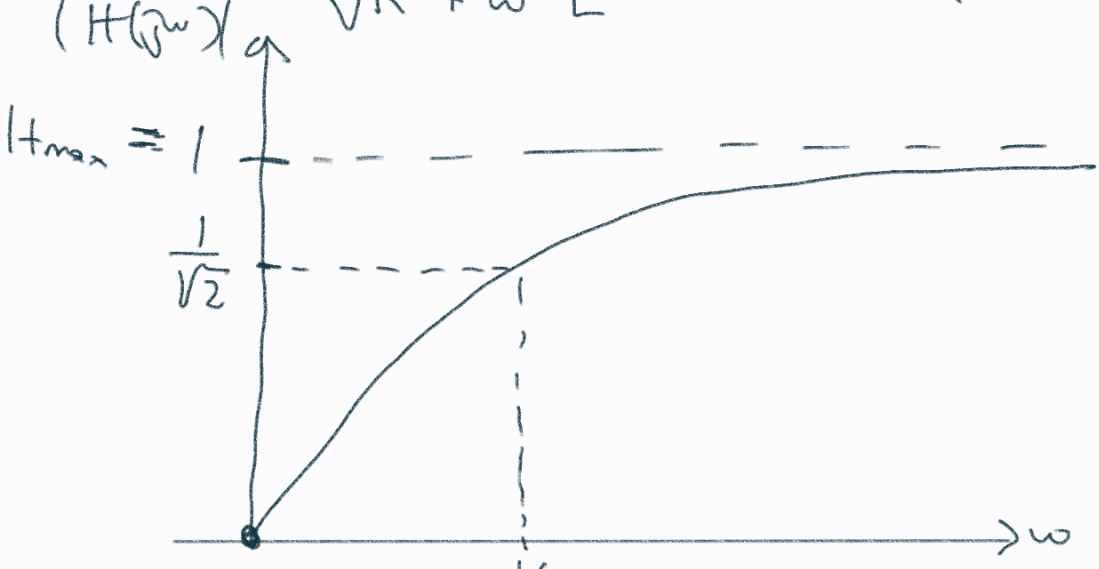

$\omega_c \rightarrow$ Kesim frekansı
Cutoff freq.
Corner freq.

$$\frac{\omega_c L}{\sqrt{R^2+\omega_c^2 L^2}} = \frac{1}{\sqrt{2}} \Rightarrow 2\omega_c^2 L^2 = R^2 + \omega_c^2 L^2$$

$$\omega_c^2 L^2 = R^2$$

$$\omega_c^2 = R^2/L^2 \Rightarrow \omega_c = \frac{R}{L}$$

$$\omega_c = \frac{1000}{0.1} = 10000 \text{ rad/sn}$$

$$f_c = \frac{5000}{\pi} \text{ Hz}$$

14.57 Determine the center frequency and bandwidth of the band-pass filters in Fig. 14.88.

$$H = \frac{\frac{\frac{1}{j\omega}}{\frac{1}{j\omega}+1} \times 1}{1+\left(\frac{1}{j\omega} // \left(1+\frac{1}{j\omega}\right)\right)}$$

$$H(j\omega) = \frac{\frac{1}{1+j\omega}}{1+\frac{\frac{1}{j\omega}\left(1+\frac{1}{j\omega}\right)}{1+\frac{2}{j\omega}}}$$

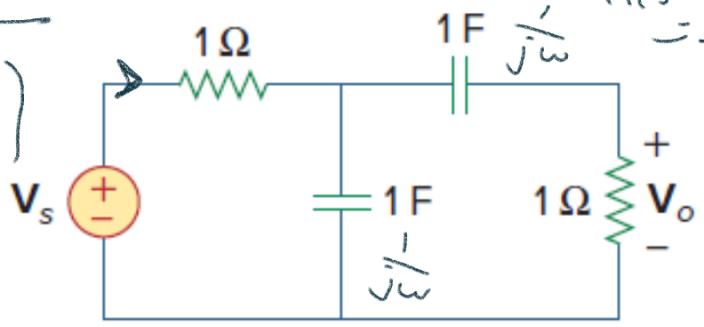

(a)

$$H = \frac{\frac{1}{2+j\omega} j\omega}{j\omega + (1 // 1+j\omega)}$$

$$H = \frac{\frac{j\omega}{2+j\omega}}{j\omega + \frac{1+j\omega}{2+j\omega}} = \frac{\frac{j\omega}{\cancel{2+j\omega}}}{\frac{2j\omega-\omega^2+1+j\omega}{\cancel{2+j\omega}}}$$

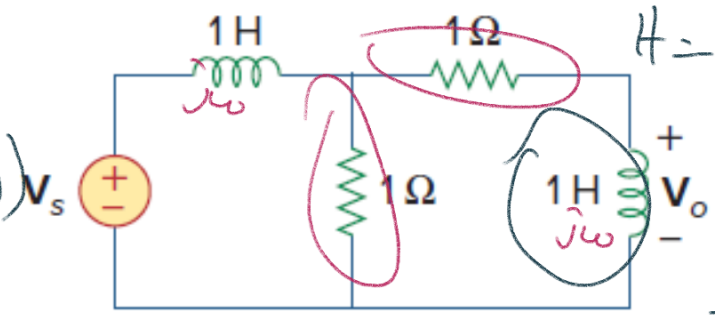

(b)

Figure 14.88
For Prob. 14.57.

a)

$$\frac{\frac{1}{1+j\omega}}{\frac{1+\frac{2}{j\omega}+\frac{1}{j\omega}-\frac{1}{\omega^2}}{1+\frac{2}{j\omega}}} = \frac{\frac{1}{1+j\omega}}{\frac{1+\frac{3}{j\omega}-\frac{1}{\omega^2}}{1+\frac{2}{j\omega}}}$$

$$H(j\omega) = \frac{1}{1+j\omega} \; \frac{\frac{2+j\omega}{j\omega}}{1+\frac{3}{j\omega}-\frac{1}{\omega^2}}$$

$$= \frac{1}{1+j\omega} \; \frac{2+j\omega}{j\omega\left(1+\frac{3}{j\omega}+\frac{1}{(j\omega)^2}\right)} = \frac{2+j\omega}{(1+j\omega)\left(j\omega+3+\frac{1}{j\omega}\right)}$$

$$H(j\omega) = \frac{(2+j\omega)\,j\omega}{(1+j\omega)(3j\omega+3-\omega^2)}$$

$$|H(j\omega)| = \frac{\sqrt{4+\omega^2}\,\omega}{\sqrt{1+\omega^2}\,\sqrt{9\omega^2+(3-\omega^2)^2}}$$

burası sıfır olduğunda tepe noktası olur.

$$\boxed{\omega_0 = \sqrt{3}}$$

$$|H|^2 = \frac{(4+\omega^2)\omega^2}{(1+\omega^2)(9\omega^2+9-6\omega^2+\omega^4)} = \frac{\omega^4+4\omega^2}{(1+\omega^2)(\omega^4+3\omega^2+9)}$$

$$= \frac{\omega^4+4\omega^2}{\omega^4+3\omega^2+9+\omega^6+3\omega^4+9\omega^2} = \frac{\omega^4+4\omega^2}{\omega^6+4\omega^4+12\omega^2+9}$$

$$(4\omega^3+8\omega)(\omega^6+4\omega^4+12\omega^2+9)$$

$$-(\omega^4+4\omega^2)(6\omega^5+16\omega^3+24\omega) = 0$$

$$4\omega^9+16\omega^7+48\omega^5+36\omega^3+8\omega^7+32\omega^5+96\omega^3+72\omega$$

$$-6\omega^9-16\omega^7-24\omega^5-24\omega^7-64\omega^5-96\omega^3 = 0$$

$$-2\omega^9-16\omega^7-8\omega^5+36\omega^3+72\omega = 0$$

$$-2\omega^8-16\omega^6-8\omega^4+36\omega^2+72 = 0$$

$$-162-432-72+108+72 \neq 0$$

b) $$\boxed{H(j\omega) = \frac{j\omega}{3j\omega + 1 - \omega^2}}$$

$$|H(j\omega)| = \frac{\omega}{\sqrt{9\omega^2 + (1-\omega^2)^2}}$$

$$|H|^2 = \frac{\omega^2}{9\omega^2 + 1 + \omega^4 - 2\omega^2} = \frac{\omega^2}{\omega^4 + 7\omega^2 + 1}$$

$$2\cancel{\omega}(\omega^4 + 7\omega^2 + 1) = \omega^{\cancel{2}}(4\omega^3 + 14\omega)$$

$$2\omega^4 + 14\omega^2 + 2 = 4\omega^4 + 14\omega^2$$

$$2 = 2\omega^4$$

$$\omega^4 = 1 \Rightarrow \boxed{\omega = 1} \longrightarrow \text{merkez frekans,}$$

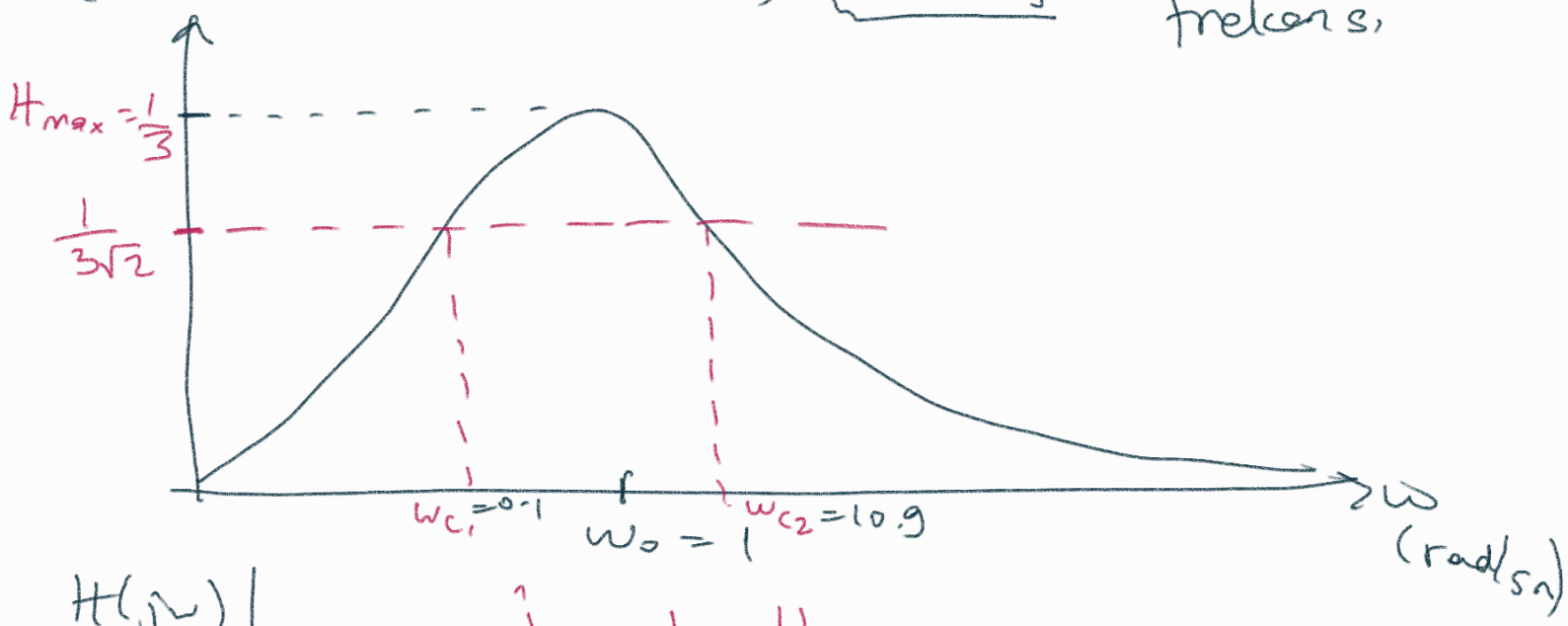

$$H(j\omega)\Big|_{\omega=1} = \frac{j}{3j} = \frac{1}{3} = H_{max}$$

$$\frac{\omega_c}{\sqrt{9\omega_c^2 + (1-\omega_c^2)^2}} = \frac{1}{3\sqrt{2}}$$

$$18\omega_c^2 = 9\omega_c^2 + 1 - 2\omega_c^2 + \omega_c^4$$

$$\omega_c^4 - 11\omega_c^2 + 1 = 0 \qquad \omega_c^2 = A$$

$$A^2 - 11A + 1 = 0$$

$$\frac{11 \mp \sqrt{117}}{2} = \frac{11 \mp 10.8}{2} = (0.1,\ 10.9)\ \text{rad/s}$$

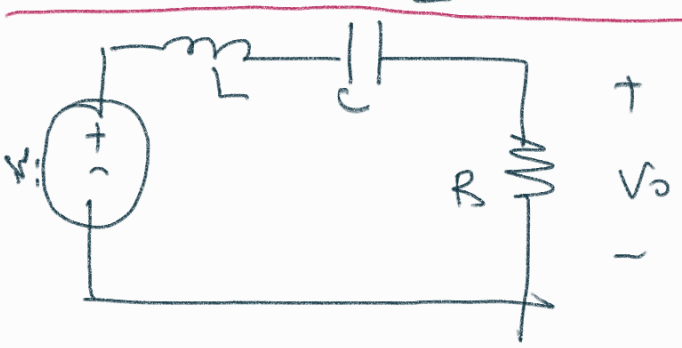

Bant geçiren

$$\omega_0 = \frac{1}{\sqrt{LC}}$$

$$B = \frac{R}{L}$$

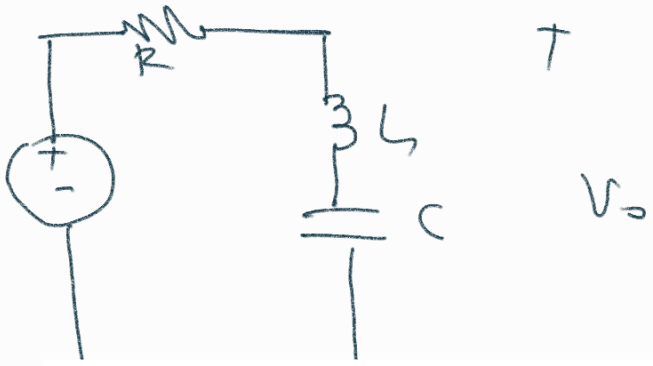

Bant durdurucu

$$\omega_0 = \frac{1}{\sqrt{LC}}$$

$$B = \frac{R}{L}$$

14.61 Find the transfer function for each of the active filters in Fig. 14.90.

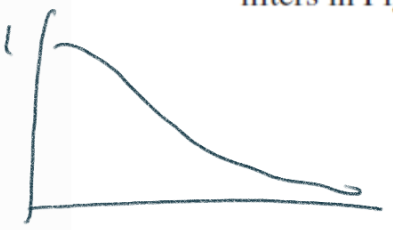

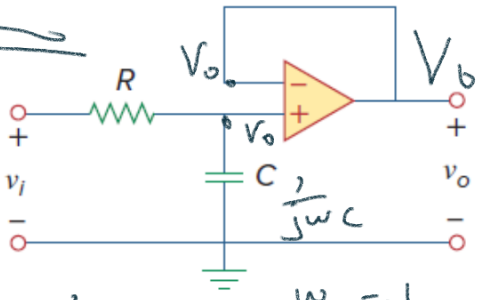

(a)

Alçak geçirgen

$$V_o = V_i \frac{\frac{1}{j\omega C}}{R + \frac{1}{j\omega C}}$$

$$H(j\omega) = \frac{1}{1 + j\omega RC}$$

$$\omega_c = \frac{1}{RC}$$

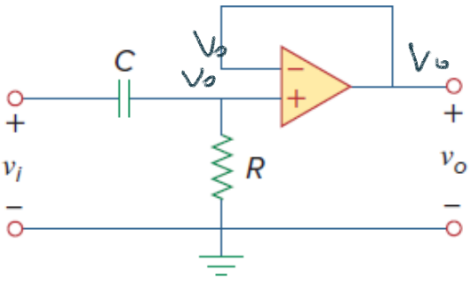

(b)

Figure 14.90
For Probs. 14.61 and 14.62.

Yüksek geçiren

$$V_o = V_i \frac{R}{R + \frac{1}{j\omega C}}$$

$$H(j\omega) = \frac{j\omega RC}{1 + j\omega RC}$$

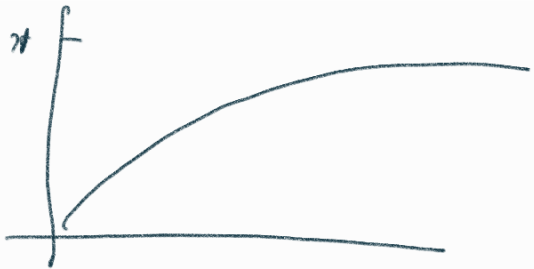

$$\omega_c = \frac{1}{RC}$$

14.69 Design the filter in Fig. 14.94 to meet the following requirements:

(a) It must attenuate a signal at 2 kHz by 3 dB compared with its value at 10 MHz.

(b) It must provide a steady-state output of $v_o(t) = 10\sin(2\pi \times 10^8 t + 180°)$ V for an input $v_s(t) = 4\sin(2\pi \times 10^8 t)$ V.

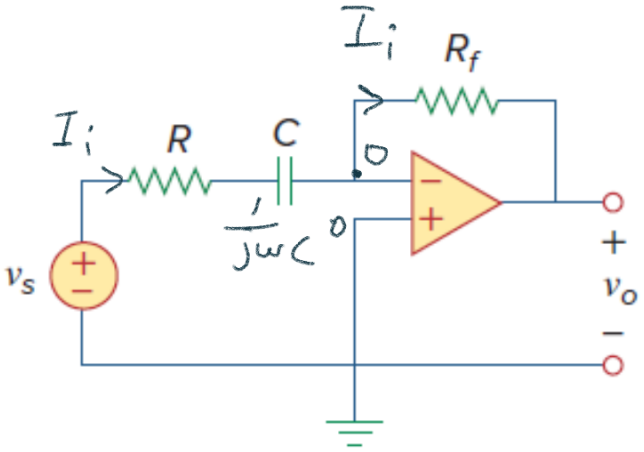

Figure 14.94
For Prob. 14.69.

$$\frac{V_s}{R+\frac{1}{j\omega C}} \Rightarrow V_o = \frac{V_s R_f}{R+\frac{1}{j\omega C}}$$

$$H(j\omega) = \frac{V_o}{V_s} = \frac{-R_f}{R+\frac{1}{j\omega C}} = \frac{-j\omega R_f C}{1+j\omega RC}$$

$$= -\frac{R_f}{R} \cdot \frac{j\omega RC}{1+j\omega RC} \Rightarrow H(s) = -\frac{R_f}{R}\,\frac{sRC}{1+sRC}$$

$$|H(j\omega)| = \frac{R_f}{R}\,\frac{\omega RC}{\sqrt{1+\omega^2R^2C^2}} \rightarrow 1 = \omega^2R^2C^2 \Rightarrow \omega = \frac{1}{RC}$$

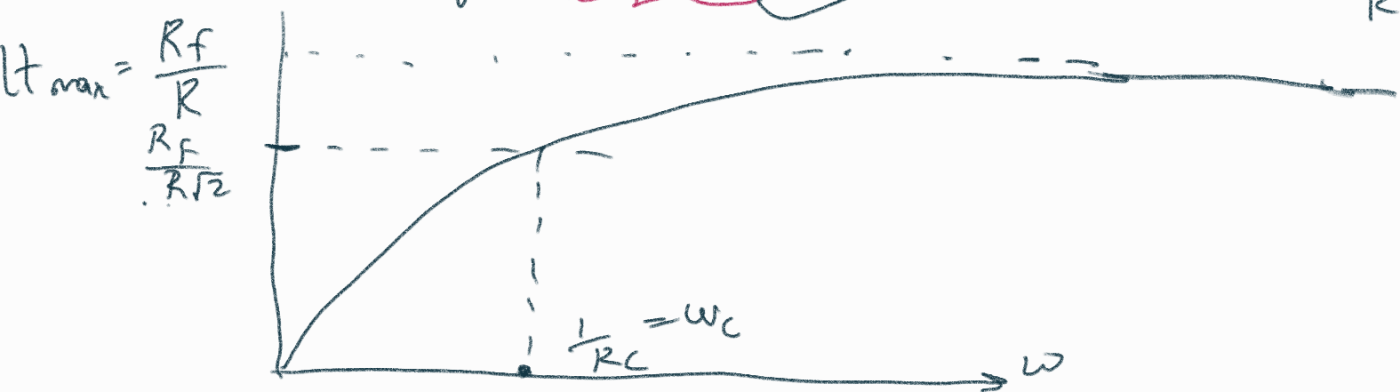

a) $2000 \times 2\pi = \frac{1}{RC}$

b) $\frac{R_f}{R} = \frac{10}{4}$

Tasarla: R, R_f, C

$R = 1k\Omega$ diyelim

$\frac{1}{RC} = 4000\pi$ a)

$$C = \frac{1}{4000\pi \times 1000} = \frac{1}{4\times10^6\pi}$$

b) $\frac{R_f}{R} = \frac{5}{2} \Rightarrow R_f = 2500\,\Omega$ olmalı

$C = 100nF = 10^{-7}$ olsun

$$\frac{1}{RC} = 4000\pi \Rightarrow R = \frac{1}{10^{-7}\times4\times10^3\pi} = \frac{10^4}{4\pi}$$

$= 796\,\Omega$

$R_f = 2.5 \times 796 \cong 2k\Omega$

14.18 For the bandpass filter shown in Fig. P14.18, find (a) ω_o, (b) f_o, (c) Q, (d) ω_{c1}, (e) f_{c1}, (f) ω_{c2}, (g) f_{c2}, and (h) β.

PSPICE MULTISIM

$\omega_{c_2} - \omega_{c_1}$

$Q = \frac{\omega_o}{B}$

Figure P14.18

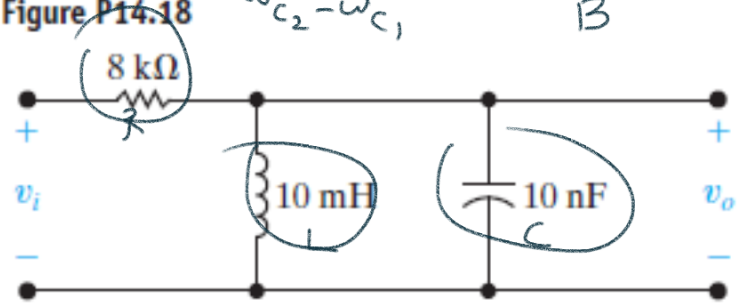

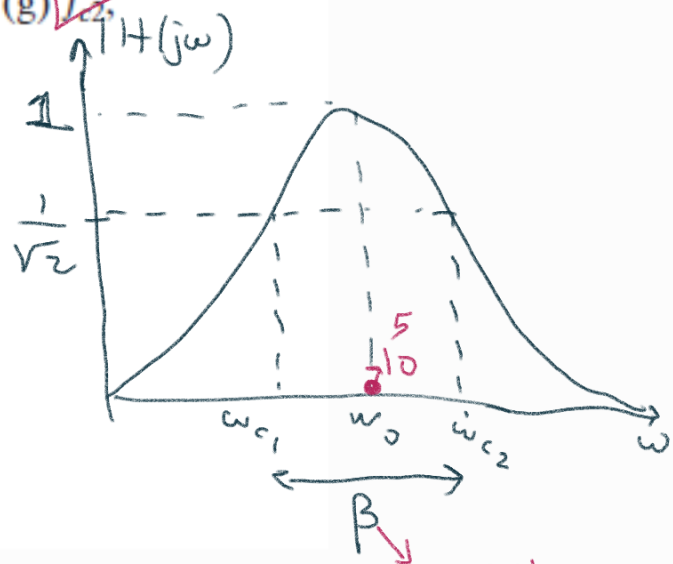

1974 Hz
12400 rad/s

$$\bar{V}_o = \bar{V}_i \frac{\left(j\omega L \,//\, \frac{1}{j\omega C}\right)}{R + \left(j\omega L \,//\, \frac{1}{j\omega C}\right)}$$

$$H(j\omega) = \frac{\bar{V}_o}{\bar{V}_i} =$$

....

$$H(j\omega) = \frac{\dfrac{\dfrac{j\omega L}{j\omega C}}{j\omega L + \dfrac{1}{j\omega C}}}{R + \dfrac{\dfrac{j\omega L}{j\omega C}}{j\omega L + \dfrac{1}{j\omega C}}} = \frac{\dfrac{j\omega L}{1-\omega^2 LC}}{R + \dfrac{j\omega L}{1-\omega^2 LC}}$$

$$H(j\omega) = \frac{j\omega L}{R(1-\omega^2 LC) + j\omega L}$$

$$|H(j\omega)| = \frac{\omega L}{\sqrt{R^2(1-\omega^2 LC)^2 + \omega^2 L^2}}$$

$$\boxed{H_{max} = 1}$$

a) $\boxed{\omega_0 = \frac{1}{\sqrt{LC}}} = \frac{1}{\sqrt{10^{-2} \times 10^{-8}}} = 10^5 \text{ rad/sn}$

b) $f_0 = \frac{10^5}{2\pi} = 15924 \text{ Hz}$

c) $Q = \frac{\omega_0}{\beta} \Rightarrow |H(j\omega_c)| = \frac{1}{\sqrt{2}}$

$$\frac{\omega_c L}{\sqrt{R^2(1-\omega_c^2 LC)^2 + \omega_c^2 L^2}} = \frac{1}{\sqrt{2}}$$

$$\cancel{2}\omega_c^2 L^2 = R^2(1-\omega_c^2 LC)^2 + \cancel{\omega_c^2 L^2}$$

$$\omega_c^2 L^2 = R^2 - 2R^2 LC\omega_c^2 + R^2 L^2 C^2 \omega_c^4$$

$$R^2 L^2 C^2 \omega_c^4 - \omega_c^2(L^2 + 2R^2 LC) + R^2 = 0$$

$$0 = \omega_c^4 - \omega_c^2\left(\frac{1}{R^2C^2} + \frac{2}{LC}\right) + \frac{1}{L^2C^2}$$

$\omega_c^2 = A$

$$0 = A^2 - A\left(\frac{1}{R^2C^2} + \frac{2}{LC}\right) + \frac{1}{L^2C^2}$$

$$A_{1,2} = \frac{\frac{1}{R^2C^2} + \frac{2}{LC} \mp \sqrt{\left(\frac{1}{R^2C^2} + \frac{2}{LC}\right)^2 - \frac{4}{L^2C^2}}}{2}$$

$$\frac{1}{RC} = \frac{1}{8\times10^3 \times 10^{-8}} = \frac{10^5}{8}$$

$$\frac{1}{LC} = \frac{1}{10^{-2}\,10^{-8}} = 10^{10} \qquad \frac{2}{LC} = 2\times10^{10} \qquad \frac{4}{L^2C^2} = 4\times10^{20}$$

$$A_{1,2} = \frac{\frac{10^{10}}{64} + 2\times10^{10} \mp \sqrt{\left(2+\frac{1}{64}\right)^2 10^{20} - 4\times10^{20}}}{2}$$

$$= \frac{2.015625\times10^{10} \mp 0.25\times10^{10}}{2}$$

$$A_{1,2} = \left(0.883\times10^{10},\ 1.133\times10^{4}\right)$$

$$\omega_{c_{1,2}} = 0.94\times10^5,\ 1.064\times10^5$$

$$\omega_{c_2} - \omega_{c_1} = 0.124\times10^5 = 12400 \text{ rad/sn} = \beta$$

d) $\beta = \frac{12400}{2\pi} = 1974$ Hz

$$\left(\frac{1}{RC}\right) = \frac{1}{8\times10^3\times10^{-8}} = \frac{10^5}{8} = 12500 \text{ rad/sn}$$

14.27 Use a 5 nF capacitor to design a series *RLC* bandpass filter, as shown at the top of Fig. 14.27. The center frequency of the filter is 8 kHz, and the quality factor is 2.

DESIGN PROBLEM PSPICE MULTISIM

a) Specify the values of R and L.

b) What is the lower cutoff frequency in kilohertz?

c) What is the upper cutoff frequency in kilohertz?

d) What is the bandwidth of the filter in kilohertz?

14.28 Design a series *RLC* bandpass filter using only

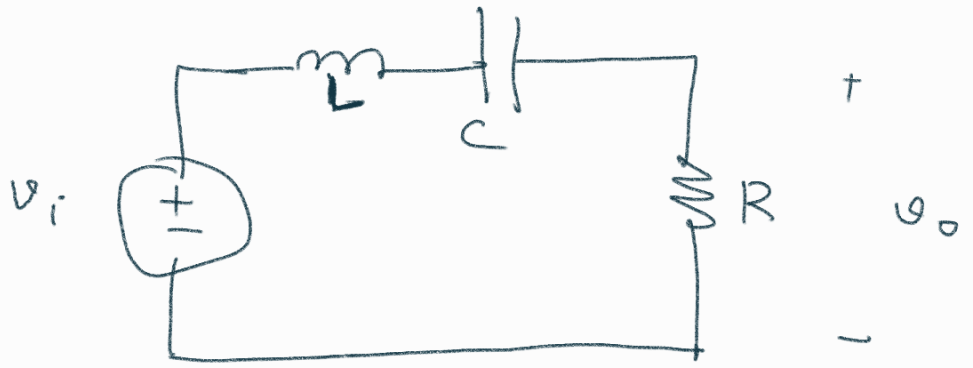

$$H(j\omega) = \frac{R}{R + j\omega L + \frac{1}{j\omega C}} = \frac{R\, j\omega C}{j\omega RC + 1 - \omega^2 LC}$$

$$= \frac{j\omega RC}{j\omega RC + 1 - \omega^2 LC} \Rightarrow |H| = \frac{\omega RC}{\sqrt{\omega^2 R^2 C^2 + (1-\omega^2 LC)^2}}$$

$\omega_0 = \frac{1}{\sqrt{LC}}$'de $\quad |H| = 1 = H_{max}$

$$\omega_0 = 8000 \times 2\pi = 16000\pi$$

$$Q = \frac{\omega_0}{B} = \frac{16000\pi}{B} = 2 \Rightarrow \boxed{B_1 = 8000\pi} \text{ olmalı.}$$

$$\frac{1}{\sqrt{2}} = \frac{\omega_c RC}{\sqrt{\omega_c^2 R^2 C^2 + (1-\omega^2 LC)^2}}$$

$$\cancel{\omega_c^2 R^2 C^2} + 1 - 2\omega_c^2 LC + \omega_c^4 L^2 C^2 = \cancel{2}\omega_c^2 R^2 C^2$$

$$\omega_c^4 L^2 C^2 - \omega_c^2 (2LC + R^2 C^2) + 1 = 0$$

$$\omega_c^4 - \omega_c^2 \left(\frac{2}{LC} + \frac{R^2}{L^2}\right) + \frac{1}{L^2 C^2} = 0$$

$$A^2 - A\left(\frac{2}{LC} + \frac{R^2}{L^2}\right) + \frac{1}{L^2 C^2} = 0$$

$$A_{1,2} = \frac{\frac{2}{LC} + \frac{R^2}{L^2} \mp \sqrt{\left(\frac{2}{LC} + \frac{R^2}{L^2}\right)^2 - \frac{4}{L^2 C^2}}}{2}$$

$$= \frac{\frac{2}{LC} + \frac{R^2}{L^2} \mp \sqrt{\cancel{\frac{4}{L^2C^2}} + \frac{4R^2}{L^3C} + \frac{R^4}{L^4} - \cancel{\frac{4}{L^2C^2}}}}{2}$$

$$A_{1,2} = \frac{\frac{2}{LC} + \frac{R^2}{L^2} \mp \sqrt{\frac{R^4}{L^4}\left(1 + \frac{4L}{C}\right)}}{2} =$$

$A_1 = w_{c_1}^2$

$A_2 = w_{c_2}^2$

$$\underbrace{A_2 - A_1}_{\frac{1}{2}\sqrt{\frac{R^4}{L^2}\left(1+\frac{4L}{C}\right)}} = w_{c_2}^2 - w_{c_1}^2 = \underbrace{(w_{c_2} - w_{c_1})}_{\beta}(w_{c_2} + w_{c_1})$$

$$\frac{1}{\sqrt{2}} = \frac{wRC}{\sqrt{w^2R^2C^2 + (1 - w^2LC)^2}}$$

$$H(jw) = \frac{R}{R + jwL + \frac{1}{jwC}}$$

$$|H| = \frac{R}{\sqrt{R^2 + \left(wL - \frac{1}{wC}\right)^2}} = \frac{1}{\sqrt{2}}$$

$$\sqrt{2}R = \sqrt{R^2 + \left(wL - \frac{1}{wC}\right)^2}$$

$$\mp\sqrt{2}R = R^2 + \left(wL - \frac{1}{wC}\right)^2$$

$$\cancel{2}R^2 = \left(wL - \frac{1}{wC}\right)^2 + \cancel{R^2}$$

$$\mp R = wL - \frac{1}{wC}$$

$$w^2LC - 1 \pm wRC = 0$$

$$w^2LC \pm wRC - 1 = 0$$

$$w^2 \pm w\frac{R}{L} - \frac{1}{LC} = 0$$

$$\omega_{1,2} = \frac{\mp \frac{R}{L} \mp \sqrt{\frac{R^2}{L^2} + \frac{4}{LC}}}{2} = \mp \frac{R}{2L} + \sqrt{\left(\frac{R}{2L}\right)^2 + \frac{1}{LC}}$$

$$\boxed{\omega_{c_2} - \omega_{c_1} = \frac{R}{L}}$$

$$\omega_0 = \frac{1}{\sqrt{LC}} = 16000\pi \Rightarrow \frac{1}{16000^2\pi^2 \times 5\times10^{-9}} = L$$

$5nF$

$$L = \frac{1}{256\pi^2 10^{-3} \times 5} = \frac{1000}{256\pi^2 \times 5} = 79mH$$

$$\frac{R}{L} = 8000\pi$$

$$R = 79\times\cancel{10^{-3}} \times \cancel{8000}\pi = 1985\,\Omega$$

$$\omega_{c_{1,2}} = \pm\frac{R}{2L} + \sqrt{\left(\frac{R}{2L}\right)^2 + \frac{1}{LC}}$$

$$= \pm B/2 + \sqrt{\left(\frac{B}{2}\right)^2 + \omega_0^2}$$

$$= \pm 4000\pi + \sqrt{4000^2\pi^2 + 8000^2\pi^2}$$

$$= \pm 4000\pi + 1000\pi\sqrt{16+64}$$

$$\omega_{c_{2,1}} = \left(\sqrt{80} \mp 4\right)1000\pi$$

$$= (4940\pi,\ 12940\pi)$$ kesin fr.

14.32 A block diagram of a system consisting of a sinusoidal voltage source, an *RLC* series bandpass filter, and a load is shown in Fig. P14.32. The internal impedance of the sinusoidal source is $80 + j0\ \Omega$, and the impedance of the load is $480 + j0\ \Omega$.

The *RLC* series bandpass filter has a 20 nF capacitor, a center frequency of 50 krad/s, and a quality factor of 6.25.

a) Draw a circuit diagram of the system.

b) Specify the numerical values of L and R for the filter section of the system.

c) What is the quality factor of the interconnected system?

d) What is the bandwidth (in hertz) of the interconnected system?

Figure P14.32

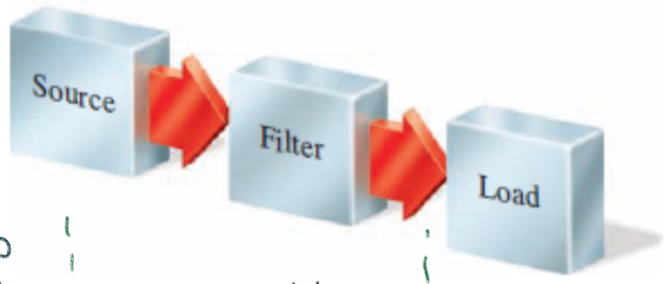

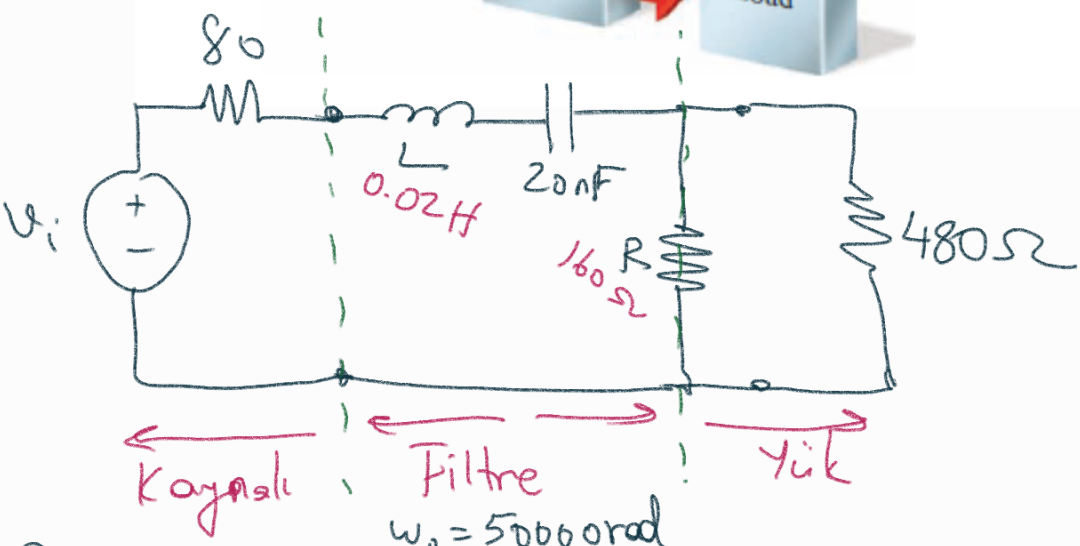

b)

$\omega_0 = 50000 \frac{rad}{sn}$

$Q = 6.25$

$Q = \frac{\omega_0}{B} = \frac{50000}{B} = 6.25$

$B = 8000 rad/sn = \frac{R}{L}$

$\omega_0 = 50000 = \frac{1}{\sqrt{LC}} \Rightarrow L = \frac{1}{50000^2 \times 20 \times 10^{-9}}$

$= \frac{10}{25 \times 20} = 0.02\ H$

$$\frac{R}{L} = \underline{\underline{8000}} \Rightarrow \quad R = 8000 \times 0.02$$
$$= 160\,\Omega$$

c) $160 \,//\, 480 = 120\,\Omega$

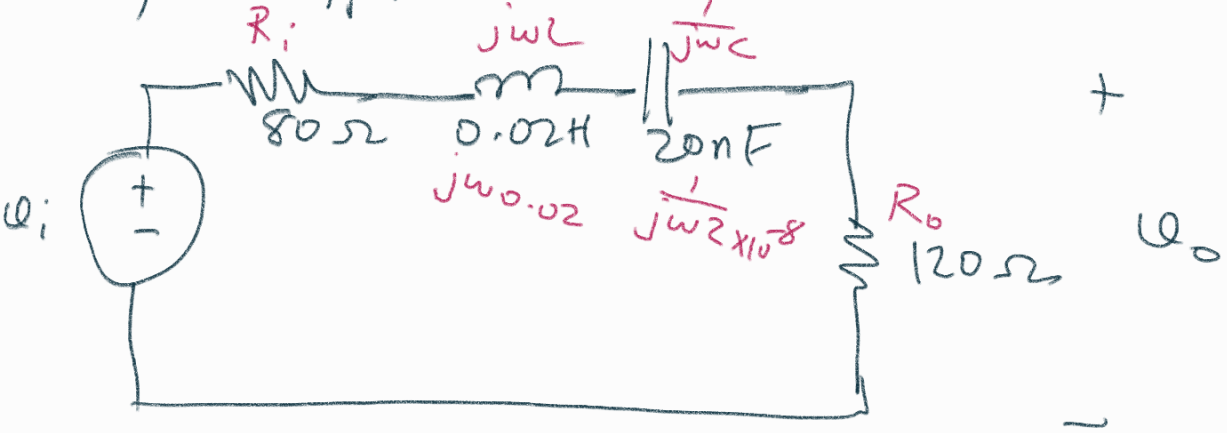

$$|H_{max}| = \frac{120}{120+80} = \underline{\underline{0.6}}$$

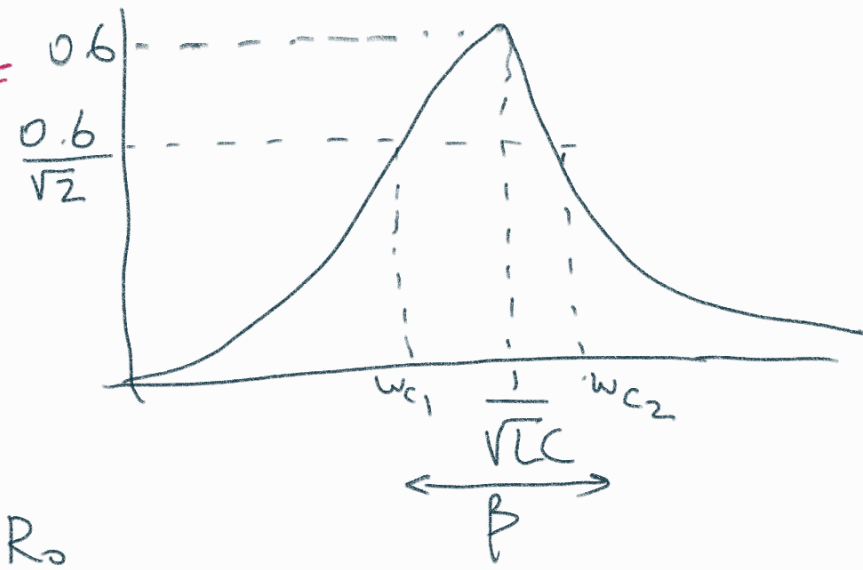

$$H(j\omega) = \frac{R_o}{R_i + j\omega L + \frac{1}{j\omega C} + R_o}$$

$$= \frac{R_o}{R_i + R_o + j\left(\omega L - \frac{1}{\omega C}\right)}$$

$$|H(j\omega_c)| = \frac{R_o}{\sqrt{(R_i+R_o)^2 + \left(\omega L - \frac{1}{\omega C}\right)^2}} = \frac{R_o}{(R_i+R_o)\sqrt{2}}$$

$$\cancel{2} R_o^2 (R_i+R_o)^2 = \cancel{R_o^2 (R_i+R_o)^2} + R_o^2 \left(\omega L - \frac{1}{\omega C}\right)^2$$

$$\mp R_o (R_i + R_o) = R_o \left(\omega L - \frac{1}{\omega C}\right)$$

$$0 = R_o \omega^2 LC - R_o \pm R_o (R_i + R_o)\omega C$$

$$0 = \omega^2 \pm \frac{R_i + R_o}{L}\omega - \frac{1}{LC}$$

$$\omega_{c_{12}} = \frac{\mp \frac{R_i + R_o}{L} \mp \sqrt{\left(\frac{R_i + R_o}{L}\right)^2 + \frac{4}{LC}}}{2}$$

$$= \mp \frac{R_i + R_o}{2L} + \sqrt{\left(\frac{R_i + R_o}{2L}\right)^2 + \frac{1}{LC}}$$

$$\omega_{c_2} - \omega_{c_1} = \boxed{\beta = \frac{R_i + R_o}{L}} = \frac{80 + 120}{0.02} = 10000 \frac{rad}{sn}$$

B, 8000'den 10000'e çıktı $\left(\frac{rad}{sn}\right)$

B, $\frac{4000}{\pi}$ " $\frac{5000}{\pi}$ " (hz)

$\omega_0 = \frac{1}{\sqrt{LC}}$, DEĞİŞMEDİ.

$Q = \frac{50000}{10000} = 5$, AZALDI

14.42 Use a 500 nF capacitor to design a bandreject filter, as shown in Fig. P14.42. The filter has a center frequency of 4 kHz and a quality factor of 5. $\longrightarrow 5 = \frac{8000\pi}{B}$

DESIGN PROBLEM | PSPICE | MULTISIM

a) Specify the numerical values of R and L.

b) Calculate the upper and lower corner, or cutoff, frequencies in kilohertz.

$\boxed{B = 1600\pi}$

c) Calculate the filter bandwidth in kilohertz.

Figure P14.42

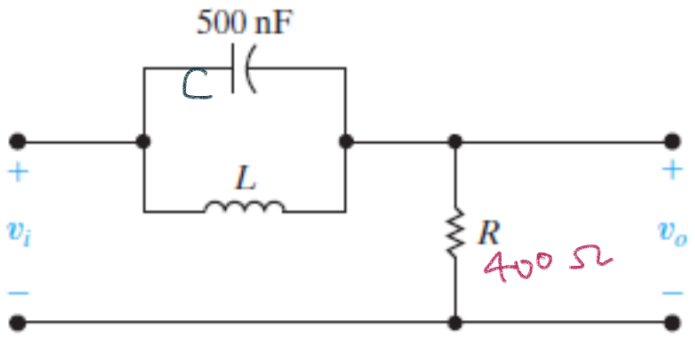

$$H(j\omega) = \frac{R}{R + j\omega L \,//\, \frac{1}{j\omega C}} = \frac{R}{R + \frac{\frac{j\omega L}{j\omega C}}{j\omega L + \frac{1}{j\omega C}}}$$

$$= \frac{R}{R + \frac{j\omega L}{1-\omega^2 LC}} = \frac{R(1-\omega^2 LC)}{R(1-\omega^2 LC) + j\omega L}$$

$\boxed{\omega_0 = \frac{1}{\sqrt{LC}}}$ oldugunda $H(j\omega_0) = 0$ olur.

$\omega_0 = 8000\pi = \frac{1}{\sqrt{LC}}$

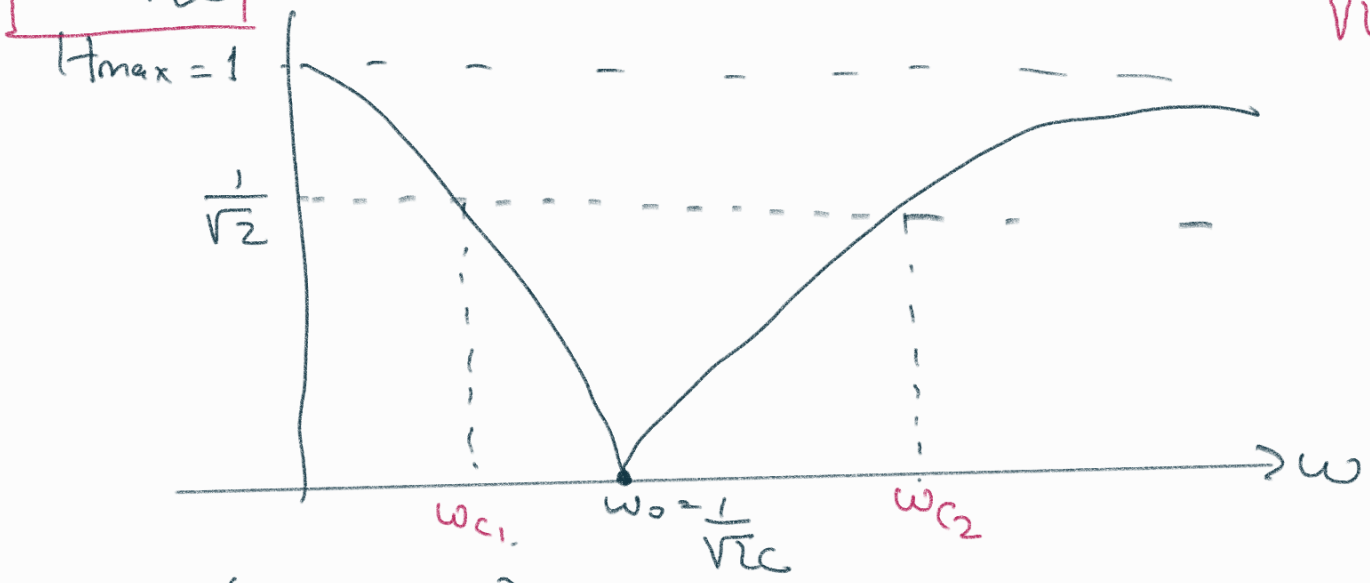

$$\frac{R(1-\omega^2 LC)}{\sqrt{R^2(1-\omega^2 LC)^2 + \omega^2 L^2}} = \frac{1}{\sqrt{2}}$$

$$\cancel{2} R^2(1-\omega^2 LC)^2 = \cancel{R^2(1-\omega^2 LC)^2} + \omega^2 L^2$$

$$R(1-\omega^2 LC) = \mp \omega L$$

$$0 = \omega^2 RLC \mp \omega L - R$$

$$= \omega^2 \mp \omega \frac{1}{RC} - \frac{1}{LC}$$

$$\omega_{1,2} = \frac{\pm \frac{1}{RC} \mp \sqrt{\frac{1}{R^2C^2} + \frac{4}{LC}}}{2}$$

$$= \pm \frac{1}{2RC} + \sqrt{\frac{1}{(2RC)^2} + \frac{1}{LC}}$$

$$= \pm 800\pi + \sqrt{(800\pi)^2 + (8000\pi)^2}$$

$$\beta = \omega_{c2} - \omega_{c1} = \frac{1}{RC} = 1600\pi$$

$$\frac{1}{1600\pi \times 500\times10^{-9}} = R$$

$$\frac{10^5}{80\pi} = \frac{10^4}{8\pi} = R \cong 400\,\Omega$$

$$\frac{1}{\sqrt{LC}} = 8000\pi$$

$$L = \frac{1}{64\times10^6 \times \pi^2 \times 5\times10^{-7}} = \frac{10}{320\pi^2} \simeq 3.2\,mH$$

$$\omega_{c12} = \pm 800\pi + \sqrt{64.64}\ 1000\pi$$

$$8040\pi \pm 800\pi = 8840\pi,\ 7240\pi$$

$$\downarrow \qquad \downarrow$$

$$4420\,Hz,\ 3620\,Hz$$

c) $\beta = \frac{1600\pi}{2\pi} = 800\,Hz$

bant genişliği

14.48 Given the following voltage transfer function:

$$H(s) = \frac{V_o}{V_i}$$

$$= \frac{25 \times 10^6}{s^2 + 1000s + 25 \times 10^6}.$$

a) At what frequencies (in radians per second) is the magnitude of the transfer function equal to unity? 0, 7000 rad/sn

b) At what frequency is the magnitude of the transfer function maximum?

c) What is the maximum value of the transfer function magnitude?

$$H(j\omega) = \frac{25\times10^6}{-\omega^2 + j1000\omega + 25\times10^6}$$

a) $$|H(j\omega)| = \frac{25\times10^6}{\sqrt{(1000\omega)^2 + (25\times10^6-\omega^2)^2}} = 1$$

$$(25\times10^6)^2 = 10^6\omega^2 + (25\times10^6-\omega^2)^2$$

$$\cancel{(25\times10^6)^2} = 10^6\omega^2 + \cancel{(25\times10^6)^2} - 50\times10^6\omega^2 + \omega^4$$

$$0 = \omega^4 - 49\times10^6\omega^2$$

$$0 = \omega^2(\omega^2 - 49\times10^6)$$

$\omega = 0 \rightarrow |H| = 1$

$\omega = 7000$ rad/sn $\rightarrow |H| = 1$

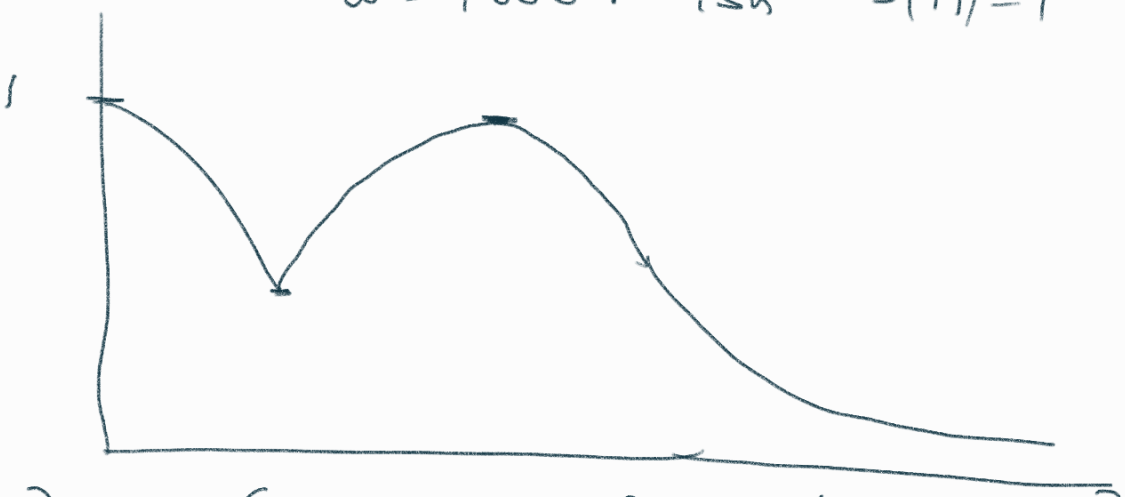

b) $$\min\left\{10^6\omega^2 + (25\times10^6-\omega^2)^2\right\}$$

$$2\times10^6\omega + 2(25\times10^6-\omega^2)(-2\omega) = 0$$

$$2\times10^6\omega - 100\times10^6\omega + 4\omega^3 = 0$$

$$\omega(4\omega^2 - 98\times10^6) = 0$$

$\boxed{\omega = 0} \longrightarrow |H| = 1$

$$\omega = \sqrt{\frac{49}{2}}\times10^3$$

AKTİF FİLTRELER (Butterworth)

1. derece alçak geçirgen filtre.

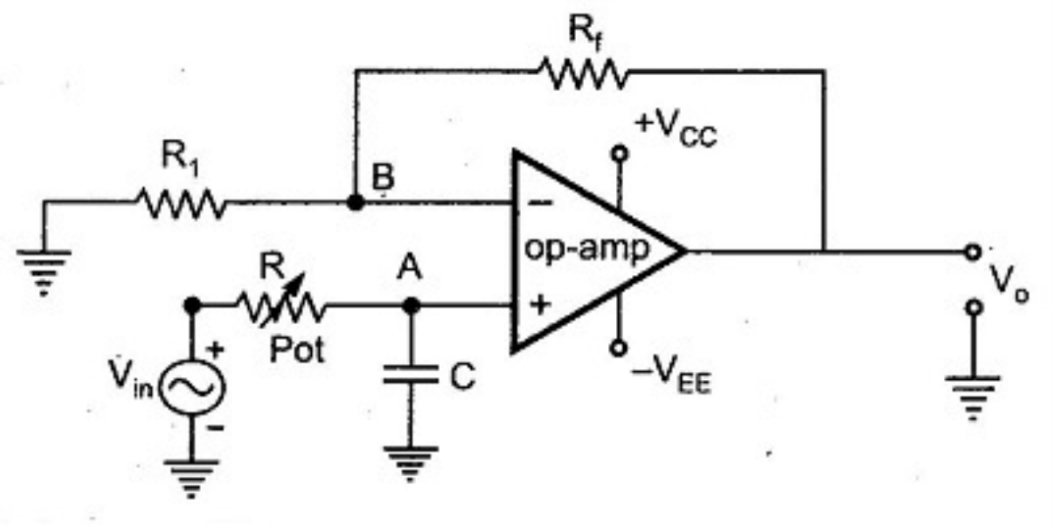

Fig. 2.74 First order low pass butterworth filter

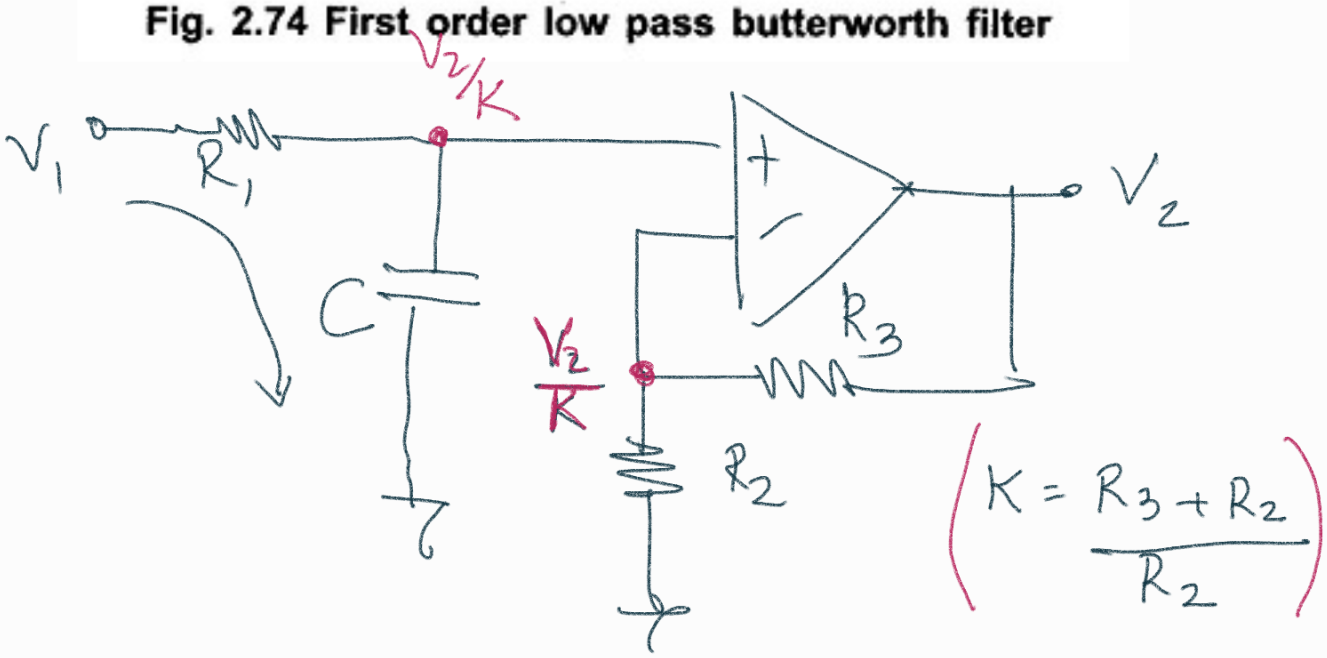

$$\left(K = \frac{R_3 + R_2}{R_2}\right)$$

$$\frac{V_1 - \frac{V_2}{K}}{R_1} = \frac{V_2}{K\frac{1}{j\omega C}} \Rightarrow \frac{V_1}{R_1} = \frac{V_2}{KR_1} + \frac{V_2\, j\omega C}{K}$$

$$\frac{V_1}{\cancel{R_1}} = \frac{V_2}{K}\left(\frac{1}{\cancel{R_1}} + \frac{j\omega C R_1}{\cancel{R_1}}\right)$$

$$\frac{V_2}{V_1} = H(j\omega) = \frac{K}{1 + j\omega C R_1} = \frac{K\frac{1}{R_1 C}}{j\omega + \frac{1}{R_1 C}}$$

Genel form: $\dfrac{K\,\omega_c}{s + b\,\omega_c}$

K → kazanç

ω_c → kesim frek.

b → 1 (Butterworth için)

Burada:

$$K = \frac{R_2 + R_3}{R_2}$$

$$\omega_c = \frac{1}{R_1 C}$$

$$b = 1$$

Birinci Derece Yüksek geçirgen

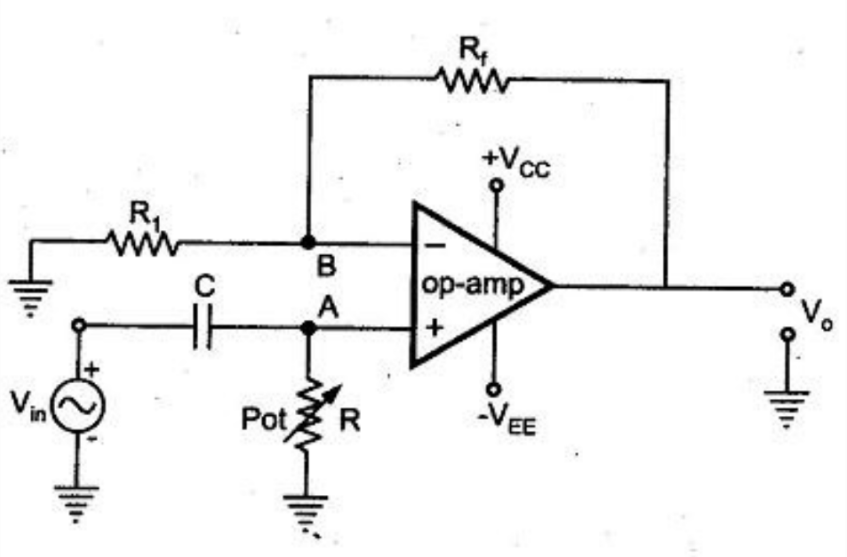

Fig. 2.79 First order high pass Butterworth filter

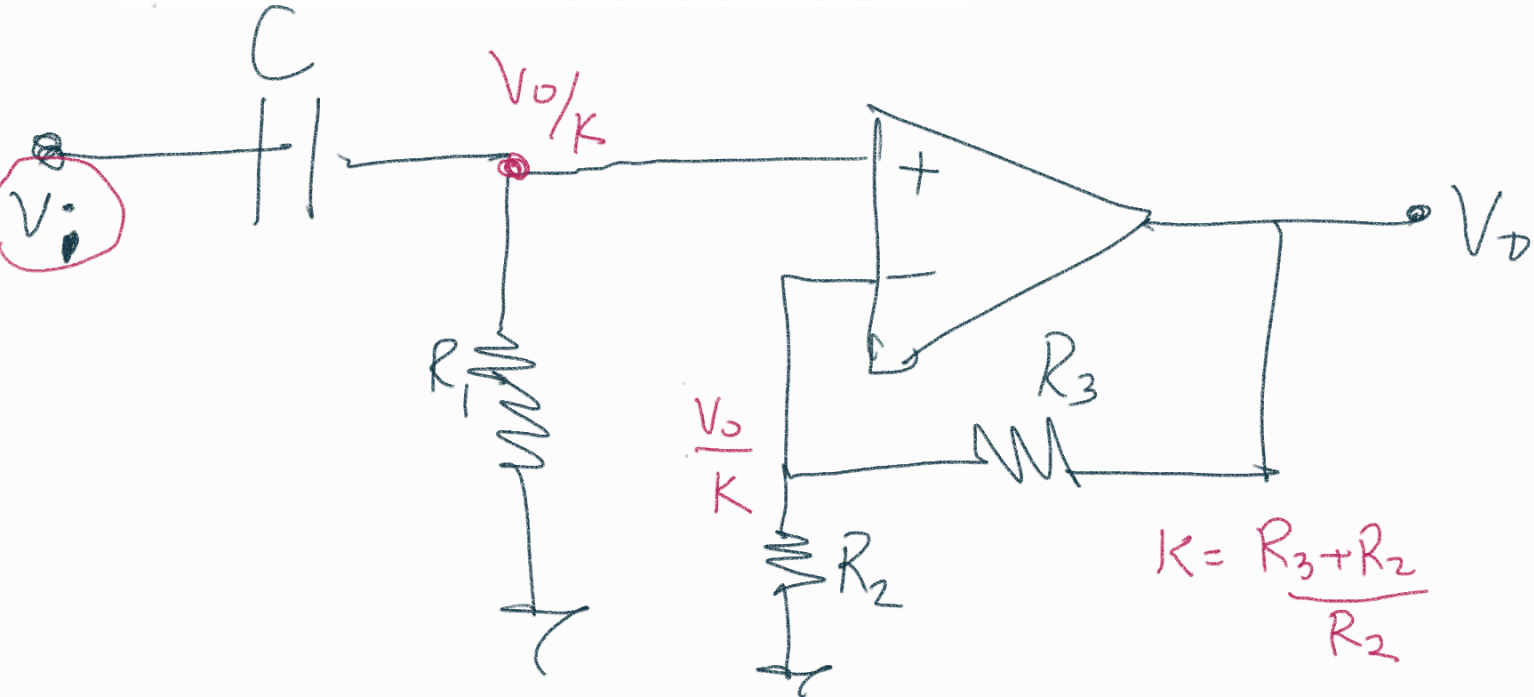

$$\left(V_i - \frac{V_o}{K}\right) j\omega C = \frac{V_o}{K R_1}$$

$$V_i \, j\omega C = \frac{V_o}{K}\left(j\omega C + \frac{1}{R_1}\right)$$

$$\frac{V_o}{V_i} = \frac{j\omega C \cdot K}{j\omega C + \frac{1}{R_1}} = K \frac{(j\omega)}{j\omega + \frac{1}{R_1 C}}$$

Genel form: $H(s) = K \dfrac{s}{s + \frac{\omega_c}{b}}$

K → Kazanç.

ω_c → Kesim fr.

b → 1

Bu demrede:

$$\left(\begin{aligned} K &= \frac{R_2 + R_3}{R_2} \\ \omega_c &= \frac{1}{R_1 C} \\ b &= 1 \end{aligned} \right)$$

Not: Butterworth $(b=1)$

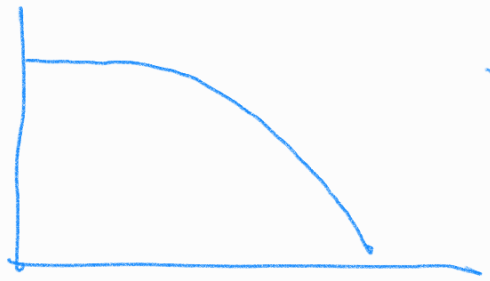

Chebyshev $(b \neq 1)$

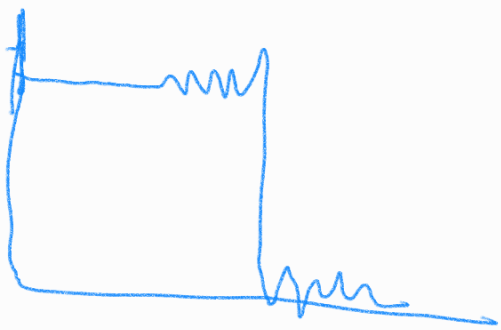

1. derece Bant Geçirgen Filtre

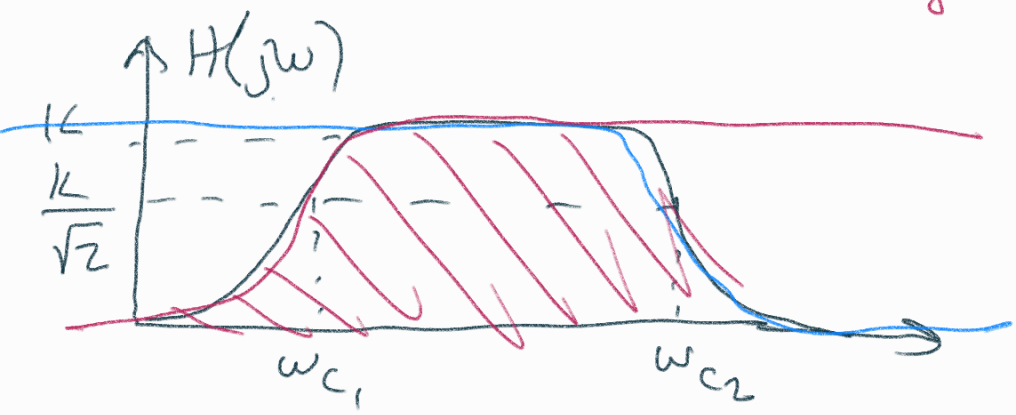

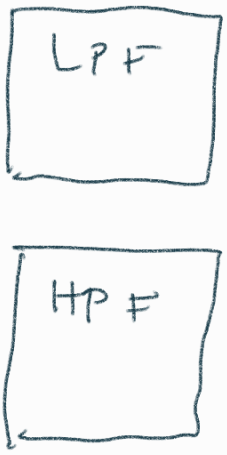

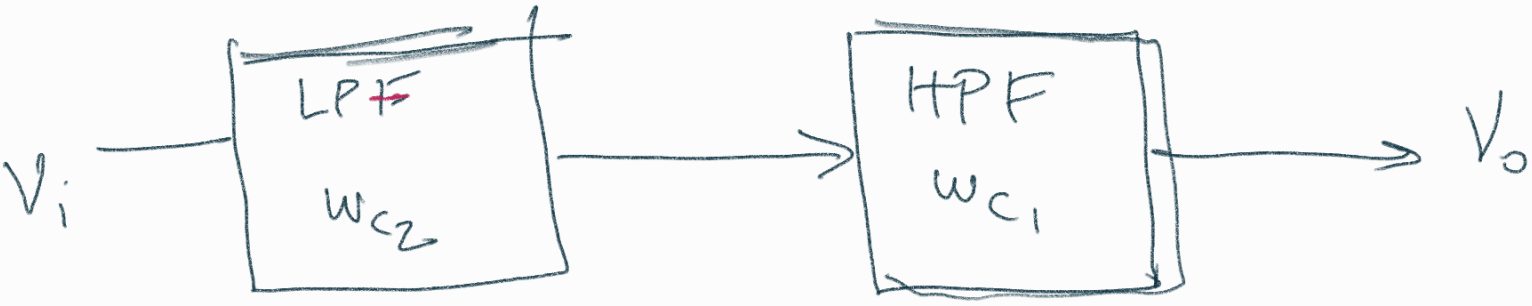

1. derece bant durdurar:

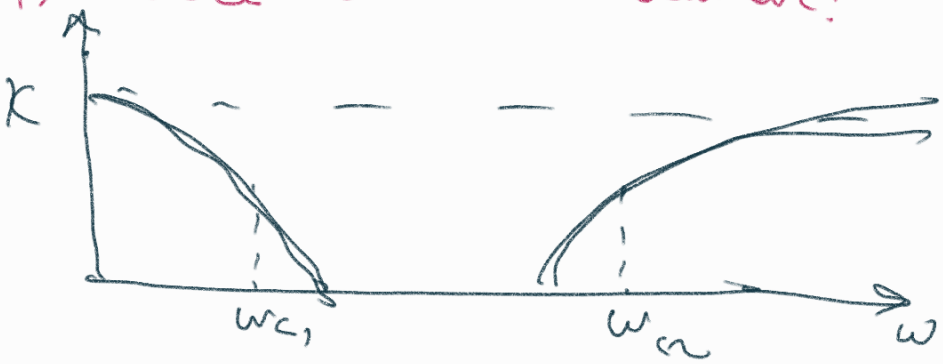

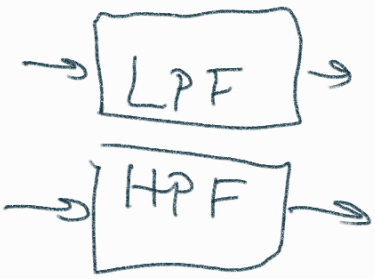

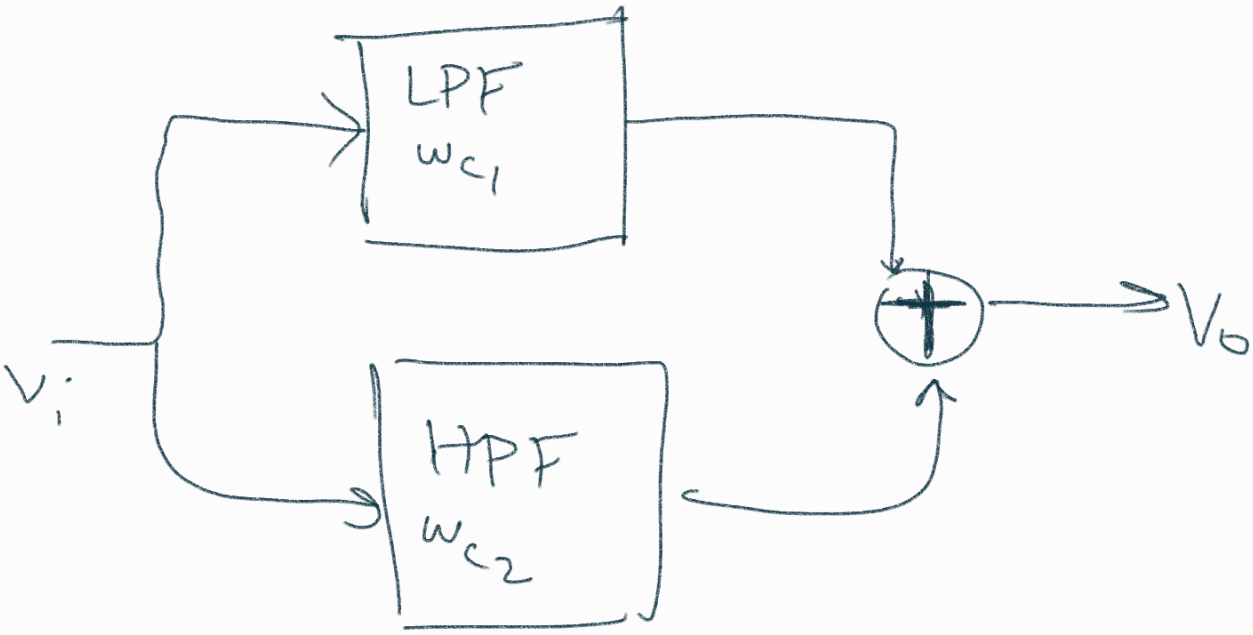

2. derece Düşük Geçiren Filtre

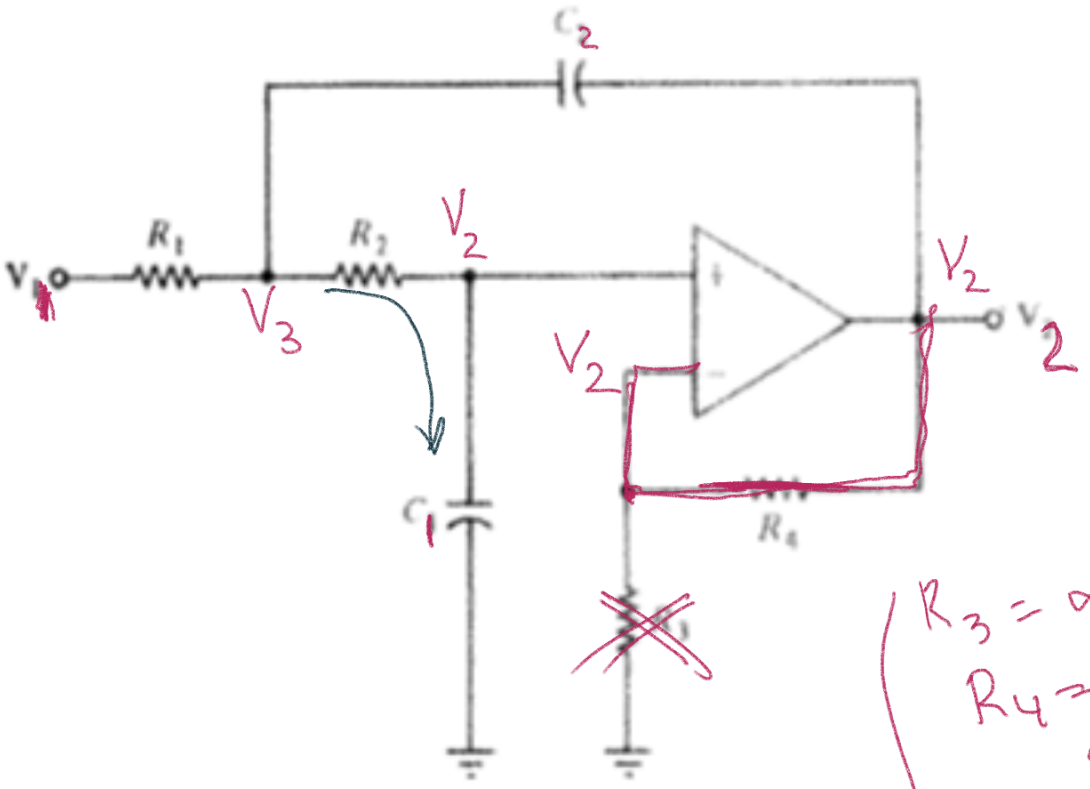

FIGURE 5.12 Second-order VCVS low-pass filter circuit.

($R_3 = \infty$, $R_4 = 0$ alalım yani $K = 1$)

(1) $$\frac{V_1 - V_3}{R_1} = \frac{V_3 - V_2}{R_2} + (V_3 - V_2)\, j\omega C_2$$

(2) $$\frac{V_3 - V_2}{R_2} = V_2\, j\omega C_1$$

(1) $$\frac{V_1}{R_1} = V_3\left(\frac{1}{R_1} + \frac{1}{R_2} + j\omega C_2\right) - V_2\left(\frac{1}{R_2} + j\omega C_2\right)$$

(2) $$\frac{V_3}{R_2} = V_2\left(\frac{1}{R_2} + j\omega C_1\right)$$

$$\boxed{V_3 = V_2\left(1 + j\omega C_1 R_2\right)}$$

$$\frac{V_1}{R_1} = V_2\left[(1+j\omega C_1 R_2)\left(\frac{1}{R_1}+\frac{1}{R_2}+j\omega C_2\right) - \frac{1}{R_2} - j\omega C_2\right]$$

$$\frac{V_1}{R_1} = V_2\left[\frac{1}{R_1} + \cancel{\frac{1}{R_2}} + \cancel{j\omega C_2} + j\omega C_1 \frac{R_2}{R_1} + j\omega C_1 - \omega^2 C_1 C_2 R_2 \cancel{-\frac{1}{R_2}} \cancel{- j\omega C_2}\right]$$

$$\frac{V_1}{R_1} = V_2\left[\frac{1}{R_1} + j\omega\left(C_1 \frac{R_2}{R_1} + C_1\right) - \omega^2 C_1 C_2 R_2\right]$$

$$V_1 = V_2\left[1 + j\omega\left(C_1 R_2 + C_1 R_1\right) - \omega^2 C_1 C_2 R_1 R_2\right]$$

$$\frac{V_2}{V_1} = H(j\omega) = \frac{1}{1 + j\omega C_1 (R_1 + R_2) - \omega^2 C_1 C_2 R_1 R_2}$$

$$= \frac{\frac{1}{C_1 C_2 R_1 R_2}}{\frac{1}{C_1 C_2 R_1 R_2} + j\omega \frac{1}{C_2}\frac{R_1+R_2}{R_1 R_2} - \omega^2}$$

Genel form:

$(s = j\omega)$ $$H(s) = \frac{K\, b\, \omega_c^2}{s^2 + a\,\omega_c\, s + b\,\omega_c^2}$$ → kesim

Burada: $K = 1$

$b = 1$ (Butterworth

$$\omega_c = \frac{1}{\sqrt{R_1 R_2 C_1 C_2}}$$

$$\rightarrow a\,\omega_c = \frac{1}{C_2}\,\frac{R_1+R_2}{R_1 R_2}$$

$$\rightarrow b\,\omega_c^2 = \frac{1}{R_1 R_2 C_1 C_2}$$

2 denklem

R_1, R_2'ye değer ver, C_2'yi bul. Sonra C_1'i bul.

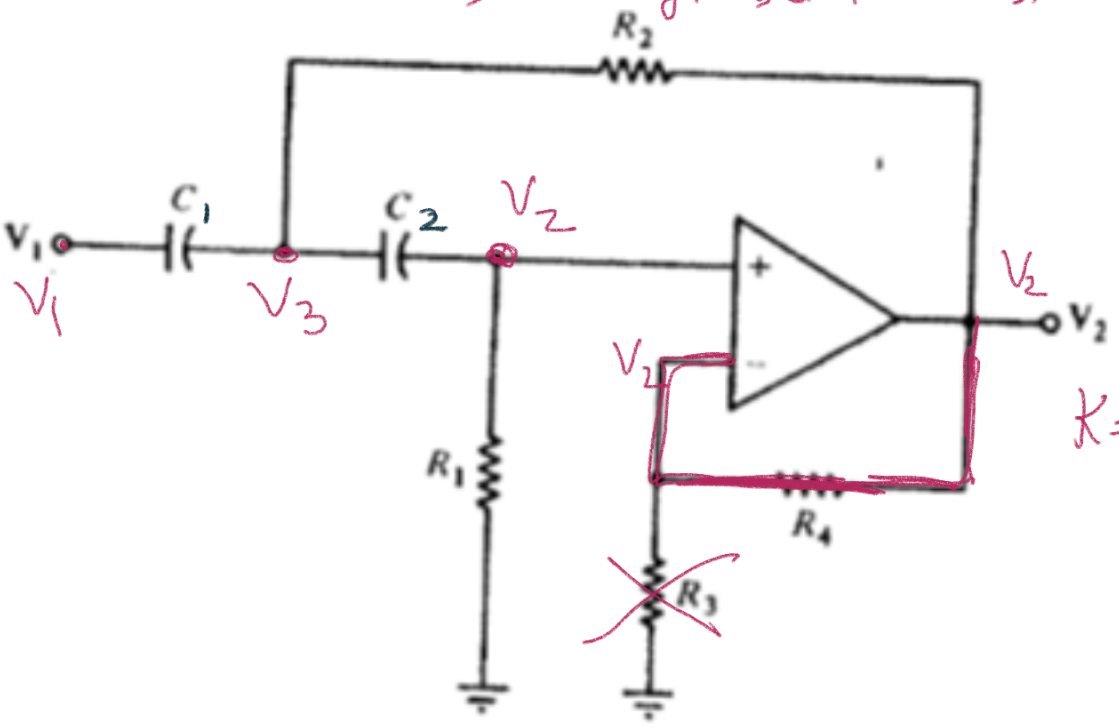

$K=1$ olsun

FIGURE 6.4 Second-order VCVS high-pass filter circuit.

(1) $$(V_1 - V_3)\,j\omega C_1 = (V_3 - V_2)\,j\omega C_2 + \frac{V_3 - V_2}{R_2}$$

(2) $$(V_3 - V_2)\,j\omega C_2 = \frac{V_2}{R_1}$$

(2) $$V_3\,j\omega C_2 = V_2\left(j\omega C_2 + \frac{1}{R_1}\right)$$

$$\boxed{V_3 = V_2\left(1 + \frac{1}{j\omega R_1 C_2}\right)}$$

(1) $V_1 j\omega C_1 = V_3\left(j\omega(C_1+C_2) + \frac{1}{R_2}\right) - V_2\left(j\omega C_2 + \frac{1}{R_2}\right)$

$$V_1 j\omega C_1 = V_2\left[\left(1+\frac{1}{j\omega R_1 C_2}\right)\left(j\omega(C_1+C_2)+\frac{1}{R_2}\right) - j\omega C_2 - \frac{1}{R_2}\right]$$

$$V_1 j\omega C_1 = V_2\left[j\omega C_1 + \cancel{j\omega C_2} + \cancel{\frac{1}{R_2}} + \frac{C_1+C_2}{R_1 C_2} + \frac{1}{j\omega R_1 R_2 C_2} \cancel{- j\omega C_2} - \cancel{\frac{1}{R_2}}\right]$$

$$V_1 = V_2\left[1 + \frac{C_1+C_2}{j\omega C_1 C_2 R_1} + \frac{1}{-\omega^2 R_1 R_2 C_1 C_2}\right]$$

$$V_1 = V_2\left[\frac{-\omega^2 R_1 R_2 C_1 C_2 + j\omega R_2 (C_1+C_2) + 1}{-\omega^2 R_1 R_2 C_1 C_2}\right]$$

$$\frac{V_2}{V_1} = H(j\omega) = \frac{-\omega^2 R_1 R_2 C_1 C_2}{-\omega^2 R_1 R_2 C_1 C_2 + j\omega R_2 (C_1+C_2) + 1}$$

$$H(j\omega) = \frac{-\omega^2}{-\omega^2 + j\omega \frac{1}{R_1}\frac{C_1+C_2}{C_1 C_2} + \frac{1}{R_1 R_2 C_1 C_2}}$$

Genel Form: $$\frac{Ks^2}{s^2 + \frac{a}{b} w_c s + \frac{w_c^2}{b}}$$

Butterworth: $b = 1$

(2) $$w_c = \sqrt{\frac{1}{R_1 R_2 C_1 C_2}}$$ Kesim fr.

(1) $$a w_c = \frac{1}{R_1} \frac{C_1 + C_2}{C_1 C_2}$$

C_1, C_2'ye değer ver. R_1'i bul. Sonra R_2'yi bul.

Kazanç için

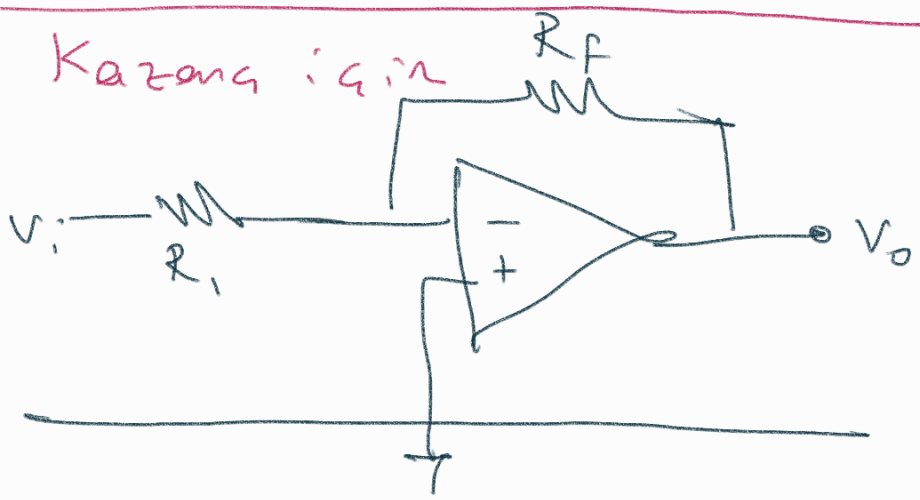

YÜKSEK DERECE FİLTRELER:

Butterworth: $$|H(j\omega)| = \frac{A_{LP}}{\sqrt{1 + \left(\omega / \omega_c\right)^{2n}}}$$

derece $\leftarrow n = 1, 2, 3, \ldots$

n. arttıkça filtre ideale yaklaşır.

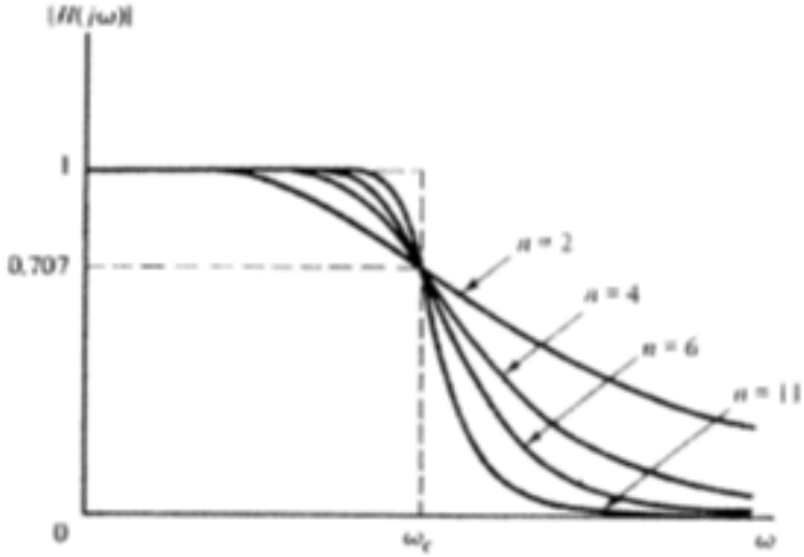

FIGURE 5.5 Low-pass Butterworth magnitudes.

LPF, HPF aynı katsayılar.

n	a	b	
1	-	1	
2	1.414214 $\sqrt{2}$	1	
3	1.000000	1	→ 2. derece
	-	1	→ 1. derece
4	0.765367	1	→ 2. derece
	1.847759	1	→ 2. derece
5	-	1	→ 1. derece
	0.618	1	→ 2. derece
	1.618	1	→ 2.
6			
7			
8			

Example: 1'st order LPF

$K = 4$ $\quad f_c = 1000\,Hz$

$$\frac{K\,w_c}{s + b\,w_c}$$

$$w_c = \frac{1}{RC} = 2000\pi$$

$$C = 100\,nF \quad (10^{-7})$$

$$R = \frac{1}{2\pi \times 10^3 \times 10^{-7}} = \frac{10^4}{2\pi}\ \Omega$$

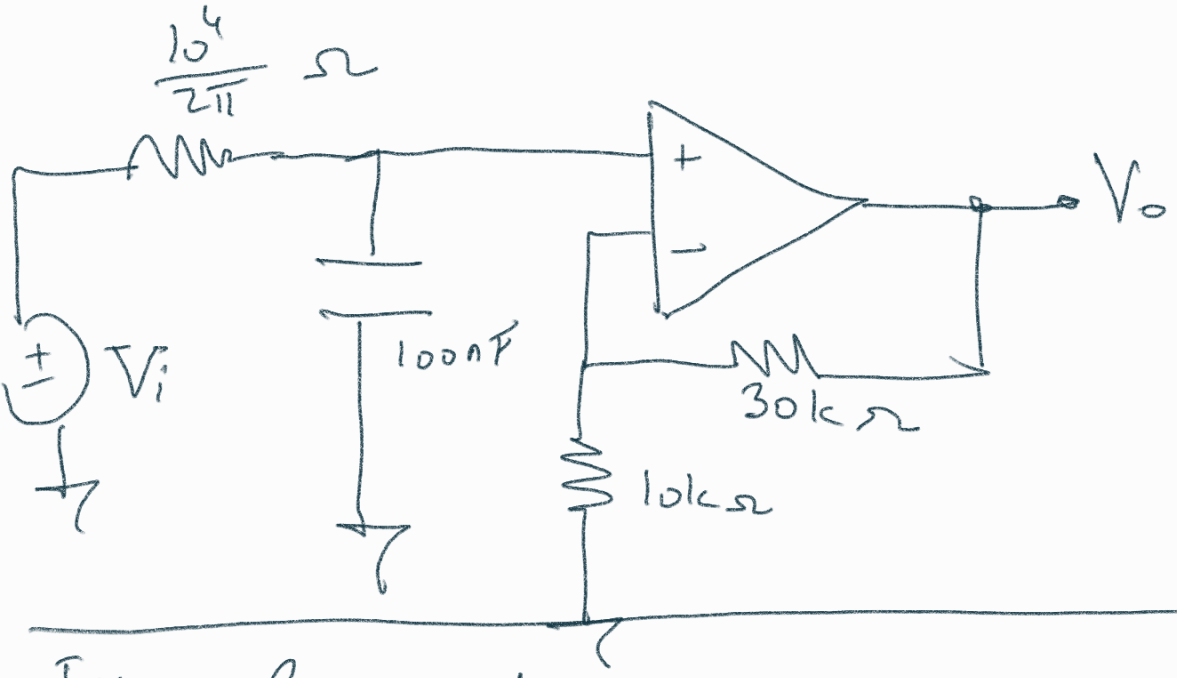

Example: 2nd order Butterworth LPF

$K=1$ $\qquad f_c = 1000\,Hz$

$(a=\sqrt{2} \qquad b=1$: Tablodan$)$

$$H(s) = \frac{\frac{1}{C_1 C_2 R_1 R_2}}{s^2 + s\frac{1}{C_1}\frac{R_1+R_2}{R_1 R_2} + \frac{1}{C_1 C_2 R_1 R_2}}$$

Genel Form: $$\frac{b\,\omega_c^2}{s^2 + a\,\omega_c\, s + b\,\omega_c^2}$$

R_1, R_2, C_1, C_2 tasarlayın

$\omega_c = 2000\pi$

R_1, R_2'ye değer ver. C_1'i bul

$$\sqrt{2}\ 2000\pi = \frac{1}{C_1}\frac{R_1+R_2}{R_1 R_2}$$

$R_1 = R_2 = 10^4\ \Omega$

$$C_1 = \frac{1}{2000\sqrt{2}\pi} \times \frac{2\times10^4}{10^8}$$

$$C_1 = \frac{1}{\sqrt{2}\pi}10^{-7} = \frac{100}{\sqrt{2}\pi}\ nF$$

$$4\times10^6\pi^2 = \frac{1}{C_1C_2R_1R_2}$$

$$4\times10^6\pi^2 = \frac{1}{C_2\frac{10^{-7}}{\sqrt{2}\pi}10^8}$$

$$4\times10^6\pi^2 = \frac{\sqrt{2}\pi}{10C_2} \Rightarrow C_2 = \frac{\sqrt{2}\cancel{\pi}}{4\times10^7\pi^{\cancel{2}}}$$

$$= \frac{100}{2\sqrt{2}\pi}\ nF$$

CHAPTER 15: LAPLACE DÖNÜŞÜMÜ:

TABLE 15.1

Properties of the Laplace transform.

Property	$f(t)$	$F(s)$
Linearity	$a_1f_1(t) + a_2f_2(t)$	$a_1F_1(s) + a_2F_2(s)$
Scaling	$f(at)$	$\frac{1}{a}F\left(\frac{s}{a}\right)$
Time shift	$f(t-a)u(t-a)$	$e^{-as}F(s)$
Frequency shift	$e^{-at}f(t)$	$F(s+a)$
Time differentiation	$\frac{df}{dt}$	$sF(s) - f(0^-)$
	$\frac{d^2f}{dt^2}$	$s^2F(s) - sf(0^-) - f'(0^-)$
	$\frac{d^3f}{dt^3}$	$s^3F(s) - s^2f(0^-) - sf'(0^-) - f''(0^-)$
	$\frac{d^nf}{dt^n}$	$s^nF(s) - s^{n-1}f(0^-) - s^{n-2}f'(0^-) - \cdots - f^{(n-1)}(0^-)$
Time integration	$\int_0^t f(x)dx$	$\frac{1}{s}F(s)$
Frequency differentiation	$tf(t)$	$-\frac{d}{ds}F(s)$
Frequency integration	$\frac{f(t)}{t}$	$\int_s^\infty F(s)ds$
Time periodicity	$f(t) = f(t+nT)$	$\frac{F_1(s)}{1-e^{-sT}}$
Initial value	$f(0)$	$\lim_{s\to\infty} sF(s)$
Final value	$f(\infty)$	$\lim_{s\to 0} sF(s)$
Convolution	$f_1(t) * f_2(t)$	$F_1(s)F_2(s)$

TABLE 15.2

Laplace transform pairs.*

$f(t)$	$F(s)$
$\delta(t)$	1
$u(t)$	$\frac{1}{s}$
e^{-at}	$\frac{1}{s+a}$
t	$\frac{1}{s^2}$
t^n	$\frac{n!}{s^{n+1}}$
te^{-at}	$\frac{1}{(s+a)^2}$
t^ne^{-at}	$\frac{n!}{(s+a)^{n+1}}$
$\sin \omega t$	$\frac{\omega}{s^2+\omega^2}$
$\cos \omega t$	$\frac{s}{s^2+\omega^2}$
$\sin(\omega t + \theta)$	$\frac{s\sin\theta + \omega\cos\theta}{s^2+\omega^2}$
$\cos(\omega t + \theta)$	$\frac{s\cos\theta - \omega\sin\theta}{s^2+\omega^2}$
$e^{-at}\sin \omega t$	$\frac{\omega}{(s+a)^2+\omega^2}$
$e^{-at}\cos \omega t$	$\frac{s+a}{(s+a)^2+\omega^2}$

*Defined for $t \geq 0$; $f(t) = 0$, for $t < 0$.

15.5 Find the Laplace transform of each of the following functions:

(a) $t^2\cos(2t + 30°)u(t)$

(b) $3t^4e^{-2t}\,u(t)$

(c) $2tu(t) - 4\frac{d}{dt}\delta(t)$

(d) $2e^{-(t-1)}\,u(t)$

(e) $5u(t/2)$

(f) $6e^{-t/3}\,u(t)$

(g) $\frac{d^n}{dt^n}\delta(t)$

a) $\cos(2t) = \frac{s}{s^2+4}$

$\sin(2t) = \frac{2}{s^2+4}$

$\cos(2t+30) = \cos(2t)\cos(30°) - \sin(2t)\sin(30°)$

$\downarrow \mathcal{L}$

$\frac{s\cos(30°)}{s^2+4} - \frac{2\sin(30°)}{s^2+4}$

$t^2 \xrightarrow{\mathcal{L}} \frac{d^2}{ds^2}$

$F(s) = \frac{d^2}{ds^2}\left\{\frac{s\cos(30°) - 2\sin 30°}{s^2+4}\right\}$

b) $3t^4 e^{-2t} u(t)$

$$\underbrace{\underbrace{\underbrace{\underbrace{u(t)}_{1/s}}_{\frac{1}{s+2}}}_{\frac{d^4}{ds^4}\left\{\frac{1}{s+2}\right\}}}_{3\frac{d^4}{ds^4}\left\{\frac{1}{s+2}\right\}}$$

$$= \frac{3\times 24}{(s+2)^5}$$

① $\frac{-1}{(s+2)^2}$

② $\frac{2}{(s+2)^3}$

③ $\frac{-6}{(s+2)^4}$

④ $\frac{24}{(s+2)^5}$

c) $2t\underbrace{u(t)}_{\frac{1}{s}} - 4\underbrace{\frac{d}{dt}\underbrace{\delta(t)}_{1}}_{s}$

$$\underbrace{\underbrace{(-)(-)\frac{1}{s}}_{\frac{1}{s^2}}}_{+2/s^2} \qquad \underbrace{-4s}_{-4s}$$

$$\frac{d}{dt} \rightarrow s\underbrace{F(s)}_{1} - \underbrace{f(0^-)}_{\emptyset}$$

$$\boxed{F(s) = \frac{2}{s^2} - 4s}$$

d) $2e^{-(t-1)} u(t)$

$$2e\ \underbrace{\underbrace{e^{-t}\underbrace{u(t)}_{\frac{1}{s}}}_{\frac{1}{s+1}}}_{\frac{2e}{s+1}}$$

$$F(s) = \frac{2e}{s+1}$$

e) $5\,u\left(\frac{t}{2}\right)$

$$f(at) \xrightarrow{\mathcal{L}} \frac{1}{a}F\left(\frac{s}{a}\right)$$

$a = \frac{1}{2}$

$u(t) \longrightarrow \frac{1}{s}$

$u\left(\frac{t}{2}\right) \longrightarrow \cancel{2}\,\frac{1}{\cancel{2}s} = \frac{1}{s}$

f) $6e^{-t/3}\underbrace{u(t)}_{1/s}$

$\|$

$6e^{-t/3}u(t/3)$

$$e^{-t}u(t) \xrightarrow{\mathcal{L}} \frac{1}{s+1}$$

$$e^{-t/3}u(t/3) \xrightarrow{\mathcal{L}} 3\,\frac{1}{3s+1}$$

$$6e^{-t/3}u(t/3) \xrightarrow{\mathcal{L}} 18\,\frac{1}{3s+1}$$

g) $\dfrac{d^n \underbrace{\delta(t)}_{1}}{dt^n}$

$\downarrow$

s^n

$sF(s) - \cancel{f(0^-)}$

$s(sF(s) - \cancel{f(0^-)}) - \cancel{f'(0^-)}$

$s(s(sF(s) - \cancel{f(0^-)}) - \cancel{f'(0^-)}) - \cancel{f''(0^-)}$

$\vdots$

15.10 In two different ways, find the Laplace transform of

$$g(t) = \frac{d}{dt}(te^{-t}\underbrace{\cos t}_{\frac{s}{s^2+1}})$$

$$e^{-t}\cos t \xrightarrow{\mathcal{L}} \frac{s+1}{(s+1)^2+1} = \frac{s+1}{s^2+2s+2}$$

$$te^{-t}\cos t \xrightarrow{\mathcal{L}} -\frac{d}{ds}\left\{\frac{s+1}{(s+1)^2+1}\right\} = -\frac{s^2+2s+2-(2s+2)(s+1)}{(s^2+2s+2)^2}$$

$$\frac{d}{dt}(te^{-t}\cos t) \longrightarrow s\left[\frac{-d}{ds}\left\{\frac{s+1}{(s+1)^2+1}\right\}\right] - \underbrace{\cancel{te^{-t}\cos t\big|_{t=0}}}_{0}$$

$$= -s\left[\frac{s^2+\cancel{2s}+\cancel{2}-2s^2-\cancel{2s}-2s-\cancel{2}}{(s^2+2s+2)^2}\right]$$

$$= \frac{-s(-s^2-2s)}{(s^2+2s+2)^2} = \frac{s^2(s+2)}{(s^2+2s+2)^2}$$

$$\frac{d}{dt}(te^{-t}\cos t) = e^{-t}\cos t + t(-e^{-t}\cos t - e^{-t}\sin(t))$$

$$= \underbrace{e^{-t}\cos t}_{\frac{s+1}{(s+1)^2+1}} - \underbrace{te^{-t}\cos(t)}_{\frac{-d}{ds}\left\{\frac{s+1}{s^2+2s+2}\right\}} - \underbrace{te^{-t}\sin(t)}_{\frac{-d}{ds}\left\{\frac{1}{s^2+2s+2}\right\}}$$

$$= \frac{s+1}{s^2+2s+2} + \frac{s^2+2s+2-(s+1)(2s+2)}{(s^2+2s+2)^2} - \frac{2s+2}{(s^2+2s+2)^2}$$

$$= \frac{s+1}{s^2+2s+2} + \frac{s^2+\cancel{2s}+\cancel{2}-2s^2-\cancel{2s}-2s-\cancel{2}}{(s^2+2s+2)^2} - \frac{2s+2}{(s^2+2s+2)^2}$$

$$= \frac{s+1}{s^2+2s+2} - \frac{s^2+2s+2s+2}{(s^2+2s+2)^2}$$

$$= \frac{s^3+2s^2+\cancel{2s}+\cancel{s^2}+\cancel{2s}+\cancel{2}-\cancel{s^2}-\cancel{2s}-\cancel{2s}-\cancel{2}}{(s^2+2s+2)^2}$$

$$= \frac{s^2(s+2)}{(s^2+2s+2)^2}$$

15.14 Find the Laplace transform of the signal in Fig. 15.26.

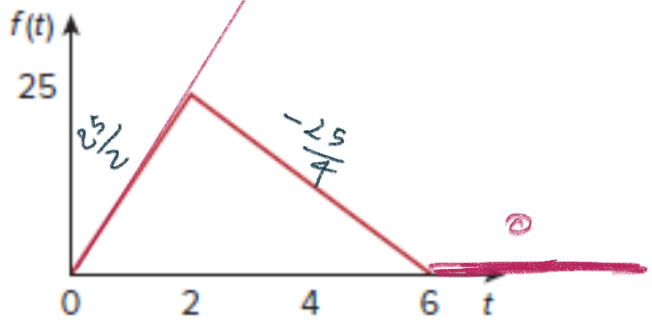

Figure 15.26
For Prob. 15.14.

$$f(t) = \frac{25}{2}\, t\, \underbrace{u(t)}_{1/s} - \frac{75}{4}(t-2)\,u(t-2) + \frac{25}{4}(t-6)\,u(t-6)$$

$$= \frac{25}{2}\frac{1}{s^2} - \frac{75}{4}e^{-2s}\frac{1}{s^2} + \frac{25}{4}e^{-6s}\frac{1}{s^2}$$

15.19 Calculate the Laplace transform of the infinite train of unit impulses in Fig. 15.31.

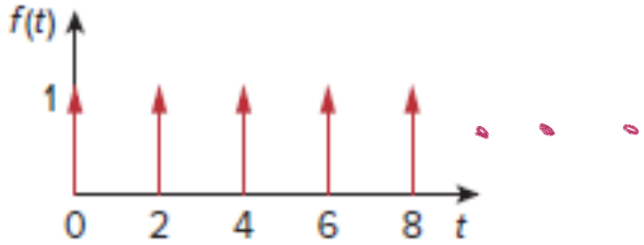

Figure 15.31
For Prob. 15.19.

$$f(t) = \sum_{i=0}^{\infty} \delta(t-2i) \xrightarrow{\mathcal{L}} \sum_{i=0}^{\infty} e^{-2is} \cdot 1$$

$$F(s) = \sum_{i=0}^{\infty} \left(e^{-2s}\right)^i$$

$$F(s) = \frac{1}{1-e^{-2s}}$$

15.26 Determine the initial and final values of $f(t)$, if they exist, given that:

(a) $F(s) = \dfrac{5s^2+3}{s^3+4s^2+6}$

(b) $F(s) = \dfrac{s^2-2s+1}{4(s-2)(s^2+2s+4)}$

$$\boxed{\begin{aligned} \lim_{t\to 0} f(t) &= \lim_{s\to\infty} sF(s) \\ \lim_{t\to\infty} f(t) &= \lim_{s\to 0} sF(s) \end{aligned}}$$

Not: Bunu uygulayabilmek için bu limit var olmalıdır.

a) $F(s)$'nin sağ yarı düzlemde kutbu varsa limit yoktur. Ayrıca 0'da 1'den fazla kutbu varsa, yine limit yoktur.

$$\frac{1}{s-2} \xrightarrow{\mathcal{L}^{-1}} e^{2t}u(t) \to \infty \quad \text{limit yok}$$

$$\frac{1}{s^2} \xrightarrow{\mathcal{L}^{-1}} t\,u(t) \to \infty \quad \text{limit yok.}$$

$$\frac{1}{s-\underline{\underline{2}}-j} + \frac{1}{s-\underline{\underline{2}}+j} \xrightarrow{\mathcal{L}^{-1}} e^{2t}\cos(t+\theta)$$

$$\frac{s}{s^2+4} \xrightarrow{\mathcal{L}^{-1}} \cos(2t) \quad \text{limit yok.}$$

$$\lim_{s\to\infty} sF(s) = \lim_{s\to\infty} \frac{s(5s^2+3)}{s^3+4s^2+6} = 5 = f(0)$$

$0.16+1.16j$, $0.16-1.16j$, -4.32

Pozitif yarı düzlemde kutbu olduğu için $(\alpha+j\omega, \alpha-j\omega)$ $\alpha>0$ limit yoktur.

b) $$\frac{s^2-2s-1}{4(s-2)(s^2+2s+4)}$$

$\hookrightarrow$ Pozitif kutbu var $\rightarrow$ e^{2t} gelir

$f(\infty)$ bulunamaz.

$$\boxed{\lim_{s\to\infty} sF(s) = \lim_{s\to\infty} \frac{s(s^2-2s-1)}{4(s-2)(s^2+2s+4)} = \frac{1}{4} = f(0)}$$

BAŞLANGIÇ

kutuplar, 2, $-1\mp\sqrt{3}j$

$\downarrow$

e^{2t} limit yoktur.

son değer teoremi kullanılamaz.

yani $\lim_{s\to 0} sF(s)$ kullanılamaz

15.32 Determine the inverse Laplace transform of each of the following functions:

Kısmi kesir açılımı.

$$\frac{K_1^?}{s} + \frac{K_2^?}{s+2} + \frac{K_3^?}{s+4}$$

(a) $\dfrac{8(s+1)(s+3)}{s(s+2)\cancel{(s+4)}}$

(b) $\dfrac{s^2-2s+4}{(s+1)(s+2)^2}$

(c) $\dfrac{s^2+1}{(s+3)(s^2+4s+5)}$

a) $K_1 = sF(s)\Big|_{s=0} = \dfrac{8\times1\times3}{2\times4} = 3$

$K_2 = (s+2)F(s)\Big|_{s=-2} = \dfrac{8(-1)(1)}{(-2)(2)} = 2$

$K_3 = (s+4)F(s)\Big|_{s=-4} = \dfrac{8(-3)(-1)}{(-4)(-2)} = 3$

$$f(t) = \left(3 + 2e^{-2t} + 3e^{-4t}\right)u(t)$$

b) $$\frac{s^2-2s+4}{(s+1)(s+2)^2} = \frac{K_1}{s+1} + \frac{K_2}{(s+2)^2} + \frac{K_3}{s+2}$$

$$K_1 = (s+1)F(s)\Big|_{s=-1} = \frac{1+2+4}{1} = 7$$

$$K_2 = (s+2)^2 F(s)\Big|_{s=-2} = \frac{4+4+4}{(-1)} = -12$$

$$K_3 = \frac{d}{ds}\left\{(s+2)^2 F(s)\right\}\Big|_{s=-2} = \frac{d}{ds}\left\{\frac{s^2-2s+4}{s+1}\right\}\Big|_{s=-2}$$

$$= \frac{(2s-2)(s+1)-(s^2-2s+4)}{(s+1)^2}\Bigg|_{s=-2}$$

$$= \frac{(-6)(-1)-(4+4+4)}{(-1)^2} = -6$$

$$F(s) = \frac{7}{s+1} - \frac{12}{(s+2)^2} - \frac{6}{(s+2)}$$

$$\downarrow \mathcal{L}^{-1}$$

$$f(t) = \left(7e^{-t} - 12te^{-2t} - 6e^{-2t}\right)u(t)$$

$f(0) = 1$

$f(\infty) = 0$

c) $$\frac{s^2+1}{(s+3)(s^2+4s+5)} = \frac{K_1}{s+3} + \underbrace{\frac{K_2}{s+2-j} + \frac{K_2^*}{s+2+j}}_{\downarrow \mathcal{L}^{-1}}$$

$K_1 \to 5$, $K_2 \to 2\angle -180^\circ$

$$s_{1,2} = \frac{-4 \mp \sqrt{16-20}}{2} = -2 \mp j$$

$$2|K_2|e^{-2t}\cos(t+\theta_K)$$

$$K_1 = (s+3)F(s)\Big|_{s=-3} = \frac{9+1}{9-12+5} = 5$$

$$K_2 = (s+2-j)F(s)\Big|_{s=-2+j} = \frac{(-2+j)^2+1}{(-2+j+3)(2j)}$$

$$= \frac{4-4j\cancel{-1}\cancel{+1}}{(1+j)(2j)} = \frac{4\sqrt{2}\angle -45^\circ}{\sqrt{2}\angle 45 \; 2\angle 90^\circ}$$

$$K_2 = 2\angle -180^\circ = -2$$

$$f(t) = 5e^{-3t} + 2\times 2e^{-2t}\cos(t-180^\circ)$$

$$= 5e^{-3t} - 4e^{-2t}\cos(t)$$

Alternatif

$$F(s) = \frac{K_1}{s+3} + \frac{K_2 s + K_3}{s^2+4s+5}$$

$K_1 \to 5$

payda eşitlenerek K_2 ve K_3 bulunur.

$-(4s+8)$

$$= \frac{5}{s+3} - \frac{4s+8}{s^2+4s+5}$$

$$= \frac{5}{s+3} - \frac{4(s+2)}{(s+2)^2+1}$$

$$F(s) = 5e^{-3t} - 4e^{-2t}\cos(t)$$

15.40 Show that

$$\mathcal{L}^{-1}\left[\frac{4s^2+7s+13}{(s+2)(s^2+2s+5)}\right] =$$

$$\longrightarrow \left[\sqrt{2}e^{-t}\cos(2t+45^\circ) + 3e^{-2t}\right]u(t)$$

$$\frac{4s^2+7s+13}{(s+2)(s^2+2s+5)} = \frac{K_1}{s+2} + \frac{K_2}{s+1-2j} + \frac{K_2^*}{s+1+2j}$$

$K_1 \to 3$, $K_2 \to \frac{1}{\sqrt{2}}\angle 45^\circ$, $K_2^* \to \frac{1}{\sqrt{2}}\angle -45^\circ$

① ②

$$\frac{-2 \mp \sqrt{-16}}{2}$$

$$K_1 = (s+2)F(s)\Big|_{s=-2} = \frac{16-14+13}{4-4+5} = \frac{15}{5} = 3$$

$$K_2 = (s+1-2j)F(s)\Big|_{s=-1+2j} = \frac{4(-1+2j)^2 + 7(-1+2j) + 13}{(-1+2j+2)(\cancel{-1}+2j\cancel{+1}+2j)}$$

$$= \frac{4-16j-16-7+14j+13}{(1+2j)(4j)}$$

$$= \frac{-6-2j}{(1+2j)(4j)} \begin{matrix} -j \\ -j \end{matrix} = \frac{-2+6j}{4(1+2j)} \frac{(1-2j)}{(1-2j)} = \frac{-2+4j+6j+12}{20}$$

$$= \frac{10+10j}{20} = \frac{1+j}{2}$$

$$K_2 = \frac{1}{\sqrt{2}} \angle 45^\circ$$

$$f(t) = \left[3e^{-2t} + \sqrt{2}\, e^{-t} \cos(2t+45^\circ)\right] u(t)$$

(c) $Z(s) = \dfrac{5}{s(s+1)(s^2+6s+10)}$

***15.41** Let $x(t)$ and $y(t)$ be as shown in Fig. 15.36. Find $z(t) = x(t) * y(t)$. Convolution

15.42 Design a problem to help other students better understand how to convolve two functions together.

Eurisim

$x(-t)$

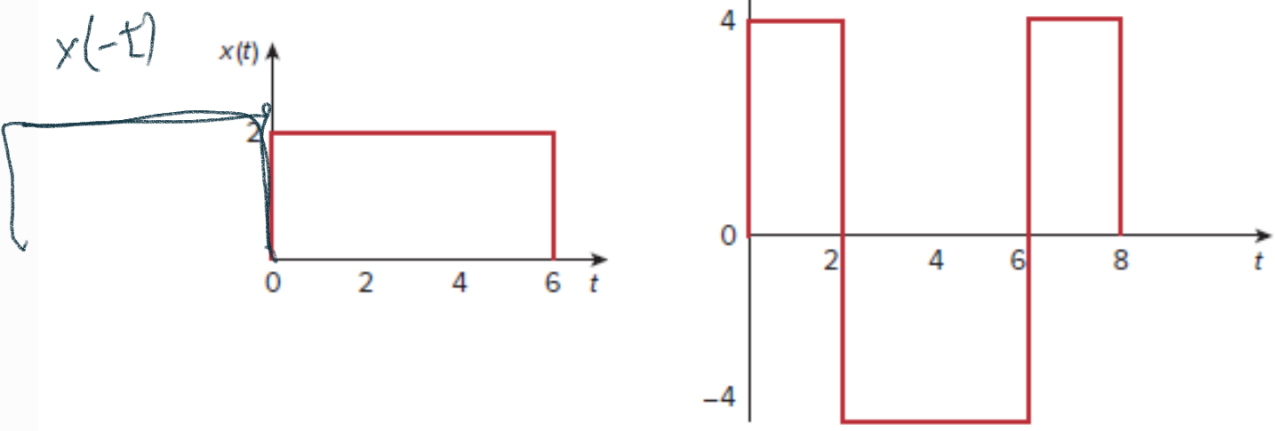

Figure 15.36
For Prob. 15.41.

$$x(t) * y(t) = \int_{-\infty}^{\infty} x(\tau)\, y(t-\tau)\, d\tau$$

$$= \int_{-\infty}^{\infty} y(\tau)\, x(t-\tau)\, d\tau \quad (*)$$

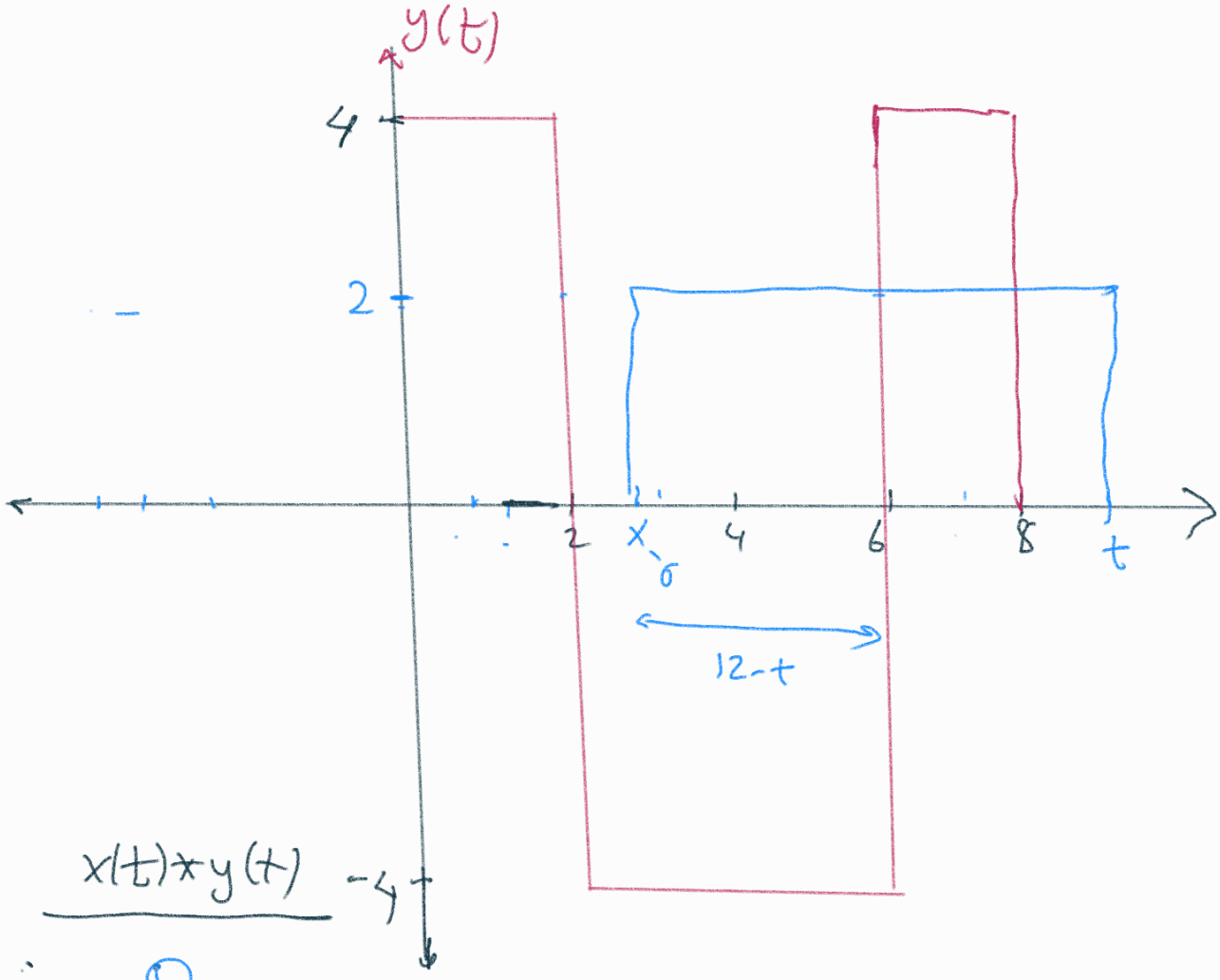

$x(t)*y(t)$	
$t<0$:	0
$0<t<2$:	$8t$
$2<t<6$:	$32-8t$
$6<t<8$:	-16
$8<t<12$:	$8t-80$
$12<t<14$:	$112-8t$
$14<t$:	0

+ örtüşme süresi

$2 - \cancel{t} + \cancel{6} + \cancel{t} - \cancel{6} = 2$

int: $2 \times 8 - 32$

$16 - 8(12-t)$

$8t - 80$

$\longrightarrow$ örtüşme $t-6 \rightarrow 8$ oran

$14-t$ süre boyunca

int: $8 \times (14-t)$

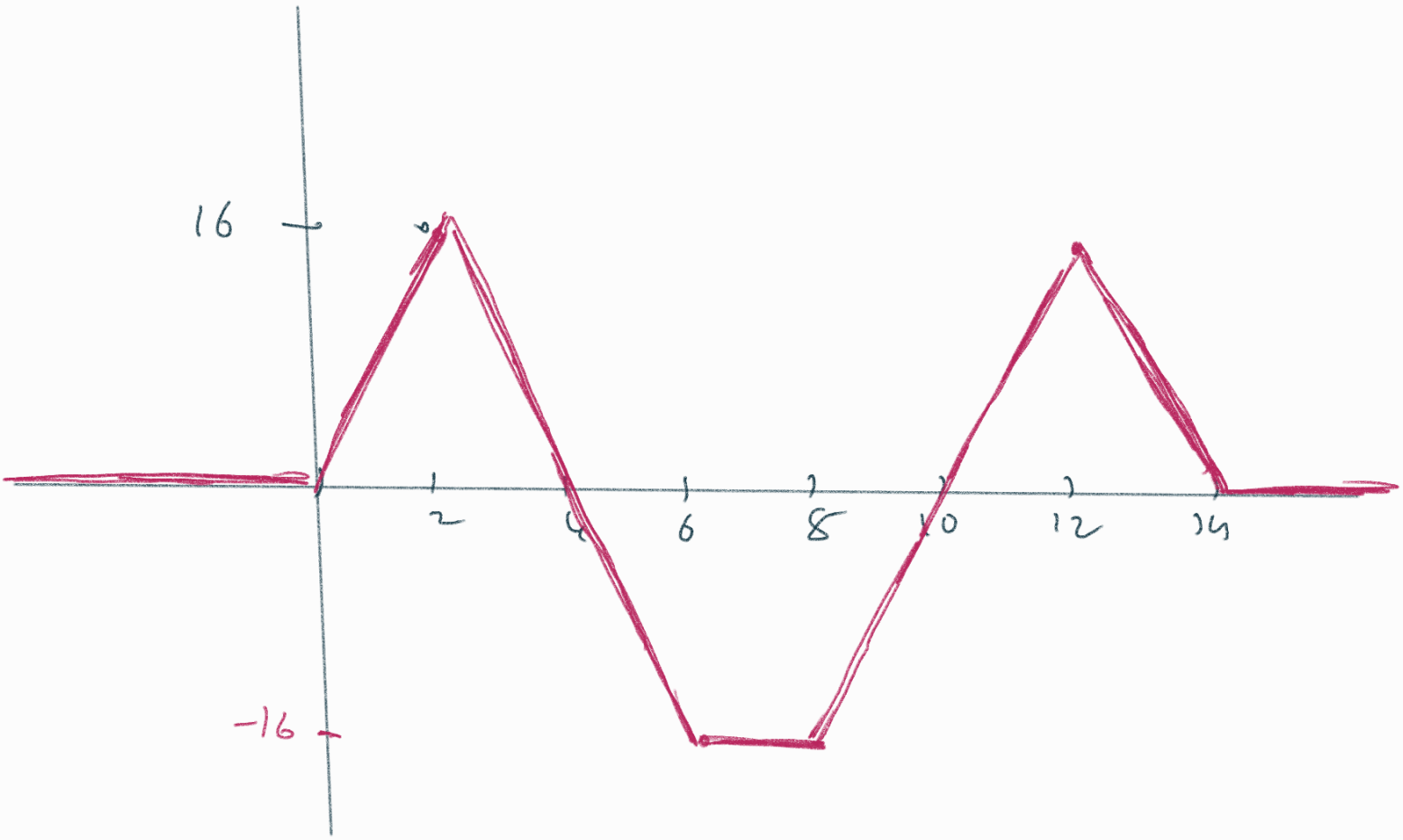

***15.49** Use the convolution integral to find:

(a) $t * e^{at}u(t)$ $\quad tu(t) * e^{at}u(t)$

(b) $\cos(t) * \cos(t)u(t)$

a) $= \int_{0\ \cancel{-\infty}}^{t\ \cancel{\infty}} \tau \cancel{u(\tau)}\ e^{a(t-\tau)}\ \cancel{u(t-\tau)}\ d\tau$

$= \int_0^t \tau e^{at} e^{-a\tau}\ d\tau$

$\left[\begin{array}{ll} \tau = u & e^{-a\tau}d\tau = dv \\ d\tau = du & -\frac{1}{a}e^{-a\tau} = v \end{array}\right] \int u\,dv = uv \Big] - \int v\,du$

$$e^{at}\left[\underbrace{-\frac{\tau}{a}e^{-a\tau}\Big|_0^t}-\underbrace{\int_0^t -\frac{1}{a}e^{-a\tau}\,d\tau}\right]$$

$$e^{at}\left[\frac{-te^{-at}}{a}+\frac{-1}{a^2}e^{-a\tau}\Big|_0^t\right]$$

$$=e^{at}\left[\frac{-te^{-at}}{a}+\frac{1}{a^2}-\frac{e^{-at}}{a^2}\right]$$

$$=-\frac{t}{a}+\frac{e^{at}}{a^2}-\frac{1}{a^2}$$

b) $\cos(t)u(t) * \cos t\ u(t)$

$$\int_0^t \cos(\tau)\cos(t-\tau)\,d\tau$$

$$\int_0^t \frac{\cos(t)+\cos(2\tau-t)}{2}\,d\tau$$

$$\frac{\cos(t)}{2}\tau\Big|_0^t+\frac{1}{4}\sin(2\tau-t)\Big|_0^t$$

$$\frac{t\cos(t)}{2}u(t)+\frac{\sin(t)-\sin(-t)}{4}$$

$$=\left[\frac{t\cos(t)}{2}+\frac{\sin(t)}{2}\right]u(t)$$

15.52 Use the Laplace transform to find $i(t)$ for $t > 0$ if

$$\frac{d^2i}{dt^2} + 3\frac{di}{dt} + 2i + \delta(t) = 0,$$

$$i(0) = 0, \qquad i'(0) = 3$$

$$\frac{di}{dt} \xrightarrow{\mathcal{L}} sI - i(0)$$

$$\frac{d^2i}{dt^2} \xrightarrow{\mathcal{L}} s^2 I - s\underbrace{\cancel{i(0)}}_{0} - \underbrace{i'(0)}_{3}$$

$$s^2 I - 3 + 3sI + 2I + 1 = 0$$

$$\frac{2}{s^2+3s+2} = I = \frac{K_1 \to 2}{s+1} + \frac{K_2 \to -2}{s+2}$$

$$i(t) = \left(2e^{-t} - 2e^{-2t}\right)u(t)$$

15.60 Solve the following integrodifferential equation

$$2\frac{dx}{dt} + 5x + 3\int_0^t x\,dt + 4 = \sin 4t, \qquad x(0) = 1$$

$$2sX - 2\underbrace{\cancel{x(0)}}_{1} + 5X + \frac{3X}{s} + \frac{4}{s} = \frac{4}{s^2+16}$$

$$X\left(2s + 5 + \frac{3}{s}\right) = 2 - \frac{4}{s} + \frac{4}{s^2+16}$$

$$X\left(\frac{2s^2+5s+3}{s}\right) = 2 - \frac{4}{s} + \frac{4}{s^2+16}$$

$$(2s^2+5s+3)X = 2s-4+\frac{4s}{s^2+16}$$

$$(s^2+2.5s+1.5)X = s-2+\frac{2s}{s^2+16}$$

$$\sqrt{6.25-6}$$

$$\frac{-2.5 \mp \sqrt{0.25}}{2}$$

$$\frac{-3,\ -2}{2} = (-1,-1.5)$$

$$X = \underbrace{\frac{s-2}{(s+1)(s+1.5)}} + \underbrace{\frac{2s}{(s^2+16)(s+1)(s+1.5)}}$$

$$= \frac{\overset{-6}{K_1}}{s+1} + \frac{\overset{7}{K_2}}{s+1.5} \qquad \frac{\overset{-4}{K_3}}{s+1} + \frac{\overset{6}{K_4}}{s+1.5} + \frac{K_5 s + K_6}{s^2+16}$$

$$K_1 = \frac{-3}{0.5} \qquad K_2 = \frac{-3.5}{-0.5} \qquad \frac{K_3}{s+1} + \frac{K_4}{s+1.5} + \frac{K_5}{s-4j} + \frac{K_5^*}{s+4j}$$

$$K_3 = \frac{-2}{(17)(0.5)} \qquad K_4 = \frac{-3}{18.25(-0.5)}$$

$$K_5 = \frac{\cancel{8j}}{\cancel{8j}(1-4j)(1.5-4j)}$$

$$K_5 = \frac{1}{1.5-4j-6j-16} = \boxed{\frac{1}{-14.5-10j}}$$

$$x(t) = -6e^{-t} + 7e^{-1.5t} - \frac{4}{17}e^{-t} + \frac{6}{18.25}e^{-1.5t} + 2|K_5|\cos(4t+\theta_{K_5})$$

16.10 The step responses of a series *RLC* circuit are

$V_c = 40 - 10e^{-2000t} - 10e^{-4000t}$ V, $t > 0$

$i_L(t) = 3e^{-2000t} + 6e^{-4000t}$ mA, $t > 0$

(a) Find *C*.

(b) Determine what type of damping is exhibited by the circuit. → Aşırı sönümleme

2 farklı $e^{-\alpha t}$ var.

$+ \quad v_c \quad -$

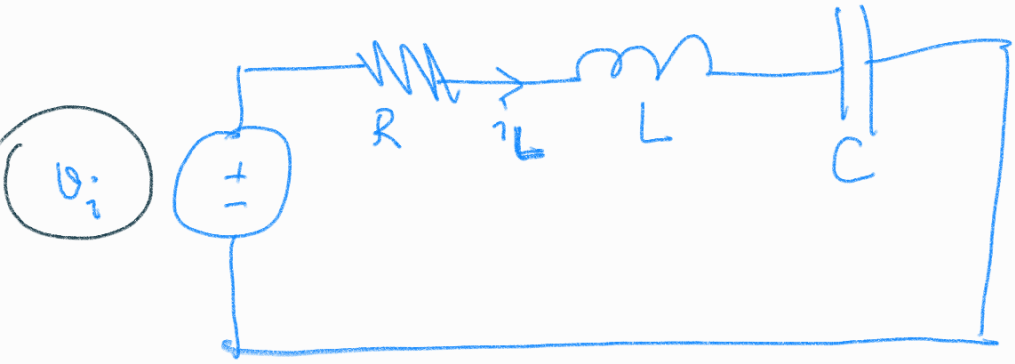

$$C\frac{dv_c}{dt} = i_c = i_L$$

$$C\left(+20000e^{-2000t} + 40000e^{-4000t}\right) = \left(3e^{-2000t} + 6e^{-4000t}\right)\times 10^{-3}$$

$$20000\,C = 3\times10^{-3}$$

$$40000\,C = 6\times10^{-3}$$

$$C = \frac{3\times10^{-3}}{2\times10^{4}} = 1.5\times10^{-7} = 150\,nF$$

$$\boxed{V_i = 40u(t)} = v_R + v_L + v_C$$

$$= i_L R + L\frac{di_L}{dt} + V_C$$

verilmiş

$$\cancel{40} = \left(3Re^{-2000t} + 6Re^{-4000t}\right)10^{-3} - 6Le^{-2000t} - 24Le^{-4000t}$$

$$\cancel{+40} - 10e^{-2000t} - 10e^{-4000t}$$

$$2\times\left[\ 3\times10^{-3}R - 6L - 10 = 0\right]$$

$$6\times10^{-3}R - 24L - 10 = 0$$

$$12L - 10 = 0 \qquad\qquad 15 = 3\times10^{-3}R$$

$$\boxed{L = \frac{10}{12}} \qquad\qquad \boxed{R = 5k\,\Omega}$$

16.19 The switch in Fig. 16.42 moves from position A to position B at $t = 0$ (please note that the switch must connect to point B before it breaks the connection at A, a make before break switch). Find $v(t)$ for $t > 0$.

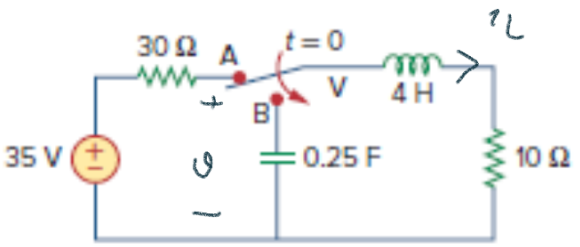

Figure 16.42
For Prob. 16.19.

$t = 0^-$

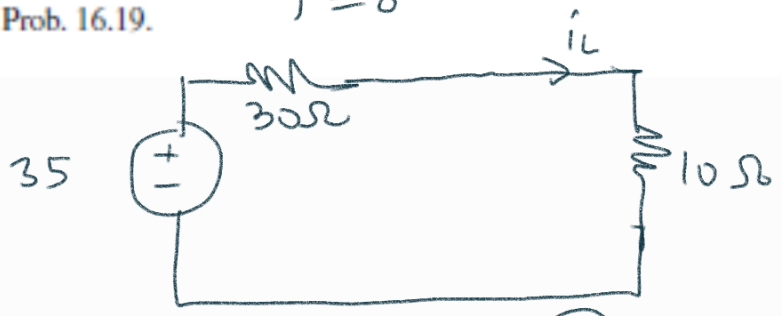

$V(0^-) = 0$ V

$i_L(0^-) = \frac{7}{8}$ A

$t \geq 0$

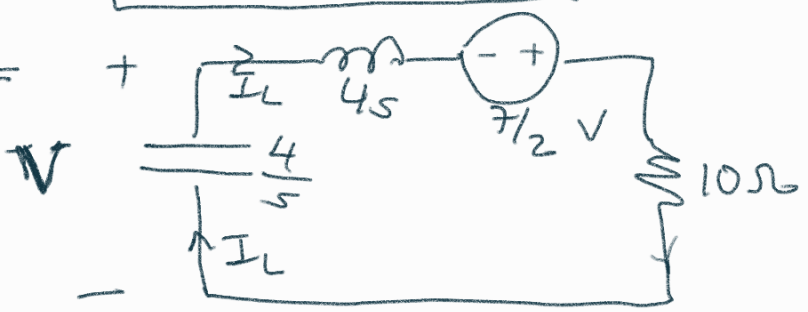

$$v_L = L\frac{di_L}{dt} \xrightarrow{\mathcal{L}} V_L = \underbrace{sL\,I_L}_{} - \underbrace{L\,i_L(0^-)}_{4\times 7/8}$$

$$I_L\left(\frac{4}{s} + 4s + 10\right) = \frac{7}{2}$$

$$I_L\left(\frac{4s^2 + 10s + 4}{s}\right) = \frac{7}{2}$$

$$I_L = \frac{7s}{2(4s^2+10s+4)} = \frac{7s}{8\left(\underbrace{s^2+\frac{5}{2}s+1}\right)}$$

$$s_{1,2} = \frac{-\frac{5}{2} \mp \sqrt{\frac{25}{4}-4}}{2}$$

$$= \frac{-\frac{5}{2} \mp \sqrt{\frac{9}{4}}}{2}$$

$$= \frac{-2.5 \mp 1.5}{2}$$

$$s_{1,2} = (-2, -0.5)$$

$$V = -I_L \frac{4}{s}$$

$$= \frac{-7}{2\left(s^2+\frac{5}{2}s+1\right)}$$

$$= \frac{-7}{2(s+2)(s+0.5)}$$

$$= \frac{K_1}{s+2} + \frac{K_2}{s+0.5}$$

$$K_1 = \frac{-7}{2(-1.5)} = \frac{7}{3}$$

$$K_2 = \frac{-7}{2(1.5)} = -7/3$$

$$v(t) = \left(\frac{7}{3}e^{-2t} - \frac{7}{3}e^{-0.5t}\right)u(t)$$

16.23 Obtain $v(t)$ for $t > 0$ in the circuit of Fig. 16.46.

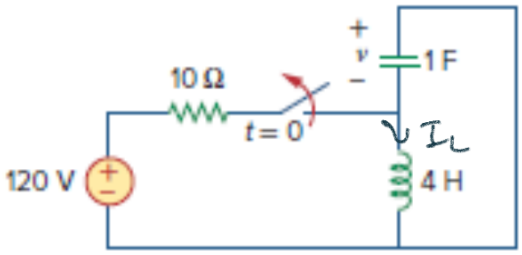

Figure 16.46
For Prob. 16.23.

$t = 0^-$

$i_L(0^-) = 12$ A

$v(0^-) = 0$

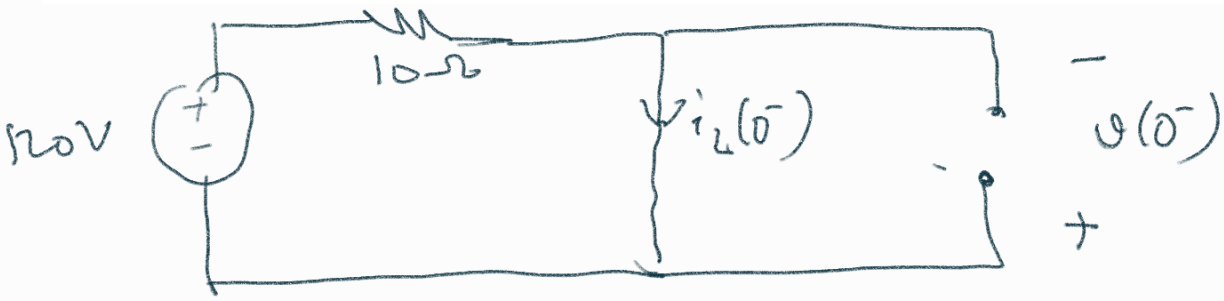

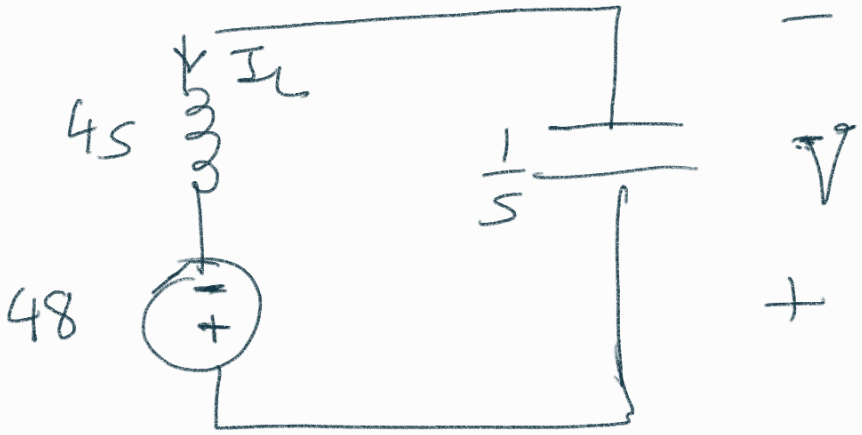

$$v_L = L\frac{di_L}{dt} \xrightarrow{\mathcal{L}} \underbrace{sL\,I_L}\ \underbrace{-\,L\,i(0^-)}_{-48}$$

$$I_L\left(4s+\frac{1}{s}\right) = 48$$

$$I_L = \frac{48s}{4s^2+1}$$

$$V = \frac{1}{s}I_L = \frac{48}{4s^2+1} = \frac{12}{s^2+\frac{1}{4}} = 24\cdot\frac{\frac{1}{2}}{s^2+\left(\frac{1}{2}\right)^2}$$

$$\Big\downarrow \mathcal{L}^{-1}$$

$$v(t) = 24\sin\left(\frac{1}{2}t\right)$$

$$= 24\cos\left(\frac{1}{2}t - 90^\circ\right)$$

16.25 Calculate $v(t)$ for $t > 0$ in the circuit of Fig. 16.48.

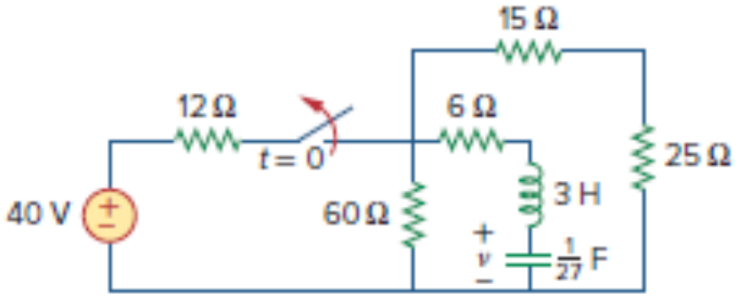

Figure 16.48
For Prob. 16.25.

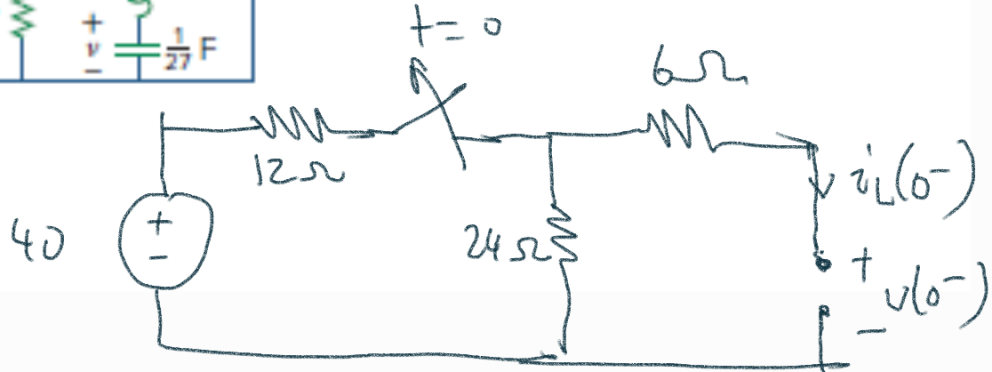

$$\boxed{\begin{aligned} i_L(0^-) &= 0\ A \\ v(0^-) &= 40 \times \frac{24}{36} = \frac{80}{3} \end{aligned}}$$

$$i_c = C\frac{dv_c}{dt}$$

$\underline{\underline{t \geq 0}}$

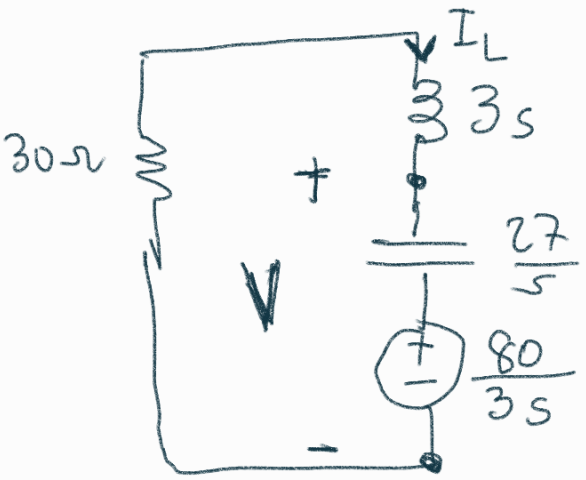

$$\mathcal{L}$$

$$\boxed{\begin{aligned} I_c &= sC\,V_c - C v_c(0^-) \\ V_c &= \frac{I_c + C v_c(0^-)}{sC} \\ V_c &= \frac{I_s}{sC} + \frac{v_c(0^-)}{s} \end{aligned}}$$

$$I_L\left(30 + 3s + \frac{27}{s}\right) + \frac{80}{3s} = 0$$

$$I_L\left(\frac{3s^2 + 30s + 27}{\cancel{s}}\right) = -\frac{80}{3\cancel{s}}$$

$$I_L = \frac{-80}{9(s^2 + 10s + 9)}$$

$$V = \frac{27}{s} I_L + \frac{80}{3s}$$

$$= \frac{-240}{\underbrace{s(s^2 + 10s + 9)}} + \frac{80}{3s}$$

$$= \cancel{\frac{K_1}{s}} + \frac{K_2}{s+1} + \frac{K_3}{s+9} + \cancel{\frac{80/3}{s}}$$

$-\frac{80}{3}$

$K_1 = -240/9 = -80/3$ $\quad K_2 = \frac{-240}{(-1)(8)} = 30$ $\quad K_3 = \frac{-240}{(-9)(-8)} = -10/3$

$$v(t) = \left(30e^{-t} - \frac{10}{3}e^{-9t}\right)u(t)$$

16.28 For the circuit in Fig. 16.51, find $v(t)$ for $t > 0$.

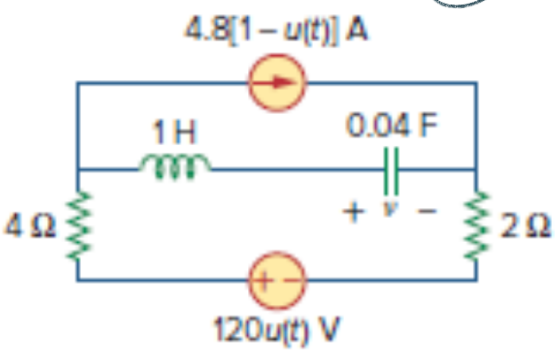

Figure 16.51
For Prob. 16.28.

$t = 0^-$

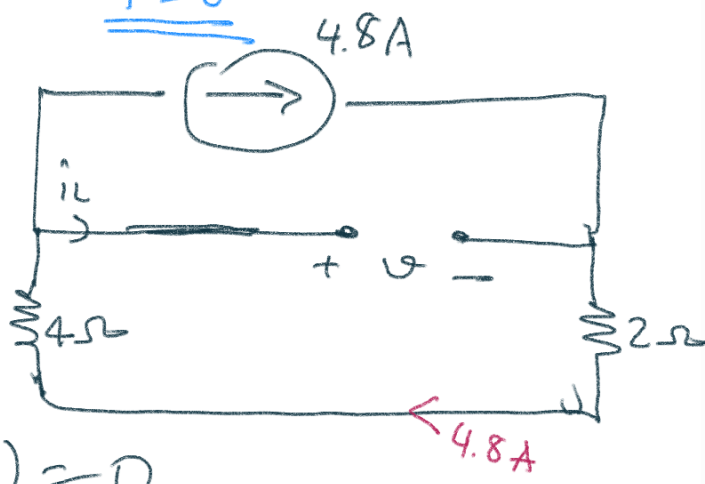

$$i_L(0^-) = 0$$

$$V(0^-) = -6 \times 4.8 = -28.8\ V$$

$t \geq 0$

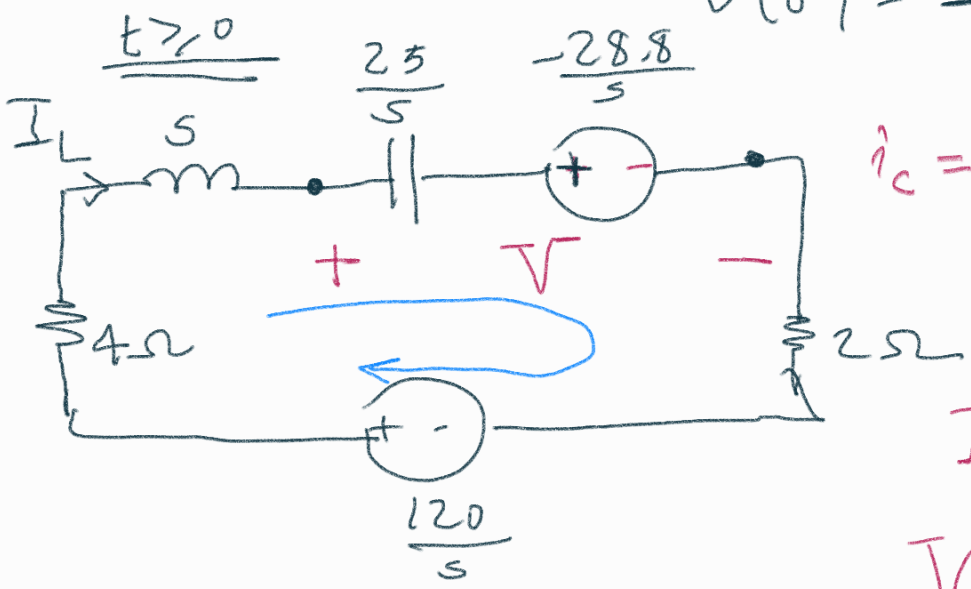

$$i_c = C\frac{dv_c}{dt}$$

$\mathcal{L}$

$$I_c = sC\,V_c - Cv(0^-)$$

$$V_c = \frac{I_c + Cv(0^-)}{sC}$$

$$V_c = \frac{I_c}{sC} + \frac{v(0^-)}{s}$$

$$I_L\left(s + \frac{25}{s} + 6\right) - \frac{28.8}{s} - \frac{120}{s} = 0$$

$$I_L\left(\frac{s^2 + 6s + 25}{s}\right) = \frac{148.8}{s}$$

$$I_L = \frac{148.8}{s^2 + 6s + 25}$$

$$V = \frac{25}{s} I_c - \frac{28.8}{s}$$

$$= \frac{3720}{s(s^2+6s+25)} - \frac{28.8}{s}$$

$$= \frac{K_1}{s} + \frac{K_2 s + K_3}{s^2+6s+25} - \frac{28.8}{s}$$

$$K_1 = \frac{3720}{25} = 148.8$$

$$K_1 s^2 + 6K_1 s + 25K_1 + K_2 s^2 + K_3 s = 3720$$

$$K_1 + K_2 = 0 \Rightarrow K_2 = -148.8$$

$$6K_1 + K_3 = 0 \Rightarrow K_3 = -6K_1 = -892.8$$

$$V = \frac{148.8}{s} + \frac{-148.8s - 892.8}{(s+3)^2 + 4^2} - \frac{28.8}{s}$$

$$= \frac{120}{s} - 148.8 \left(\frac{s+3+3}{(s+3)^2+4^2} \right)$$

$$= \frac{120}{s} - 148.8 \underbrace{\frac{s+3}{(s+3)^2+4^2}} - \frac{148.8}{4} \times 3 \underbrace{\frac{4}{(s+3)^2+4^2}}$$

$$v(t) = \left[120 - 148.8 e^{-3t} \cos(4t) - 111.6 e^{-3t} \sin(4t) \right] u(t)$$

16.35 Find $v_o(t)$ in the circuit of Fig. 16.58.

$i_L(0^-) = 0$
$V_o(0^-) = 0$

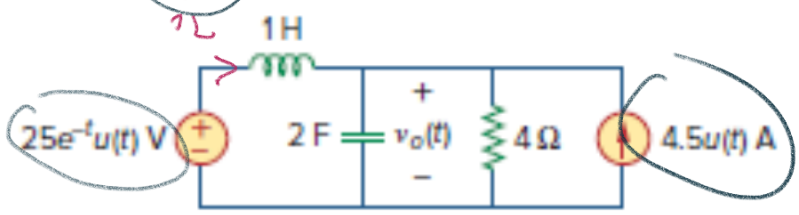

Figure 16.58
For Prob. 16.35.

$t \geq 0$

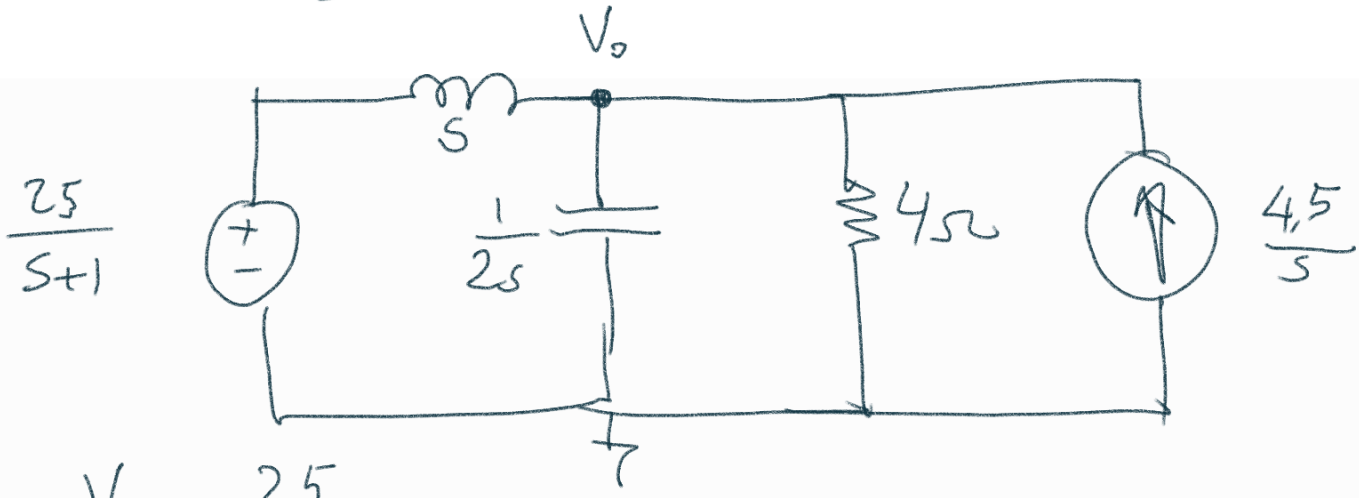

$$\frac{V_o - \frac{25}{s+1}}{s} + V_o 2s + \frac{V_o}{4} = \frac{4.5}{s}$$

$$V_o\left[\frac{1}{s} + 2s + \frac{1}{4}\right] = \frac{25}{s(s+1)} + \frac{4.5}{s}$$

$$V_o\left[\frac{8s^2 + s + 4}{4\cancel{s}}\right] = \frac{4.5s + 29.5}{\cancel{s}(s+1)}$$

$$V_o = \frac{4.5s + 29.5}{8(s+1)\underbrace{\left(s^2 + \frac{1}{8}s + \frac{1}{2}\right)}}$$

$$= \frac{K_1}{s+1} + \frac{K_2 s + K_3}{s^2 + \frac{s}{8} + \frac{1}{2}}$$

$$K_1 = \frac{25}{8\left(1 - \frac{1}{8} + \frac{1}{2}\right)} = \frac{25}{\cancel{8} \cdot \frac{11}{\cancel{8}}} = \frac{25}{11}$$

$$K_1 s^2 + \frac{K_1}{8} s + \frac{K_1}{2} + K_2 s^2 + K_3 s + K_2 s + K_3 = \frac{4.5s + 29.5}{8}$$

$$K_1 + K_2 = 0 \implies \boxed{K_2 = -\frac{25}{11}}$$

$$\frac{K_1}{8} + K_3 + K_2 = \frac{4.5}{8}$$

$$\frac{25}{88} - \frac{25}{11} + K_3 = \frac{4.5}{8} \implies \boxed{K_3 = 2.55}$$

$$\frac{K_1}{2} + K_3 = \frac{29.5}{8}$$

$$= \frac{25/11}{s+1} + \frac{-\frac{25}{11} s + 2.5}{\left(s + \frac{1}{16}\right)^2 + \frac{1}{2} - \frac{1}{256}}$$

ihmadet

$$= \frac{25/11}{s+1} + \frac{-\frac{25}{11}\left(s + \frac{1}{16}\right) + 0.14 + 2.5}{\left(s + \frac{1}{16}\right)^2 + \left(\frac{1}{\sqrt{2}}\right)^2}$$

$$= \frac{25/11}{s+1} - \frac{25}{11} \frac{s + \frac{1}{16}}{\left(s + \frac{1}{16}\right)^2 + \frac{1}{\sqrt{2}}} + 2.64\sqrt{2} \frac{\frac{1}{\sqrt{2}}}{\left(s + \frac{1}{16}\right)^2 + \left(\frac{1}{\sqrt{2}}\right)^2}$$

$$= \frac{25}{11} e^{-t} - \frac{25}{11} e^{-\frac{1}{16}t} \cos\left(\frac{1}{\sqrt{2}} t\right) + 2.64\sqrt{2}\, e^{-\frac{t}{16}} \sin\left(\frac{1}{\sqrt{2}} t\right)$$

16.42 Given the circuit in Fig. 16.65, find $i(t)$ and $v(t)$ for $t > 0$.

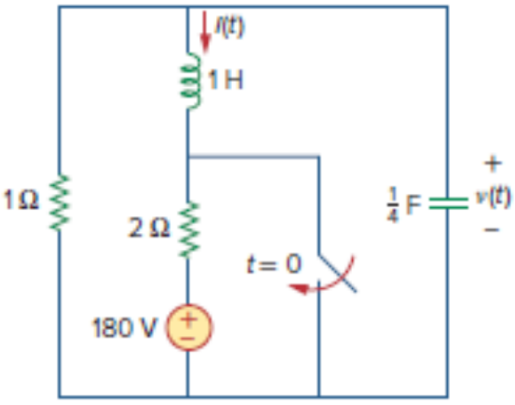

Figure 16.65
For Prob. 16.42.

$t = 0^-$

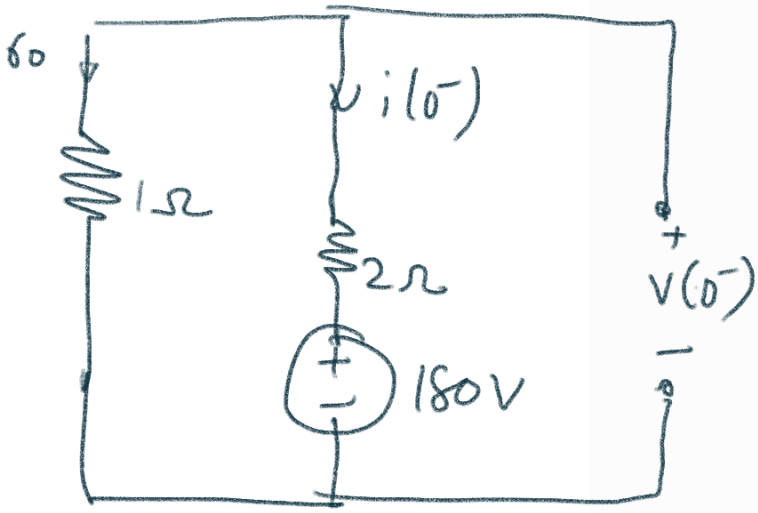

$$\boxed{\begin{aligned} i(0^-) &= -60\,A \\ v(0^-) &= 60\,V \end{aligned}}$$

$t > 0$

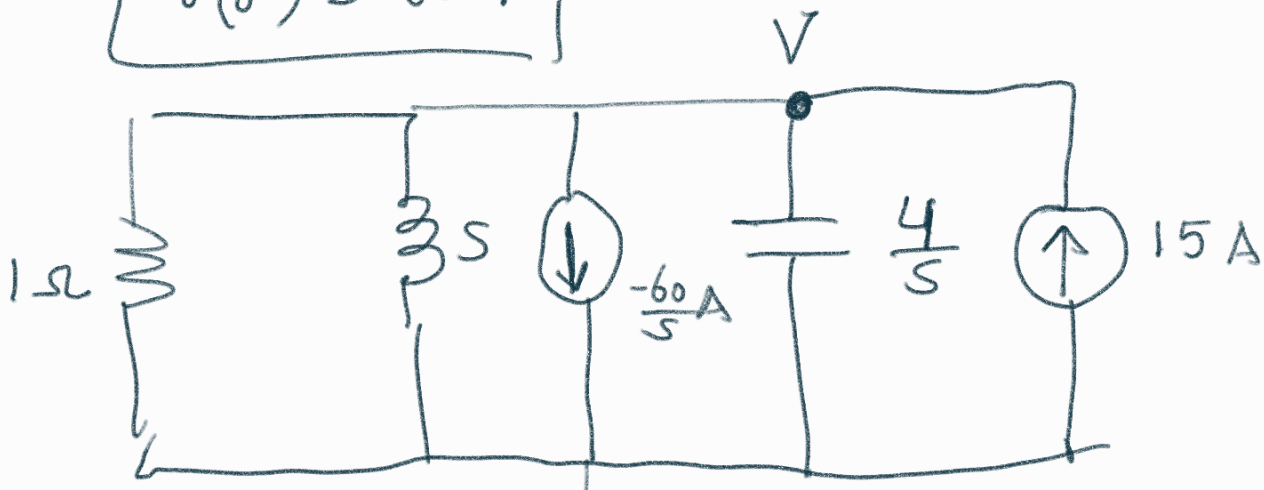

$$v_L = L\frac{di_L}{dt} \xrightarrow{\mathcal{L}} V_L = sLI_L - Li_L(0^-)$$

$$I_L = \frac{V_L + Li_L(0^-)}{sL} = \frac{V_L}{sL} + \frac{i_L(0^-)}{s}$$

$$i_C = C\frac{dv_C}{dt} \xrightarrow{\mathcal{L}} I_C = \underbrace{sCV_C}\ \underbrace{-Cv_C(0^-)}$$

$$\frac{V}{1} + \frac{V}{s} - \frac{60}{s} + \frac{Vs}{4} = 15$$

$$V\left[1 + \frac{1}{s} + \frac{s}{4}\right] = \frac{60 + 15s}{s}$$

$$V\,\frac{s^2+4s+4}{4\cancel{s}} = \frac{15(s+4)}{\cancel{s}}$$

$$V = \frac{60(s+4)}{(s+2)^2} = \frac{\overset{\nearrow 120}{K_1}}{(s+2)^2} + \frac{\overset{\nearrow 60}{K_2}}{s+2}$$

$$K_1 = 120 \qquad K_2 = \left\{\frac{d}{ds}\,60(s+4)\right\}\Bigg|_{s=-2}$$

$$= 60$$

$$v(t) = \left(120e^{-2t}\,t + 60e^{-2t}\right)u(t)$$

16.48 Find $V_x(s)$ in the circuit shown in Fig. 16.71.

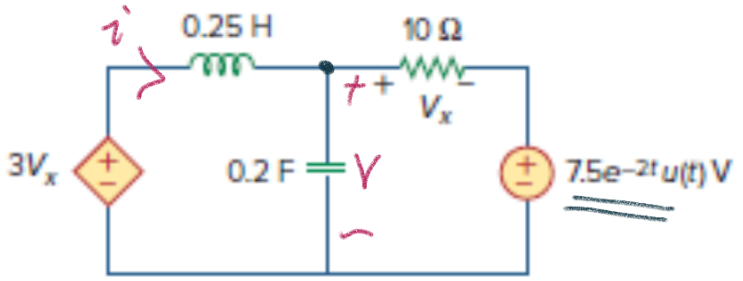

$V(0^-) = 0$

$i(0^-) = 0$

Figure 16.71
For Prob. 16.48.

$t \geq 0$

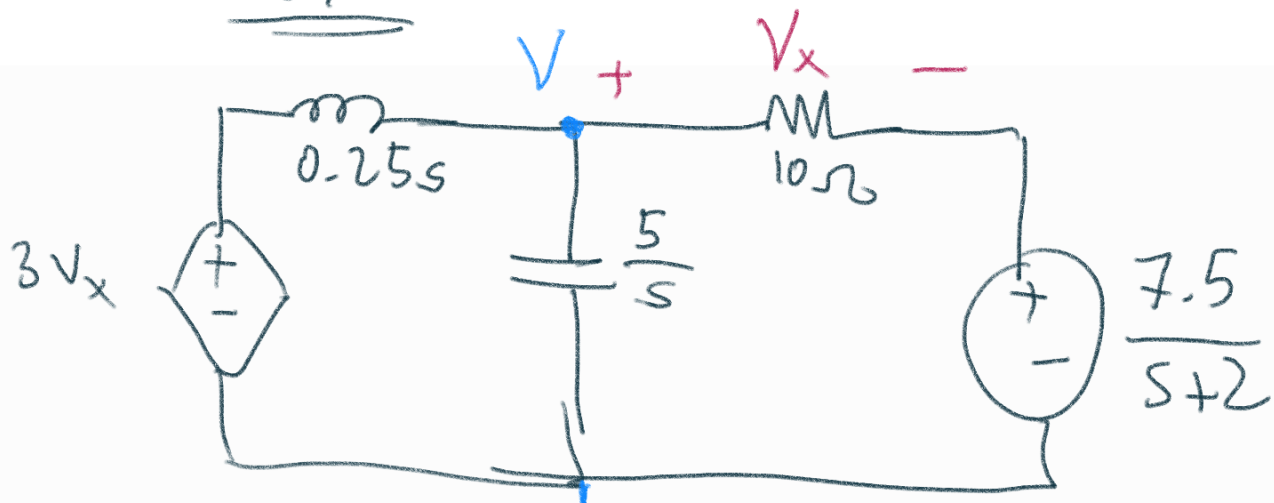

$$\frac{V - 3V_x}{0.25s} + \frac{Vs}{5} + \frac{V - \frac{7.5}{s+2}}{10} = 0$$

1

$$V_x = V - \frac{7.5}{s+2} \qquad (2)$$

$$40V - 120V_x + 2s^2 V + sV - \frac{7.5s}{s+2} = 0$$

$$V(2s^2+s+40) = 120V_x + \frac{7.5s}{s+2}$$

$$= 120V - \frac{900}{s+2} + \frac{7.5s}{s+2}$$

$$V(2s^2+s-80) = \frac{7.5s-900}{s+2}$$

$$V = \frac{7.5s-900}{(s+2)\underbrace{(2s^2+s-80)}_{\text{iki gerçel kök.}}}$$

o nedenle $v(t) \longrightarrow \infty$ ama biri pozitif

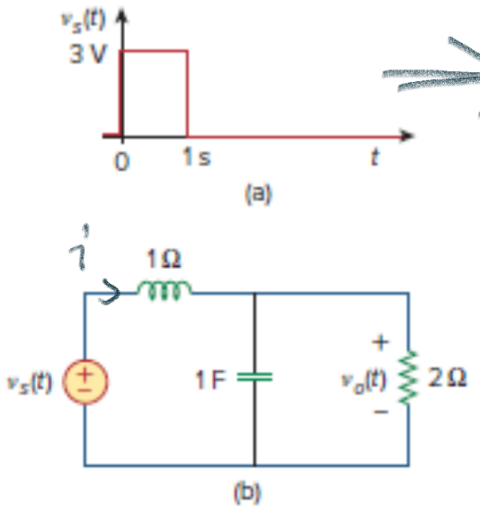

$$\Longrightarrow 3u(t) - 3u(t-1)$$

$$\downarrow \mathcal{L}$$

$$\frac{3}{s} - \frac{3e^{-s}}{s} = \frac{3}{s}(1-e^{-s})$$

$t \geq 0$

Figure 16.80
For Prob. 16.57.

$i(0^-) = 0$

$v_o(0^-) = 0$

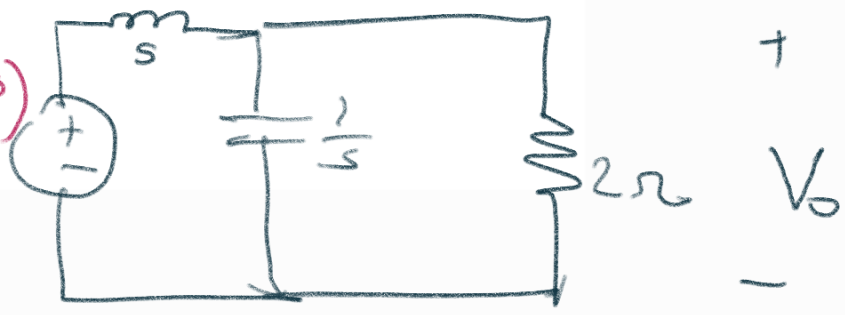

$$\frac{3}{s}\left(1-e^{-s}\right)\cdot\frac{\frac{1}{s}\,\|\,2}{\frac{1}{s}\,\|\,2 + s} = V_o$$

$$\frac{3}{s}\left(1-e^{-s}\right)\frac{\dfrac{\frac{2}{s}}{2+\frac{1}{s}}}{\dfrac{2/s}{2+\frac{1}{s}} + s} = \frac{3}{s}\left(1-e^{-s}\right)\frac{\dfrac{2}{2s+1}}{\dfrac{2}{2s+1}+s}$$

$$= \frac{3}{s}\left(1-e^{-s}\right)\frac{2}{2+2s^2+s}$$

$$= \left(1-e^{-s}\right)\frac{3}{s\left(s^2+\frac{s}{2}+1\right)}$$

$$s_{1,2} = \frac{-\frac{1}{2} \mp \sqrt{\frac{1}{4}-4}}{2}$$

$$\left(1-e^{-s}\right)\left(\frac{K_1}{s} + \frac{K_2}{s+\alpha-j\omega} + \frac{K_2^*}{s+\alpha+j\omega}\right)$$

$$\xrightarrow{\mathcal{L}^{-1}} \left(K_1 + 2|K_2|\,e^{-\alpha t}\cos(\omega t + \theta_{K_2})\right)u(t)$$

$$-\left(K_1 + 2|K_2|\right)e^{-\alpha(t-1)}\cos\left(\omega(t-1)+\theta_{K_2}\right)u(t-2)$$

16.66 For the op amp circuit in Fig. 16.89, find $v_0(t)$ for $t > 0$. Take $v_s = 12\,e^{-5t}\,u(t)$ V.

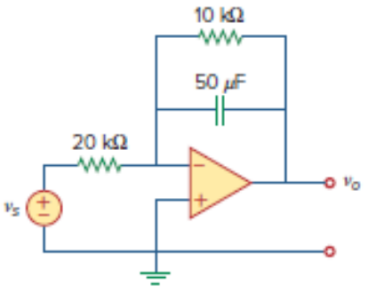

Figure 16.89
For Prob. 16.66.