13.39 A 1,200/240-V rms transformer has impedance $60\angle -30^\circ\ \Omega$ on the high-voltage side. If the transformer is connected to a $0.8\angle 10^\circ$-Ω load on the low-voltage side, determine the primary and secondary currents when the transformer is connected to 1,200 V rms.

$$\left|\frac{V_2}{V_1}\right| = \left|\frac{N_2}{N_1}\right| = \left|\frac{I_1}{I_2}\right|$$

Nokta kuralı

1) Hem V_1 hem de V_2 noktalı tarafta pozitif ise gerilim ilişkisi pozitif. Aksi halde neg.

$$\frac{V_2}{V_1} = \frac{N_2}{N_1}$$

2) Hem I_1 hem de I_2 noktalı taraftan giriyor veya çıkıyorsa, akım ilişkisi negatif

$$\frac{I_1}{I_2} = -\frac{N_2}{N_1}$$

aksi halde pozitif.

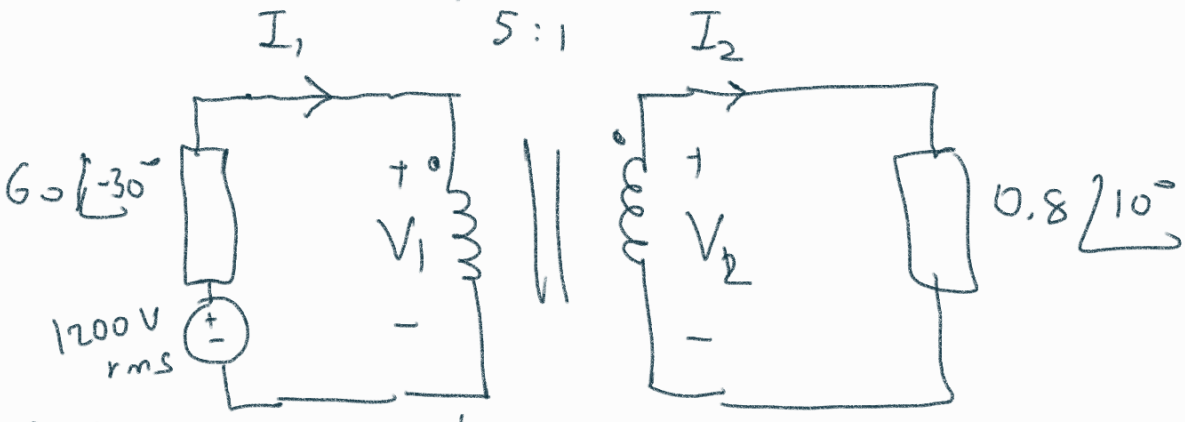

4 bilinmeyen, 4 denklem.

① $1200 = 60\angle -30\ \bar{I}_1 + \bar{V}_1$

② $\bar{V}_2 = 0.8\angle 10^\circ\ \bar{I}_2$

③ $\bar{V}_1 = 5\bar{V}_2$

④ $\bar{I}_2 = 5\bar{I}_1$

① $1200 = 60\angle{-30}\ \bar{I}_1 + 5\bar{V}_2$

② $\bar{V}_2 = 4\angle{10^\circ}\ \bar{I}_1$

$$1200 = 60\angle{-30}\ \bar{I}_1 + 20\angle{10^\circ}\ \bar{I}_1$$

$$\bar{I}_1 = \frac{1200}{60\angle{-30^\circ} + 20\angle{10^\circ}} = \frac{1200}{52 - j30 + 20 + j3.5}$$

$$\bar{I}_1 = \frac{1200}{72 - j26.5} = \frac{1200}{76.7\angle{-20.2^\circ}}$$

$$\bar{I}_1 = 15.6\angle{20.2^\circ}\ A_{rms}$$

$$\bar{I}_2 = 78\angle{20.2^\circ}\ A_{rms}$$

***13.44** In the ideal transformer circuit of Fig. 13.109, find $i_1(t)$ and $i_2(t)$.

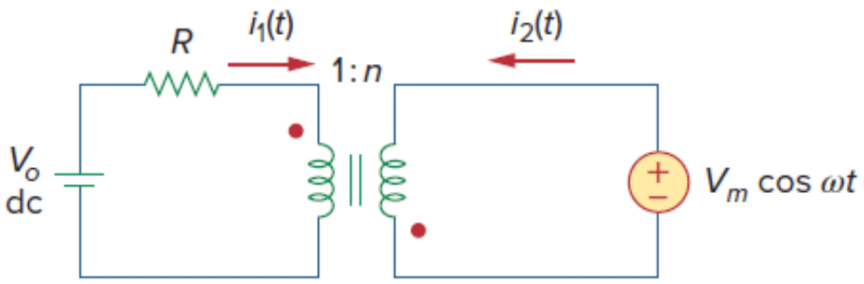

Figure 13.109
For Prob. 13.44.

DC:

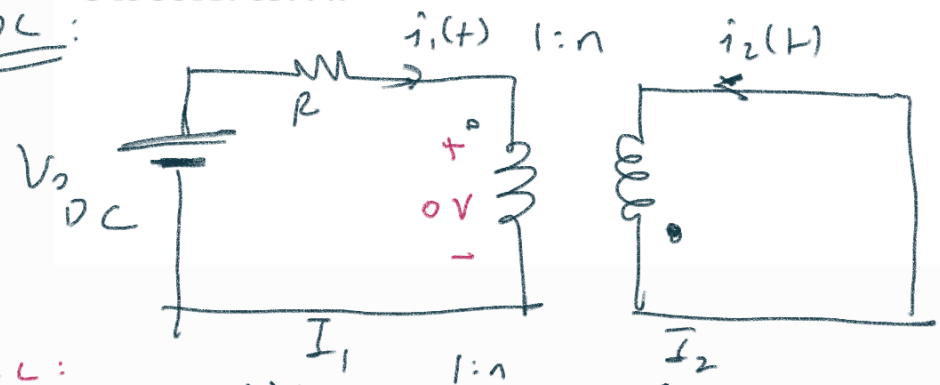

$i_1 = \frac{V_o}{R}$ DC

$i_2 = 0$ DC

AC:

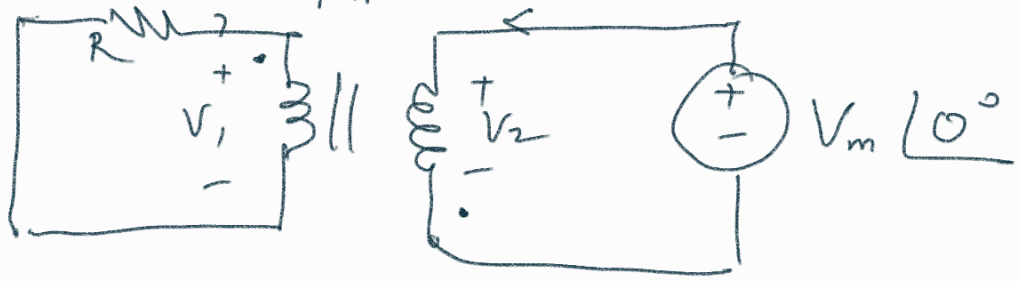

$$\boxed{I_2 = \frac{I_1}{n}}$$

$$\overline{V_2} = V_m \angle 0^\circ$$

$$\overline{V_1} = -\frac{V_m}{n} \angle 0^\circ$$

$$\overline{I_1} R - \frac{V_m}{n} = 0 \Rightarrow \overline{I_1} = \frac{V_m}{nR} \xrightarrow{\mathcal{F}^{-1}} i_1(t) = \frac{V_m}{nR}\cos(\omega t)$$

$$\overline{I_2} = \frac{V_m}{n^2 R} \xrightarrow{\mathcal{F}^{-1}} i_2(t) = \frac{V_m}{n^2 R}\cos(\omega t)$$

Toplanda

$$i_1(t) = \frac{V_0}{R} + \frac{V_m}{nR}\cos(\omega t)$$

$$i_2(t) = \frac{V_m}{n^2 R}\cos(\omega t)$$

13.50 Calculate the input impedance for the network in Fig. 13.115.

ML

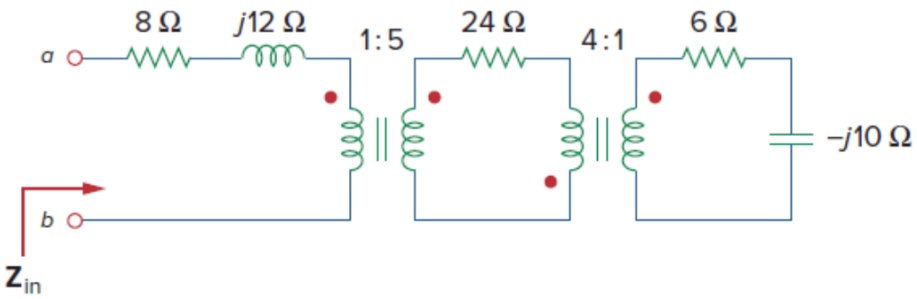

Figure 13.115
For Prob. 13.50.

Figure 13.118
For Prob. 13.53.

$$Z_{in} = \left((6-j10)\times 16 + 24\right)\frac{1}{25} + 8 + j12$$

$$= \frac{96 - j160 + 24}{25} + 8 + j12 = \frac{120 - j160}{25} + 8 + j12$$

$$= 4.8 - j6.4 + 8 + j12$$

$$Z_{in} = 12.8 + j5.6$$

13.51 Use the concept of reflected impedance to find the input impedance and current $\mathbf{I}_1$ in Fig. 13.116.

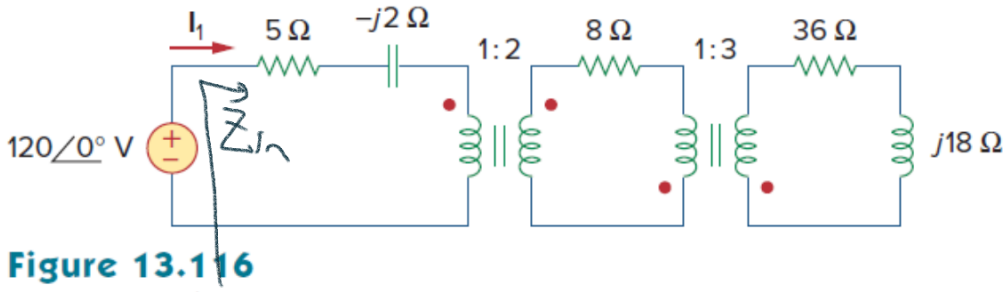

Figure 13.116
For Prob. 13.51.

$$Z_{in} = \left(\left(36 + j18 \right) \frac{1}{9} + 8 \right) \frac{1}{4} + 5 - j2$$

$$= \left(4 + j2 + 8 \right) \frac{1}{4} + 5 - j2$$

$$= 3 + j0.5 + 5 - j2 = 8 - j1.5 \ \Omega$$

$$I_1 = \frac{120\angle 0^\circ}{8 - j1.5} = \frac{120\angle 0^\circ}{8.14\angle -10.6^\circ} = 14.7\angle +10.6^\circ \text{ A}$$

13.58 Determine the average power absorbed by each resistor in the circuit of Fig. 13.123.

$P = \frac{1}{2} \times 20 \times 1.4^2 = 19.6\,W$

$P = \frac{1}{2} \times 20 \times 4.5^2 = 202.5\,W$

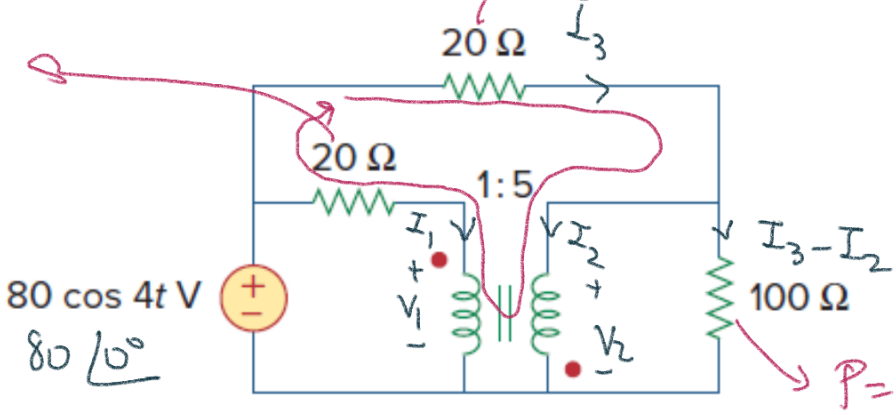

$P = \frac{1}{2} \times 100 \times 0.5^2 = 12.5\,W$

Figure 13.123
For Prob. 13.58.

(1) $80 = 20 I_1 + V_1$

$100(I_3 - I_2) = V_2$

(3) $20 I_3 + V_2 - V_1 - 20 I_1 = 0$

$V_2 = -5 V_1$

$I_1 = 5 I_2$

---

(1) $80 = 100 I_2 + V_1$

(2) $100 I_3 - 100 I_2 = -5 V_1$

(3) $20 I_3 - 5 V_1 - V_1 - 100 I_2 = 0 \Rightarrow 20 I_3 - 6 V_1 = 100 I_2$

(3) $-100 I_2 + 20 I_3 = 6 V_1$

(2) - (3) $\Rightarrow$ $80 I_3 = -11 V_1$

$$\boxed{V_1 = -\frac{80}{11} I_3}$$

(2) $100 I_3 - 100 I_2 = \frac{400}{11} I_3 \Rightarrow 64 I_3 = 100 I_2$ $\quad \frac{400}{11} \to 36$

$$\boxed{I_3 = \frac{100}{64} I_2}$$

(1) $80 = 100 I_2 - \frac{80}{11} I_3$

$80 = 100 I_2 - \underbrace{\frac{80}{11} \times \frac{100}{64}}_{11} I_2$

$80 = 89 I_2 \longrightarrow I_2 = 0.9 A$

$I_3 = 1.4 A$

$V_1 = -10.2 V$

$I_1 = \frac{80 - V_1}{20} = \frac{90.2}{20} \simeq 4.5 A$

$I_3 - I_2 = 0.5 A$

13.63 Find the mesh currents in the circuit of Fig. 13.128

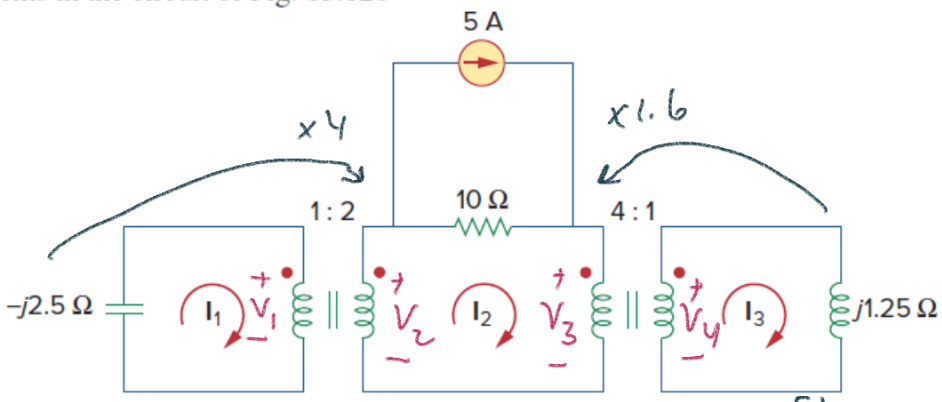

Figure 13.128
For Prob. 13.63.

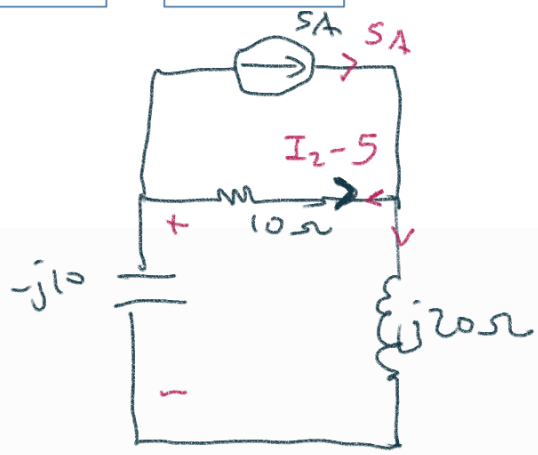

(1) $V_1 = j2.5\, I_1$

(2) $V_2 = 2V_1$

(3) $I_1 = 2I_2$

(4) $-V_2 + 10(I_2 - 5) + V_3 = 0$

(5) $V_3 = 4V_4$

(6) $I_3 = 4I_2$

(7) $V_4 = j1.25\, I_3$

$$-5 \times \frac{j10}{10 + j10} = I_2 - 5$$

$$\frac{-50\angle 90^\circ}{10\sqrt{2}\angle 45^\circ} = I_2 - 5$$

$$I_2 = 5 - \frac{5}{\sqrt{2}}\angle 45^\circ$$

$$= 5 - 2.5 - 2.5j$$

$$\boxed{I_2 = 2.5 - 2.5j}$$

$$\cong 3.5\angle -45^\circ$$

(3) $I_1 = 5 - 5j \cong 7\angle -45^\circ$

(6) $I_3 = 10 - 10j \cong 14\angle -45^\circ$

13.68 In the ideal autotransformer of Fig. 13.131, calculate $\mathbf{I}_1$, $\mathbf{I}_2$, and $\mathbf{I}_o$. Find the average power delivered to the load.

ototrafo → tek sarım var.

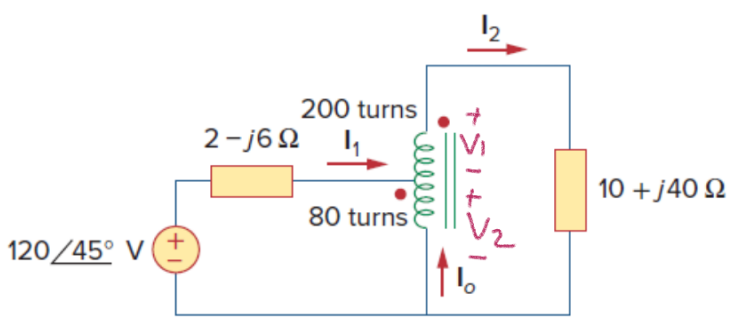

Figure 13.131
For Prob. 13.68.

(1) $-120\angle 45^\circ + (2-j6)I_1 + V_2 = 0$

(2) $-V_2 - V_1 + (10+j40)I_2 = 0$

(3) $V_1 = 2.5\,V_2$

(4) $I_0 = -2.5\,I_2$

(5) $I_1 + I_0 = I_2$

$\rightarrow I_1 = 3.5\,I_2$

(2) $3.5\,V_2 = (10+j40)\,I_2$

(1) $120\angle 45^\circ = (2-j6)I_1 + \dfrac{10+j40}{3.5}I_2$

$$120\angle 45^\circ = I_2\left[3.5(2-j6) + \frac{10+j40}{3.5}\right]$$

$$= I_2\left[\frac{24.5 - j73.5 + 10 + j40}{3.5}\right]$$

$$120\angle 45^\circ = I_2\left[\frac{34.5 - j23.5}{3.5}\right]$$

$$\frac{420\angle 45^\circ}{34.5 - j23.5} = I_2 = \frac{420\angle 45^\circ}{42\angle -34^\circ} = 10\angle 11^\circ \text{ A} \;//$$

$$I_1 = 3.5\,I_2 = 35\angle 11^\circ \text{ A} \;//$$

$$I_0 = -2.5\,I_2 = -25\angle 11^\circ$$

$$= 25\angle -169^\circ \text{ A} \;//$$

13.77 The three-phase system of a town distributes power with a line voltage of 13.2 kV. A pole transformer connected to single wire and ground steps down the high-voltage wire to 120 V rms and serves a house as shown in Fig. 13.139.

(a) Calculate the turns ratio of the pole transformer to get 120 V.

(b) Determine how much current a 100-W lamp connected to the 120-V hot line draws from the high-voltage line.

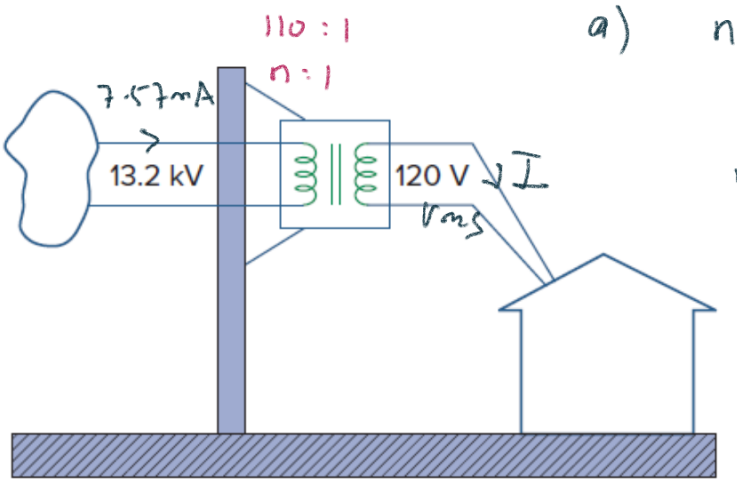

Figure 13.139
For Prob. 13.77.

a) $n = \frac{13200}{120}$

$n = 110$

b) $120\,I^* = 100$

$|I| = \frac{1}{1.2}$ A

$I_{\text{high voltge}} = \frac{I}{110}$

$= \frac{1}{132}$ A

$= 7.57$ mA

Geler

13.95 Ten bulbs in parallel are supplied by a 7,200/120-V transformer as shown in Fig. 13.147, where the bulbs are modeled by the 144-Ω resistors. Find:

(a) the turns ratio n,

(b) the current through the primary winding.

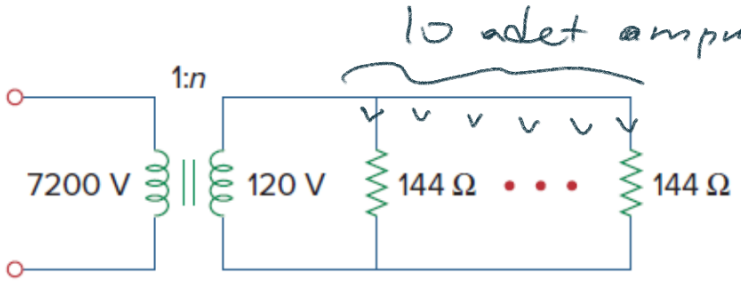

Figure 13.147
For Prob. 13.95

a) $n = \frac{1}{60}$ olmalıdır.

b) her bir akım $= \frac{120}{144} = \frac{100}{120}$ A

Toplam ikincil akım $= \frac{1000}{120}$

Birincil akım $= \frac{1000}{120} \cdot \frac{1}{60}$ olur.

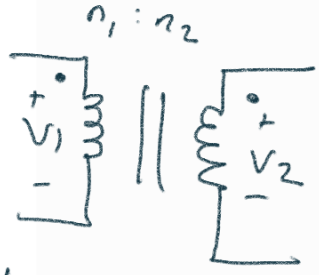

$\frac{V_2}{V_1} = \frac{n_2}{n_1}$

nokta ters olsaydı

$\frac{V_2}{V_1} = -\frac{n_2}{n_1}$

13.91 A 25,000/240-V rms distribution transformer has a primary current rating of 75 A.

(a) Find the transformer kVA rating.

(b) Calculate the secondary current.

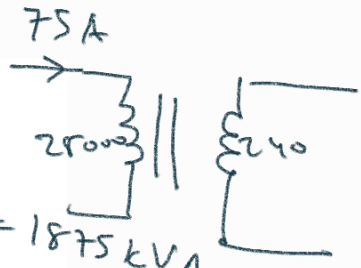

$25000 \times 75 = 1875$ kVA

$I_2 = \frac{25000}{240} \times 75 = 7812.5$ A

13.92 A 4,800-V rms transmission line feeds a distribution transformer with 1,200 turns on the primary and 28 turns on the secondary. When a 10-Ω load is connected across the secondary, find:

(a) the secondary voltage,

(b) the primary and secondary currents,

(c) the power supplied to the load.

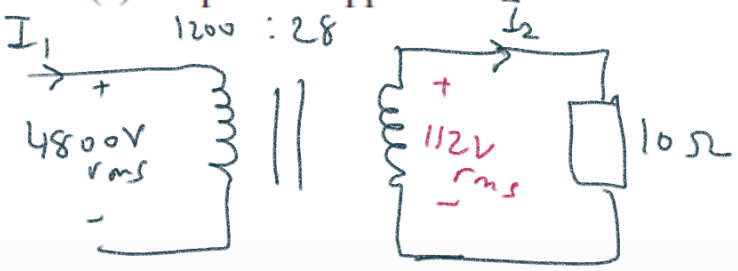

a) $\frac{28}{1200} \times 4800 = 112$ V rms

b) $I_2 = 11.2$ A ikincil akım

$I_1 = \frac{28}{1200} \times 11.2 = 0.261$ A birincil akım

c) $P_{10\Omega} = \frac{|112|^2}{10} = 1.2.6$ kW yüke verilen güç.

9.74 The value of k in the circuit in Fig. P9.74 is adjusted so that Z_{ab} is purely resistive when $\omega = 4$ krad/s. Find Z_{ab}.

4000

$M = k\sqrt{L_1 L_2}$

$\frac{10^6}{j4000 \times 12.5} = \frac{1000}{j50} = -j20$

Figure P9.74

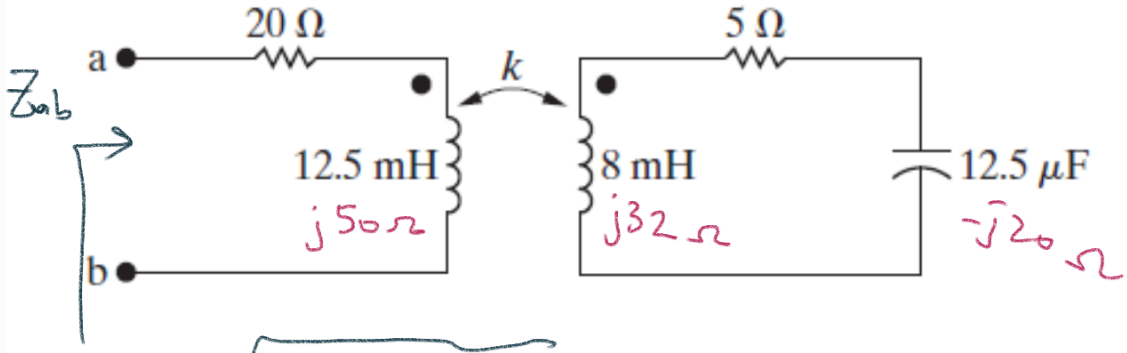

$$M = k\sqrt{12.5 \times 8 \times 10^{-6}} = k\,10^{-2}$$

$$\omega M = 4000 \times k \times 10^{-2} = 40k$$

$$Z_{ab} = 20 + j50 + \frac{40^2 k^2}{5 + j12}$$

$$= 20 + j50 + \frac{1600k^2(5 - j12)}{169}$$

$Z_{ab} \in \mathbb{R}$ istiyoruz. O zaman

$$50 - \frac{1600k^2 \times 12}{169} = 0$$

$$k = \sqrt{\frac{50 \times 169}{1600 \times 12}} = 0.66 \text{ olmalıdır.}$$

9.77 The sinusoidal voltage source in the circuit seen in Fig. P9.77 is operating at a frequency of 200 krad/s. The coefficient of coupling is adjusted until the peak amplitude of i_1 is maximum.

PSPICE MULTISIM

a) What is the value of k?

b) What is the peak amplitude of i_1 if $v_g = 560\cos(2 \times 10^5 t)$ V?

$\omega M = 2\times10^5\, k\sqrt{10^{-3}\times 4\times10^{-3}}$

$= k400$

$\dfrac{10^9}{j12.5\times 2\times10^5} = \dfrac{10^4}{j25} = -j400$

Figure P9.77

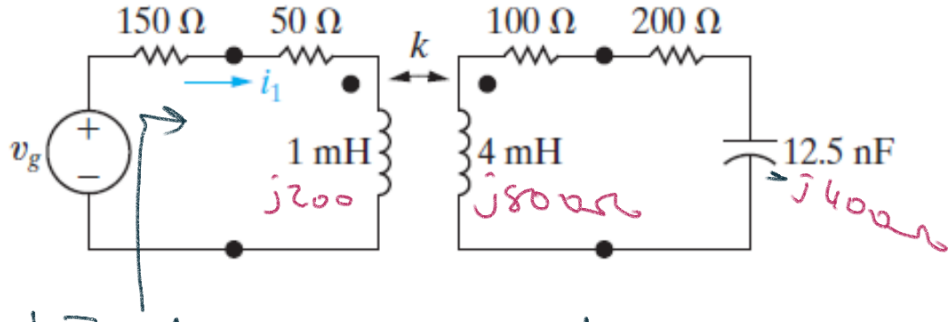

$|Z_{in}|$ minimize edilecek.

$$Z_{in} = 150 + 50 + j200 + \frac{k^2\, 160000}{300 + j400}$$

$$= 200 + j200 + \frac{k^2\, 1600\,(3-j4)}{(3+j4)(3-j4)}$$

$$= 200 + j200 + k^2\, 64(3-j4)$$

$$= (200 + 192k^2) + j(200 - 256k^2)$$

$$\underset{k}{\arg\min}\left\{(200+192k^2)^2 + (200-256k^2)^2\right\} = k^*$$

$$\underset{k}{\arg\min}\left\{(25+24k^2)^2 + (25-32k^2)^2\right\}$$

$$\cancel{2}(25+24k^2)\,48\cancel{k} - \cancel{2}(25-32k^2)\,64\cancel{k} = 0$$

$$(25+24k^2)\,\cancel{48}^{\,3} = (25-32k^2)\,\cancel{64}^{\,4}$$

$$75 + 72k^2 = 100 - 128k^2$$

$200k^2 = 25$

$k = \sqrt{\frac{25}{200}} = \sqrt{\frac{1}{8}} = \frac{1}{2\sqrt{2}}$ olmalı.

O zaman:

$Z_{in} = 200 + j200 + 8(3-j4)$ olur.

$= 224 + j168$

$I_1 = \frac{560\angle 0^\circ}{224 + j168}$

peak amplitude $= |I_1| = 2$ A

10.64 a) If N_1 equals 1000 turns, how many turns should be placed on the N_2 winding of the ideal transformer in the circuit seen in Fig. P10.64 so that maximum average power is delivered to the 6800 Ω load?

b) Find the average power delivered to the 6800 Ω resistor.

c) What percentage of the average power delivered by the ideal voltage source is dissipated in the linear transformer?

Figure P10.64

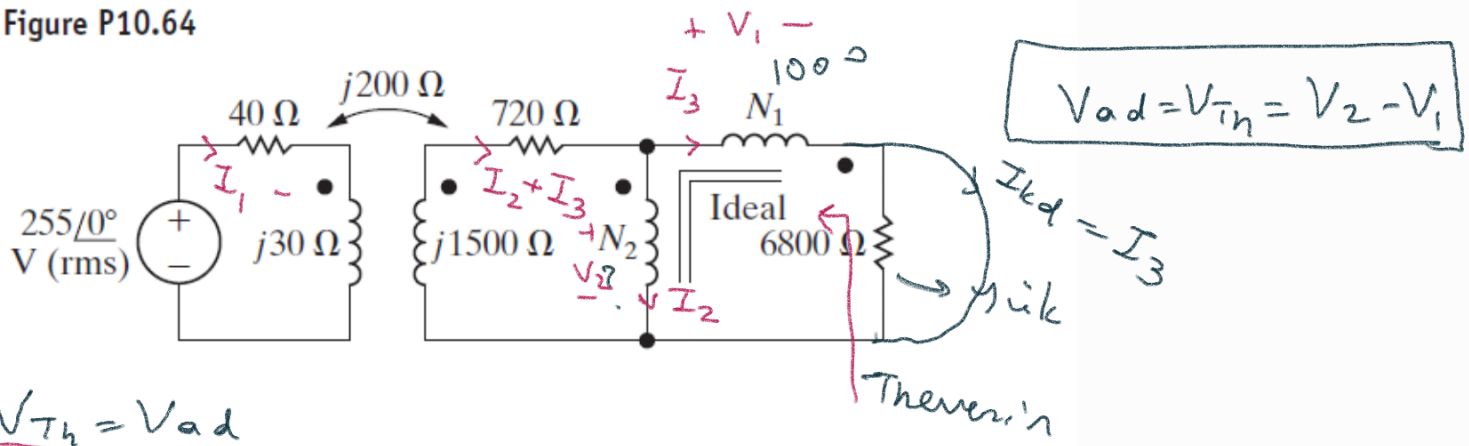

$V_{Th} = V_{ad}$

(1) $255 = 40I_1 + j30I_1 - j200(I_2 + I_3)$

(2) $j1500(I_2 + I_3) + 720(I_2 + I_3) + V_2 - j200I_1 = 0$

(3) $\frac{V_2}{V_1} = \frac{-N_2}{1000}$ (4) $\frac{I_2}{I_3} = \frac{1000}{N_2}$ (3) $1000V_2 = -N_2V_1$

açık devre olduğu için $I_3 = 0 \longrightarrow (4)$ $I_2 = 0$

(1) $255 = (40 + j30) I_1 \longrightarrow I_1 = \dfrac{255}{50\angle 37^\circ} A$

(2) $V_2 = j200 I_1 \longrightarrow V_2 = 200\angle 90^\circ \dfrac{255}{50\angle 37^\circ} = 1020\angle 53^\circ V$

(3) $V_1 = \dfrac{-1000 V_2}{N_2} \longrightarrow -\dfrac{1000}{N_2} \times 1020\angle 53^\circ V$

$V_{Th} = V_2 - V_1 = 1020\angle 53^\circ \left(1 + \dfrac{1000}{N_2}\right)$

$I_{kd} = I_3$

$V_2 = V_1$ olmalı $\longrightarrow$ O zaman $V_2 = V_1 = 0$

çünkü aynı zamanda (3)'ü sağlanası lazım.

(1) $255 = (40 + j30) I_1 - j200 I_2 - j200 I_3$

(2) $(720 + j1500) I_2 + (720 + j1500) I_3 - j200 I_1 = 0$

(4) $\dfrac{I_2}{I_3} = \dfrac{1000}{N_2} \longrightarrow \boxed{I_2 = \dfrac{1000}{N_2} I_3}$

(1) $255 = (40 + j30) I_1 - j200 \left(1 + \dfrac{1000}{N_2}\right) I_3$

(2) $(720 + j1500)\left(1 + \dfrac{1000}{N_2}\right) I_3 = j200 I_1$

(2) $I_1 = \dfrac{720 + j1500}{j200}\left(1 + \dfrac{1000}{N_2}\right) I_3$

(1) $255 = I_3 \left[(40 + j30)\left(\dfrac{720 + j1500}{j200}\right)\left(1 + \dfrac{1000}{N_2}\right) - j200\left(1 + \dfrac{1000}{N_2}\right) \right]$

$255 = I_3 \left(1 + \dfrac{1000}{N_2}\right) \underbrace{\left[(40 + j30)\left(\dfrac{720 + j1500}{j200}\right) - j200 \right]}_{?}$

$$255 = I_3\left(1+\frac{1000}{N_2}\right)\left[\frac{28800 + j60000 + j21600 - 45000 + 40000}{j200}\right]$$

$$255 = I_3\left(1+\frac{1000}{N_2}\right)\frac{23800 + j81600}{j200}$$

$$I_3 = \frac{255\ j200}{\left(1+\frac{1000}{N_2}\right)(23800 + j81600)} = I_{kd}$$

$$Z_{Th} = \frac{V_{ad}}{I_{kd}} = \frac{1020\angle 53^\circ \left(1+\frac{1000}{N_2}\right)^2 (23800 + j81600)}{j51000}$$

$$|Z_{Th}| = 6800 \text{ ohmah}$$

$$|Z_{Th}| = \frac{1020}{51000}\ 85000\left(1+\frac{1000}{N_2}\right)^2 = 6800$$

$$\left(1+\frac{1000}{N_2}\right)^2 = 4 \Rightarrow 1+\frac{1000}{N_2} = 2$$

$$\boxed{2 = 1000}$$

10.64 a) If N_1 equals 1000 turns, how many turns should be placed on the N_2 winding of the ideal transformer in the circuit seen in Fig. P10.64 so that maximum average power is delivered to the 6800 Ω load?

b) Find the average power delivered to the 6800 Ω resistor.

c) What percentage of the average power delivered by the ideal voltage source is dissipated in the linear transformer?

Figure P10.64

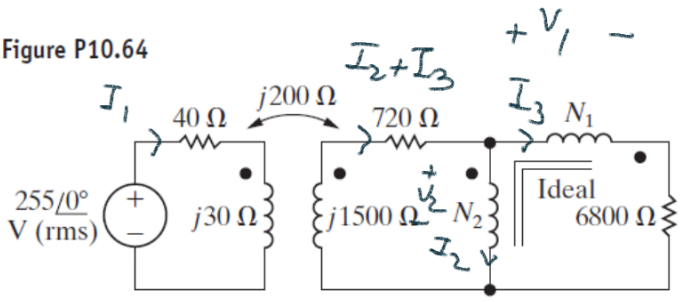

(1) $255 = (40+j30)I_1 - j200(I_2+I_3)$

(2) $(720+j1500)(I_2+I_3) + V_2 - j200 I_1 = 0$

(3) $V_2 = V_1 + 6800 I_3 \xrightarrow{(4)} \boxed{V_2 = 3400 I_3}$

(4) $\Rightarrow V_2 = -V_1$

(5) $I_2 = I_3$

(1) $255 = (40+j30) I_1 - j400 I_3$

(2) $(1440+j3000) I_3 + 3400 I_3 = j200 I_1$

$$\boxed{\frac{(4840+j3000)}{j200} I_3 = I_1}$$

(1) $$255 = \left((40+j30) \frac{(4840+j3000)}{j200} - j400 \right) I_3$$

$$255 = I_3 \frac{193600 + j120000 + j145200 - 90000 + 80000}{j200}$$

$$255 = \frac{183600 + j265200}{j200} I_3$$

$$\boxed{I_3 = \frac{j5100}{183600 + j265200}}$$

$$P_{6800\Omega} = |I_3|^2 6800 = \frac{510^2}{(1836^2 + 2652^2)} 6800 = \underline{\underline{170\,W}}$$

$$\overline{S}_{255V} = -255 \times I_1^*$$

$$I_1 = \frac{j510}{1836 + j2652} \frac{4840 + j3000}{j200}$$

$$I_1 = \frac{51\,(242+j150)}{1836+j2652} = \frac{51 \times 284.7\,\angle 31.8^\circ}{3225.5\,\angle 55.3^\circ}$$

$$= 4.5\,\angle -13.5^\circ$$

$$\bar{S}_{255} = -255 \times 4.5\,\angle 13.5^\circ$$

$$=$$

$\bar{P}_{255} = -1116$ W kaynakta sağlanan ort. güç.

CHAPTER 14: FREKANS TEPKİSİ

$$\frac{V_o}{V_i} = H \qquad \frac{V_o(j\omega)}{V_i(j\omega)} = H(j\omega)$$ Transfer Fonksiyonu

14.5 For the circuit shown in Fig. 14.72, find $\mathbf{H}(s) = \mathbf{V}_o/\mathbf{I}_s$.

$\boxed{j\omega = s}$

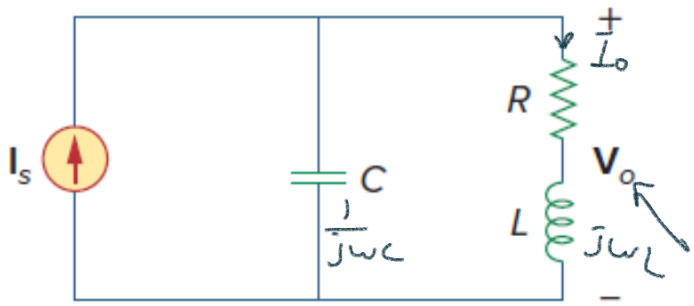

Figure 14.72
For Prob. 14.5.

$$V_o(j\omega) = I_s(j\omega)\,\frac{\frac{1}{j\omega C}}{R+j\omega L+\frac{1}{j\omega C}} \times (R+j\omega L)$$

$$H(j\omega) = \frac{V_o(j\omega)}{I_s(j\omega)} = \frac{R+j\omega L}{j\omega C\left(R+j\omega L+\frac{1}{j\omega C}\right)} = \frac{R+j\omega L}{j\omega RC-\omega^2 LC+1}$$

$\omega \to 0 \quad : \quad H(j\omega) \to R$

$\omega \to \infty \quad : \quad H(j\omega) \to 0$

$$\omega = \frac{1}{\sqrt{LC}} \quad : \quad \frac{R + j\sqrt{\frac{L}{C}}}{jR\sqrt{\frac{C}{L}}}$$

Section 14.3 The Decibel Scale

14.7 Calculate $|H(\omega)|$ if H_{dB} equals

(a) 0.1 dB (b) −5 dB (c) 215 dB

$$X_{[dB]} = 20 \log_{10}(X) \xrightarrow{\text{Tersi}} 10^{\frac{X_{dB}}{20}} = X$$

büyüklük.

$$X_{[dB]} = 10 \log_{10}(X)$$

güç.

a) 0.1 dB $\Rightarrow$ $10^{\frac{0.1}{20}} = 10^{0.005} \cong 1.012$

b) −5 dB $\Rightarrow$ $10^{-\frac{5}{20}} = 0.56$

c) 215 dB $\Rightarrow$ $10^{\frac{215}{20}} = 56234132519$

$2 \xrightarrow{dB} 20 \times \log_{10} 2 \cong 6$ dB

$4 \xrightarrow{dB} 12$ dB

$8 \longrightarrow 18$ dB

$10 \longrightarrow 20$ dB

$50 \longrightarrow 40 - 6 = 34$ dB

$25 \longrightarrow 40 - 12 = 28$ dB

14.14 Draw the Bode plots for

$$\underbrace{(j\omega)^2}_{s^2} = -\omega^2$$

$$\mathbf{H}(\omega) = \frac{250(j\omega + 1)}{j\omega(-\omega^2 + 10\,j\omega + 25)}$$

$$1+(1/s) = \frac{250\,(s+1)}{s\,(+s^2+10s+25)} = \frac{250\,(s+1)}{s\,(s+5)^2}$$

$$H_{dB} = 20\log_{10} H$$

$$H(j\omega) = \frac{K\,(j\omega)^{\pm 1}\left(1+\frac{j\omega}{z_1}\right)\left[1+\frac{j2\rho_1\omega}{\omega_k}+\left(\frac{j\omega}{\omega_k}\right)^2\right]}{\left(1+\frac{j\omega}{p_1}\right)\left[1+\frac{j2\rho_2\omega}{\omega_n}+\left(\frac{j\omega}{\omega_n}\right)^2\right]}$$

zero zero

pole pole

1) Kazanç : K

2) Orijinde bir kutup veya sıfır. $(j\omega)^{\pm 1}$

3) Basit kutuplar veya sıfırlar. $\left(1+\frac{j\omega}{z}\right)$ $\frac{1}{1+\frac{j\omega}{p}}$

4) Kuadratik kutuplar veya sıfırlar.

$$\left[1+\frac{j2\rho_1\omega}{\omega_k}+\left(\frac{j\omega}{\omega_k}\right)^2\right]$$

$$H(\omega) = \frac{250\,(1+j\omega)}{j\omega\,(-\omega^2+10j\omega+25)} = \frac{10\,\cancel{250}\,(1+j\omega)}{\cancel{25}\,(j\omega)\left(\left(\frac{j\omega}{5}\right)^2+\frac{2j\omega}{5}+1\right)}$$

(kuadratik kutup : $\omega_k = 5$ $\rho_1 = 1$)

$10 \longrightarrow 20\,dB$

$\left|\frac{1}{j\omega}\right| \longrightarrow -20\log_{10}(\omega)\ dB$

$|1+j\omega| \longrightarrow$

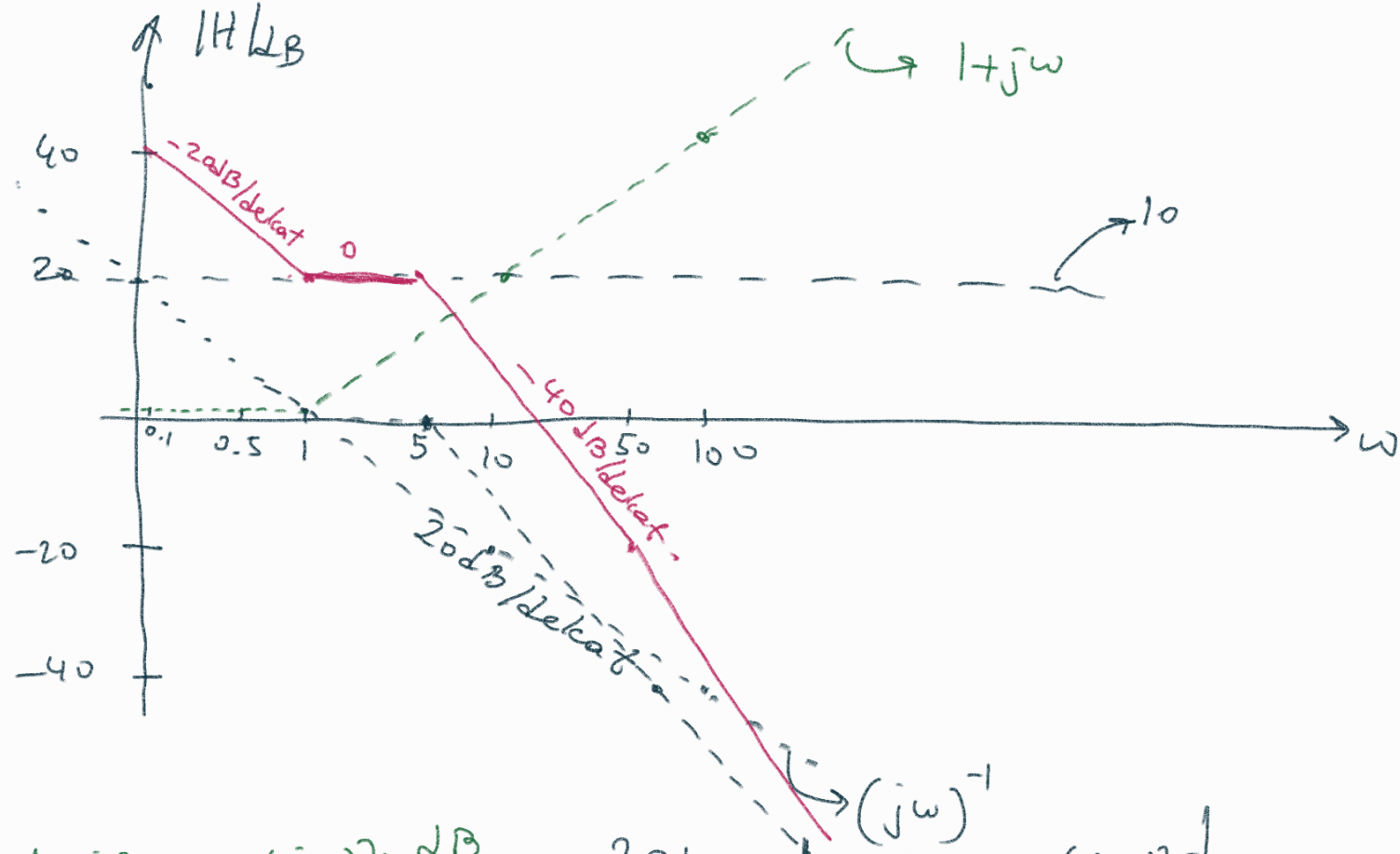

$$1+j\frac{2\omega}{5}+\left(\frac{j\omega}{5}\right)^2 \xrightarrow{dB} 20\log_{10}\left|1+j\frac{2\omega}{5}+\left(\frac{j\omega}{5}\right)^2\right|$$

sıfır: 5'ten sonra 40dB/dekat hızla yukarı

kutup: " " " " aşağı.

Açı grafiği:

1) Kazanç K: $\theta = 0$ sabit

2) Orijinde sıfır: $j\omega \Rightarrow \theta = 90^\circ$ sabit

" kutup: $(j\omega)^{-1} \Rightarrow \theta = -90^\circ$ sabit

3) Basit sıfır $1+\frac{j\omega}{z} \Rightarrow$ $\omega = z \Rightarrow \theta = 45^\circ$

$\omega = \frac{z}{10} \Rightarrow \theta \simeq 0^\circ$

$\omega = 10z \Rightarrow \theta \simeq 90^\circ$

$\omega > 10z \Rightarrow \theta \simeq 90^\circ$

$\omega < \frac{z}{10} \Rightarrow \theta \simeq 0^\circ$

Basit kutup $\frac{1}{1+\frac{j\omega}{p}} \Rightarrow$ 0°, -45°, -90°

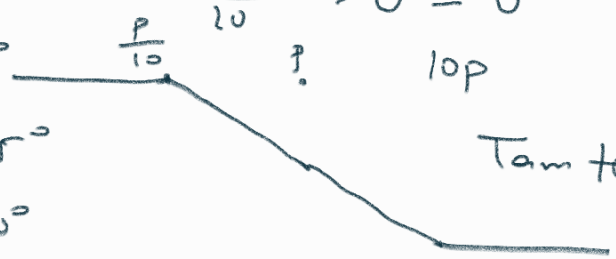

Tam ters.

Kuadratik sıfır: $1 + \frac{j2\rho_1 \omega}{z} + \left(\frac{j\omega}{z}\right)^2$

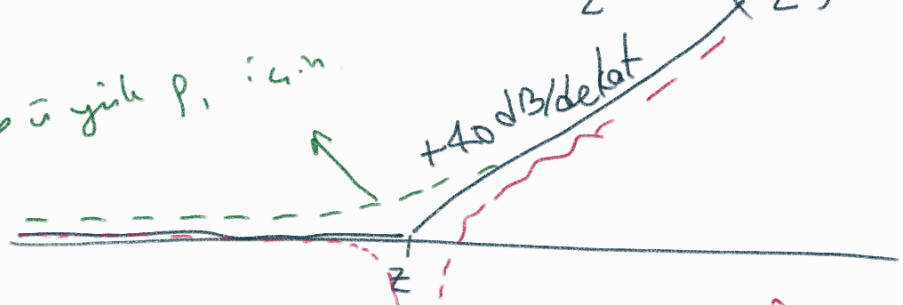

Kuadratik kutup: Tam ters. → küçük ρ_1 için

$$1 + j2\frac{\omega}{5} + \left(\frac{j\omega}{5}\right)^2 \Rightarrow \boxed{\rho = 1}$$

$\frac{\omega}{5} \to z$, $\frac{j\omega}{5} \to z$

14.14 Draw the Bode plots for

$$\mathbf{H}(\omega) = \frac{250(j\omega + 1)}{j\omega(-\omega^2 + 10\,j\omega + 25)}$$

$$\frac{10(1+j\omega)}{j\omega\left(1 + 2\frac{j\omega}{5} + \left(\frac{j\omega}{5}\right)^2\right)}$$

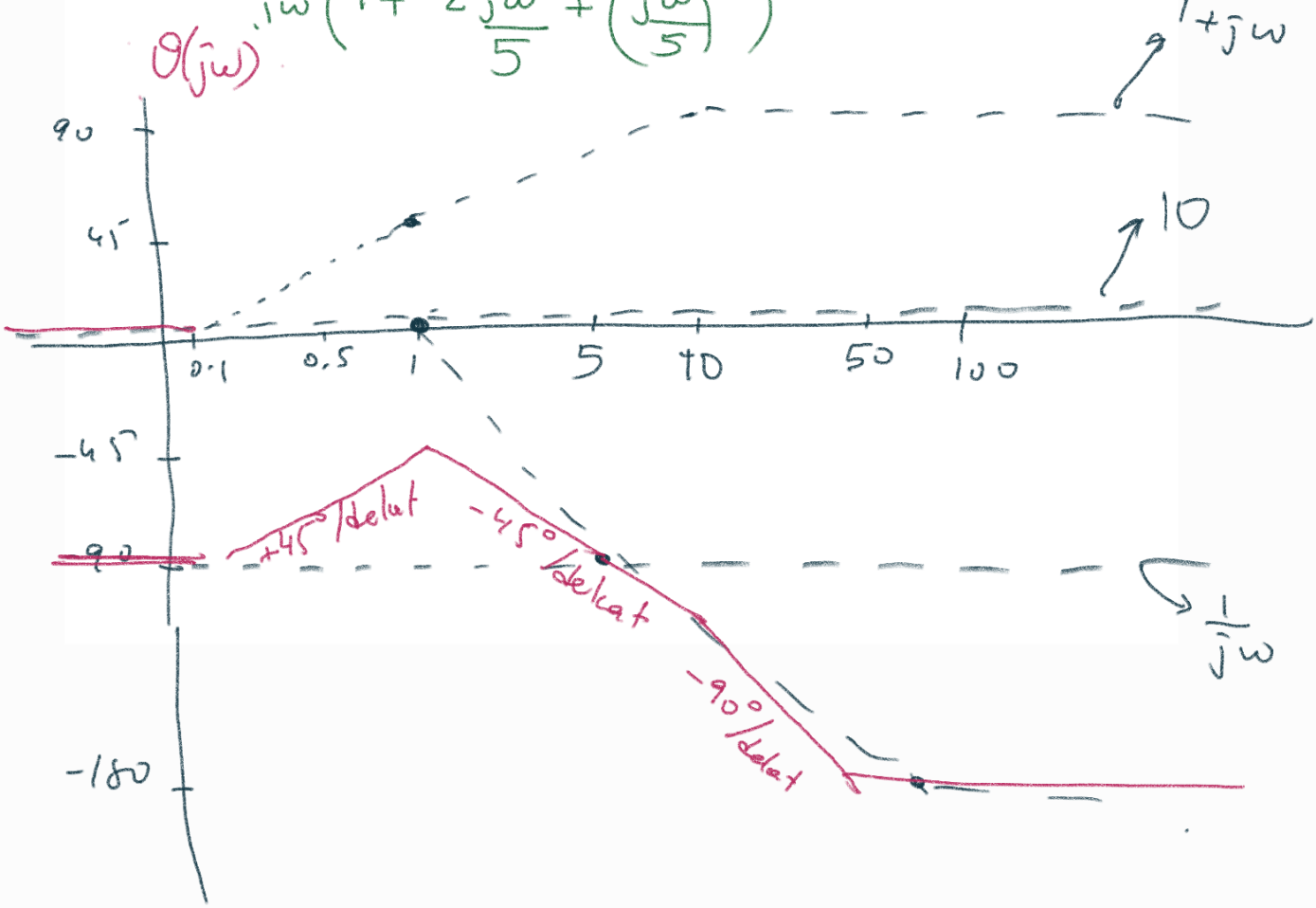

14.16 Sketch Bode magnitude and phase plots for

$$H(s) = \frac{1.6}{s(s^2 + s + 16)}, \quad s = j\omega$$

$$H(j\omega) = \frac{1.6}{(j\omega)\left(16 + j\omega + (j\omega)^2\right)} = \frac{\cancel{1.6}}{j\omega\,\underset{10}{\cancel{16}}\left(1 + \frac{j2\omega}{32} + \left(\frac{j\omega}{4}\right)^2\right)}$$

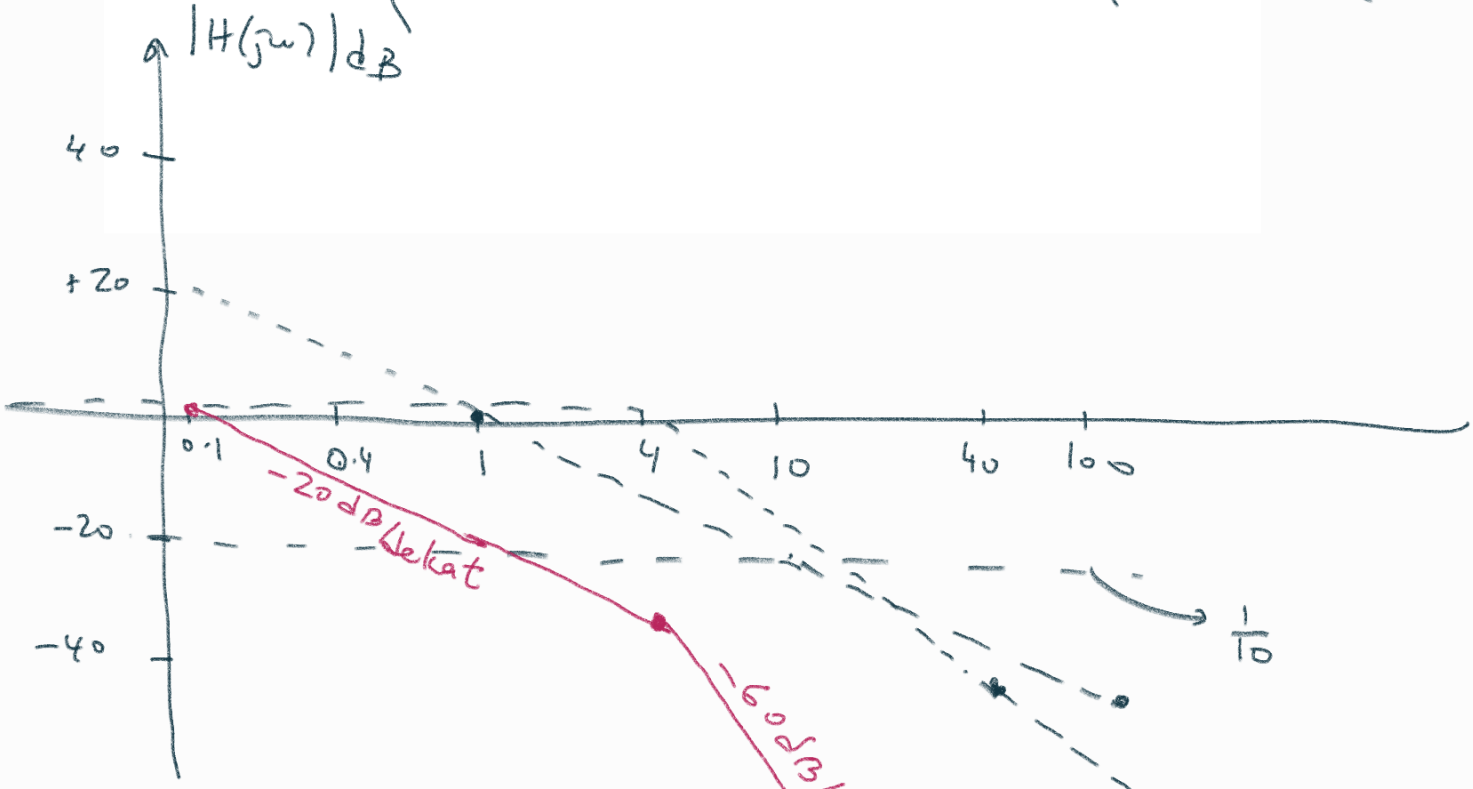

önemli noktalar : ω = 0.1 , 1 , 10 , 4 , 0.4 , 40

14.19 Sketch the asymptotic Bode plots of the magnitude and phase for

$$H(s) = \frac{80s}{(s+10)(s+20)(s+40)}, \qquad s = j\omega$$

$$H(j\omega) = \frac{80\,j\omega}{(j\omega+10)(j\omega+20)(j\omega+40)}$$

$$= \frac{\cancel{80}\,j\omega}{100\,\cancel{10}\left(1+\frac{j\omega}{10}\right)\cancel{20}\left(1+\frac{j\omega}{20}\right)\cancel{40}\left(1+\frac{j\omega}{40}\right)}$$

$$= \frac{j\omega}{100\left(1+\frac{j\omega}{10}\right)\left(1+\frac{j\omega}{20}\right)\left(1+\frac{j\omega}{40}\right)}$$

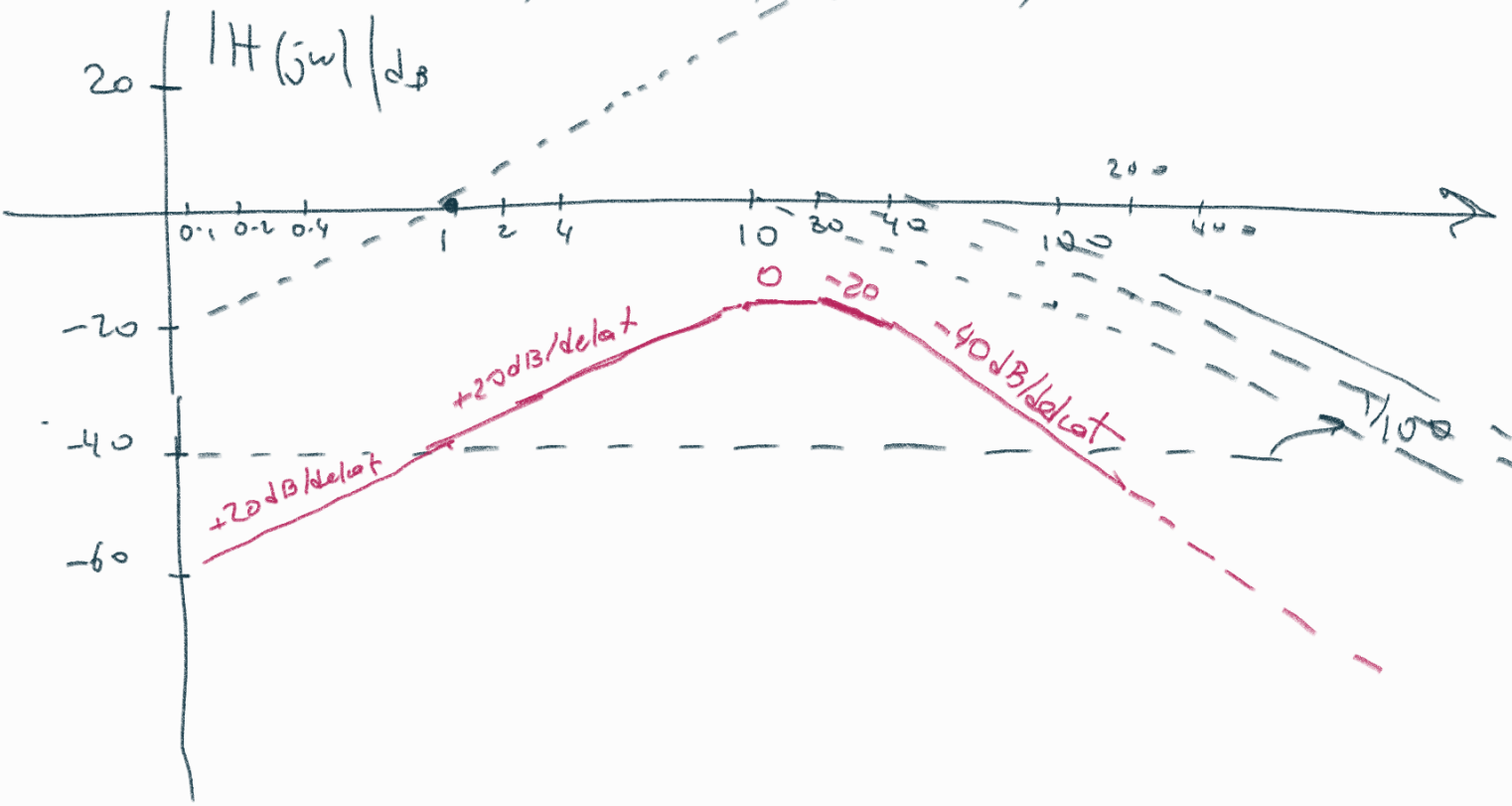

Önemli noktalar: 0.1, 0.2, 0.4, 1, 2, 4, 10, 20, 40

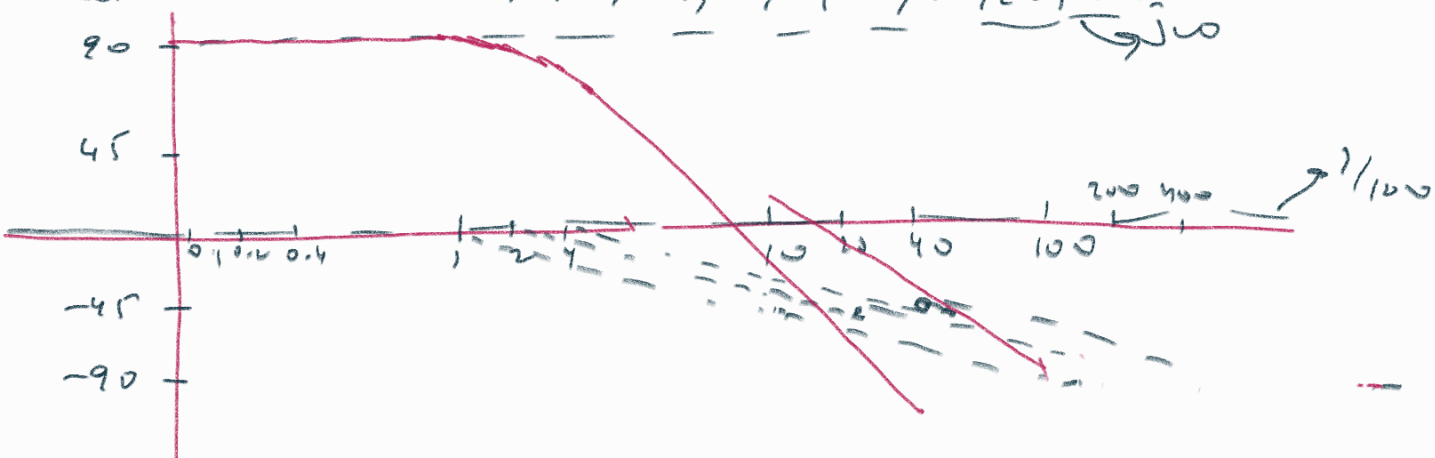

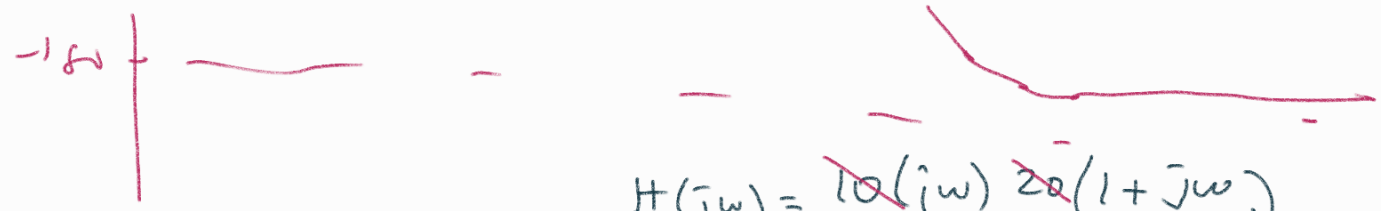

$$H(j\omega) = \frac{\cancel{10}(j\omega)\,\cancel{20}\left(1+\frac{j\omega}{20}\right)}{\cancel{2}(1+j\omega)\,\cancel{7.5}\left(1+\frac{j\omega}{7.5}\right)\cancel{52.5}\left(1+\frac{j\omega}{52.5}\right)}$$

14.21 Sketch the magnitude Bode plot for

$$H(s) = \frac{10s(s+20)}{(s+1)(s^2+60s+400)}, \qquad s = j\omega$$

$$\frac{-60 \mp \sqrt{3600-1600}}{2}$$

$$\frac{-60 \mp \sqrt{2000}}{2} = (-7.5, -52.5)$$

$$H(s) = \frac{10\,s(s+20)}{(s+1)(s+7.5)(s+52.5)}$$

önemli noktalar: 0.1, 0.75, 1, 2, 7.5, 20, 52.5, 75, 200
5.25

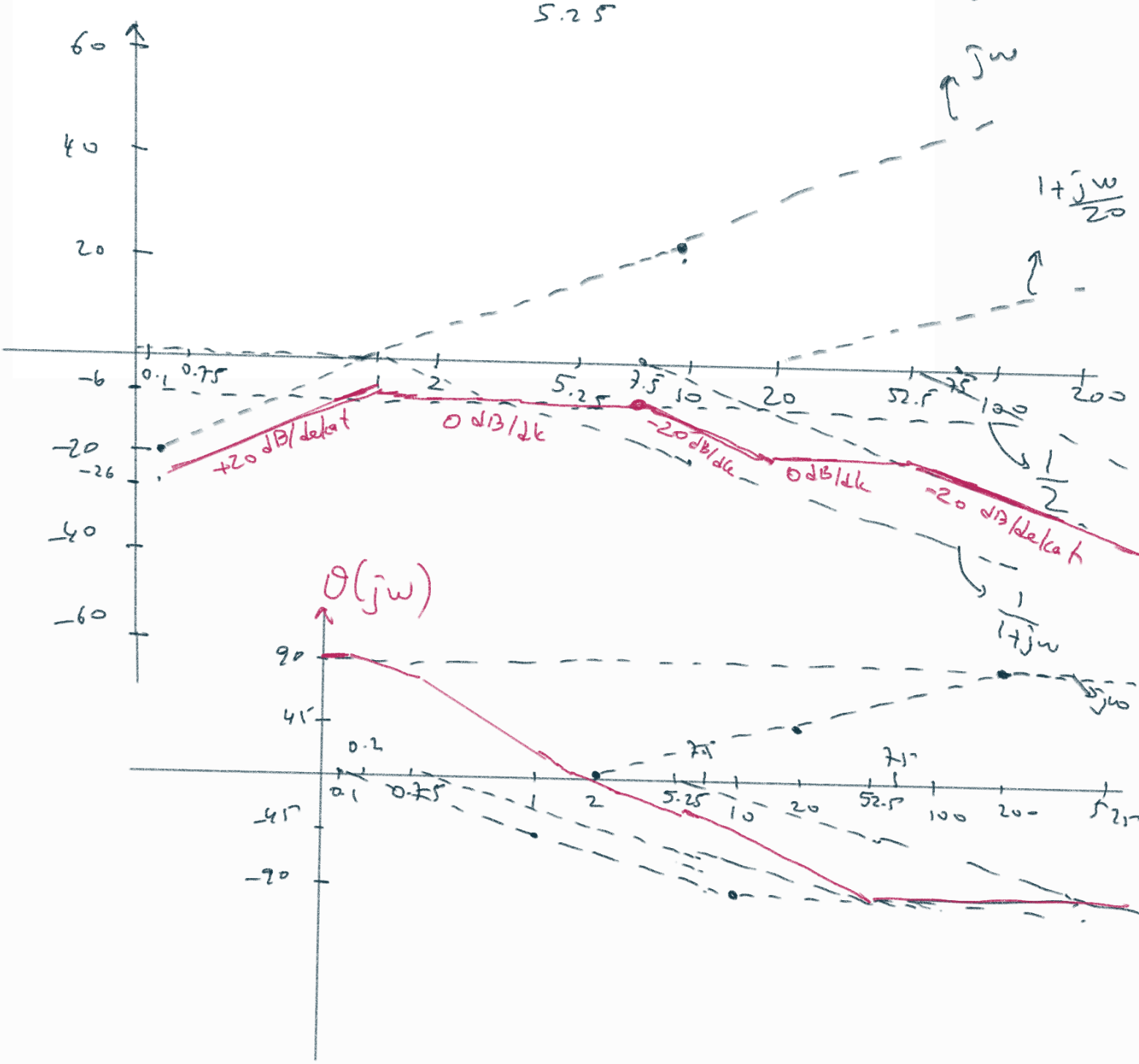

14.22 Find the transfer function $\mathbf{H}(\omega)$ with the Bode magnitude plot shown in Fig. 14.74.

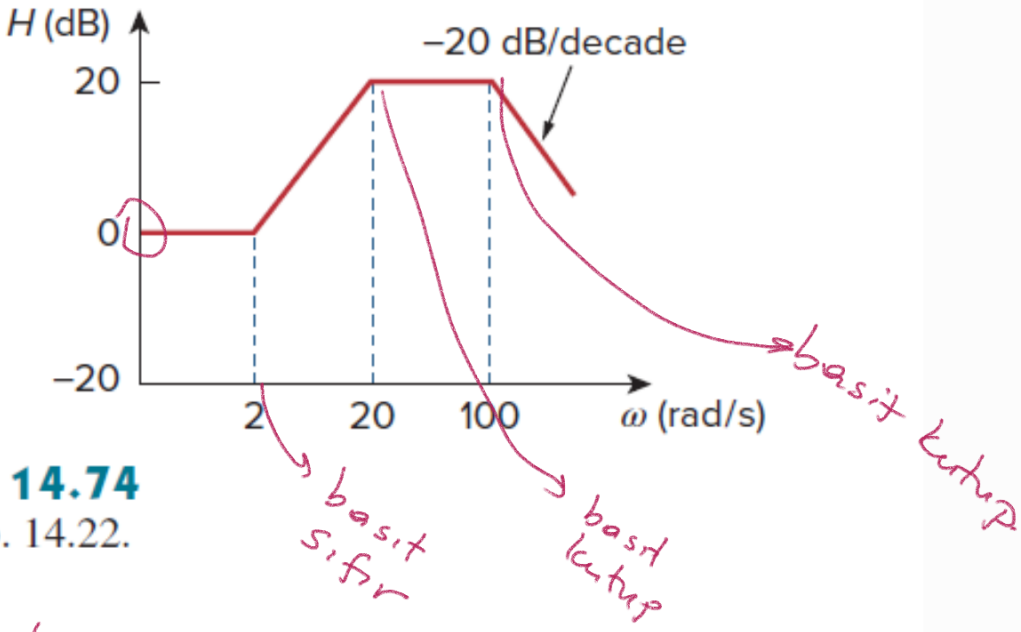

Figure 14.74
For Prob. 14.22.

$$H(j\omega) = \frac{\left(1 + \frac{j\omega}{2}\right)}{\left(1 + \frac{j\omega}{20}\right)\left(1 + \frac{j\omega}{100}\right)}$$

$$H(s) = \frac{1 + \frac{s}{2}}{\left(1 + \frac{s}{20}\right)\left(1 + \frac{s}{100}\right)} = \frac{\frac{s+2}{2}}{\left(\frac{s+20}{20}\right)\left(\frac{s+100}{100}\right)} = \frac{1000(s+2)}{(s+20)(s+100)}$$

14.50 Determine what type of filter is in Fig. 14.87. Calculate the corner frequency f_c.

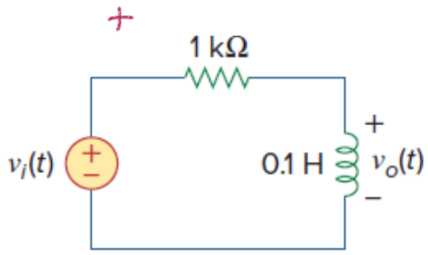

Figure 14.87
For Prob. 14.50.

$\omega \to \infty \Rightarrow V_o \to V_i$

$\omega \to 0 \Rightarrow V_o \to 0$

HPF

Yüksek geçirgen filtre.

$$V_o = V_i \frac{j\omega L}{R + j\omega L}$$

$$\frac{V_o}{V_i} = H(j\omega) = \frac{j\omega L}{R + j\omega L}$$

$H_{max} = \max |H(j\omega)| = 1$

kesim frekans, ω_c

$$|H(j\omega_c)| = \frac{H_{max}}{\sqrt{2}} = \frac{1}{\sqrt{2}}$$

$$\left| \frac{j\omega L}{R + j\omega L} \right| = \frac{1}{\sqrt{2}}$$

$$\frac{\omega L}{\sqrt{R^2 + \omega^2 L^2}} = \frac{1}{\sqrt{2}} \Rightarrow \cancel{2}\omega^2 L^2 = R^2 + \cancel{\omega^2 L^2}$$

$$\omega^2 L^2 = R^2$$

$$\boxed{\omega_c = \frac{R}{L}} = \frac{1k\Omega}{0.1H} = 10000 \text{ rad/sn}$$

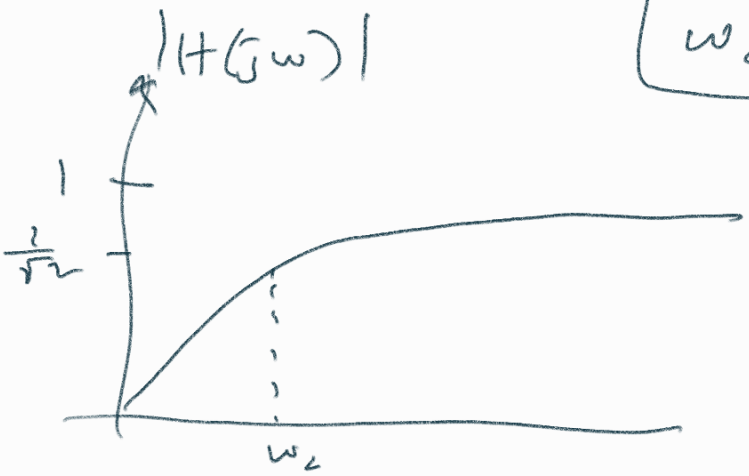

$$f_c = \frac{\omega_c}{2\pi} = \frac{5000}{\pi}$$

14.57 Determine the center frequency and bandwidth of the band-pass filters in Fig. 14.88.

$$\frac{1}{j\omega C} = \frac{1}{j\omega}$$

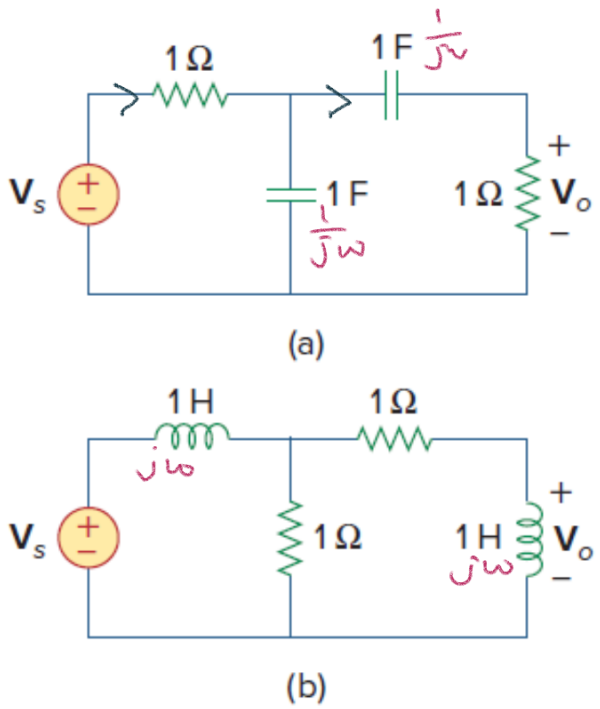

Figure 14.88
For Prob. 14.57.

(a) $$V_o = 1 \times \frac{\frac{1}{j\omega}}{1+\frac{2}{j\omega}} \times \frac{V_s}{1+\left(\frac{1}{j\omega} \parallel \left(1+\frac{1}{j\omega}\right)\right)}$$

$$\bar{V}_o = \frac{1}{2+j\omega} \frac{\bar{V}_s}{1+\frac{\frac{1}{j\omega}\left(1+\frac{1}{j\omega}\right)}{\frac{2}{j\omega}+1}}$$

$$= \frac{1}{2+j\omega} \frac{V_s}{1+\frac{1+j\omega}{\frac{(j\omega)(j\omega)}{\frac{2+j\omega}{j\omega}}}} = \frac{V_s}{2+j\omega} \frac{1}{1+\frac{1+j\omega}{(j\omega)(2+j\omega)}}$$

$$V_o = \frac{V_s}{\cancel{2+j\omega}} \frac{(j\omega)\cancel{(2+j\omega)}}{j\omega(2+j\omega)+1+j\omega)}$$

$$\frac{V_o}{V_s} = \frac{j\omega}{j2\omega-\omega^2+1+j\omega} = \frac{j\omega}{1+j3\omega-\omega^2} = H(j\omega)$$

$$|H(j\omega)| = \frac{\omega}{\sqrt{(1-\omega^2)^2+9\omega^2}}$$

$\boxed{H_{max} = 1/3}$ $\boxed{\omega_0 = 1 \text{ Hz}}$ merkez frekans,

$$\frac{H_{max}}{\sqrt{2}} = \frac{1}{3\sqrt{2}} = \frac{\omega_c}{\sqrt{(1-\omega_c^2)^2+9\omega_c^2}}$$

$$(1-\omega_c^2)^2 + \cancel{9\omega_c^2} = \cancel{18\omega_c^2} \quad 9\omega_c^2$$

$$1-\omega_c^2 = \mp 3\omega_c$$

$$0 = \omega_c^2 \mp 3\omega_c - 1$$

$$\frac{\mp 3 \mp \sqrt{13}}{2}$$

$-$ olamaz

$$\omega_{c_{1,2}} = \frac{\mp 3 + \sqrt{13}}{2} = \left(\frac{\sqrt{13} - 3}{2}, \frac{\sqrt{13} + 3}{2} \right)$$

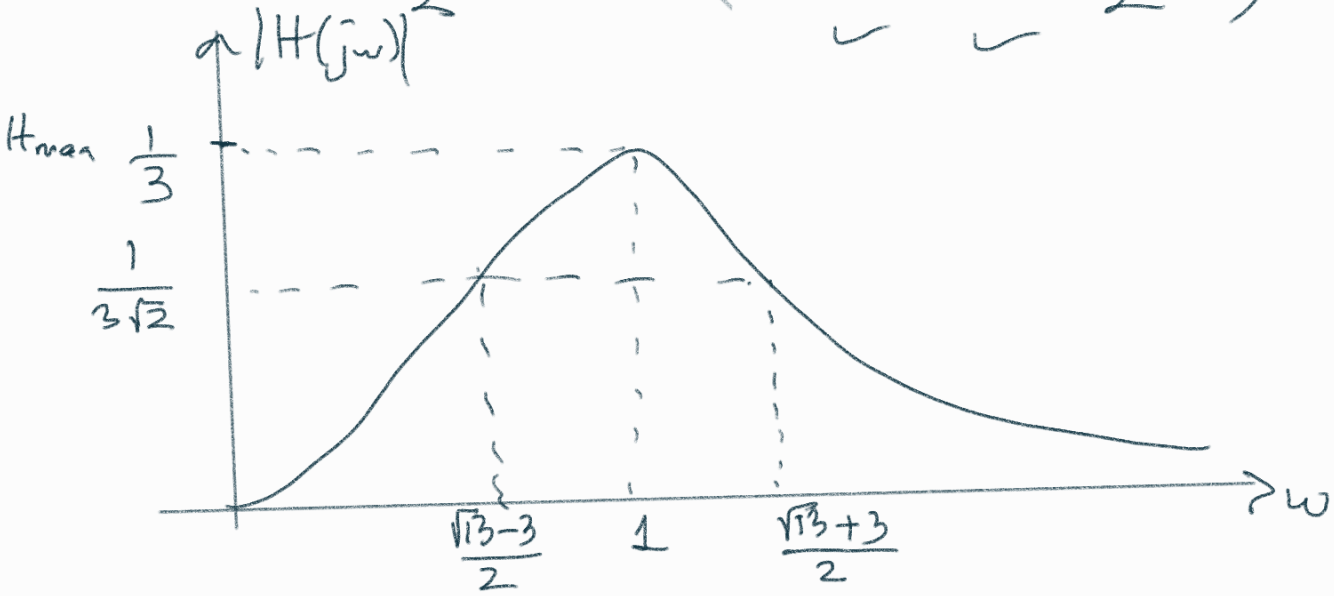

$$\omega_{c_1} \omega_{c_2} = \frac{13 - 9}{4} = 1 = \omega_0^2$$

$$\boxed{\omega_{c_1} \omega_{c_2} = \omega_0^2}$$

14.61 Find the transfer function for each of the active filters in Fig. 14.90.

$$V_o = V_i \frac{\frac{1}{j\omega C}}{R + \frac{1}{j\omega C}}$$

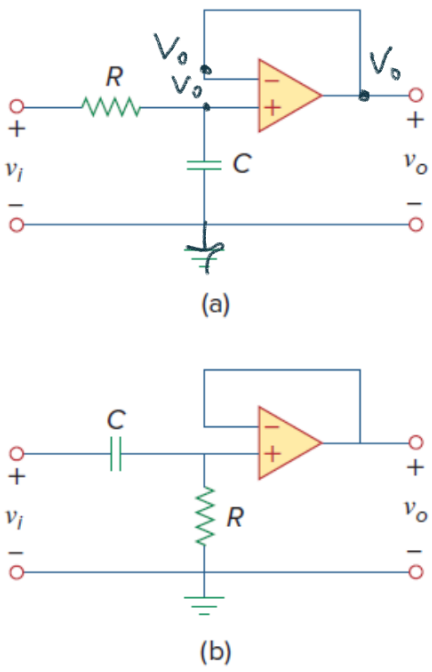

$$H(j\omega) = \frac{1}{1 + j\omega RC}$$

$$|H| = \frac{1}{\sqrt{1 + \omega^2 R^2 C^2}}$$

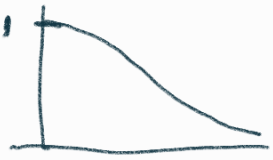

$$H(j\omega) = \frac{R}{R + \frac{1}{j\omega C}} = \frac{j\omega RC}{1 + j\omega RC}$$

$$|H(j\omega)| = \frac{\omega RC}{\sqrt{1 + \omega^2 R^2 C^2}}$$

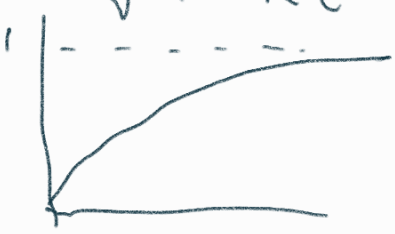

Figure 14.90
For Probs. 14.61 and 14.62.

14.69 Design the filter in Fig. 14.94 to meet the following requirements:

(a) It must attenuate a signal at 2 kHz by 3 dB compared with its value at 10 MHz.

(b) It must provide a steady-state output of $v_o(t) = 10\sin(2\pi \times 10^8 t + 180°)$ V for an input $v_s(t) = 4\sin(2\pi \times 10^8 t)$ V.

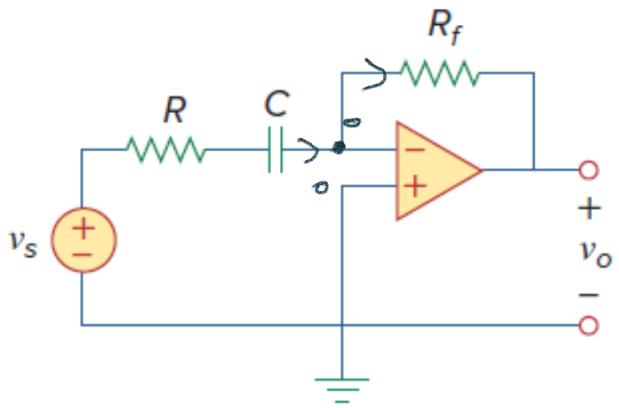

Figure 14.94
For Prob. 14.69.

a)

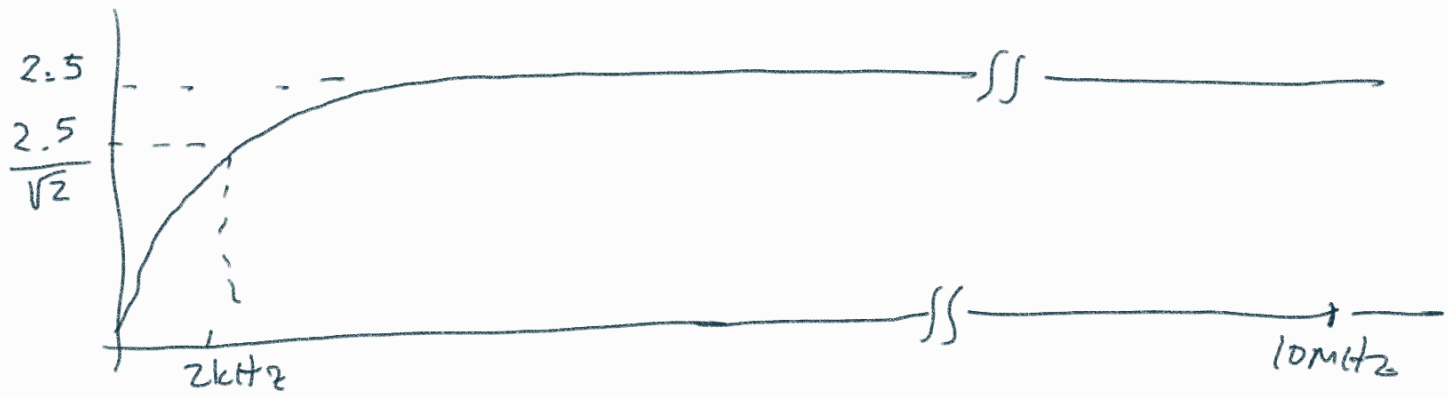

b) $\frac{-R_f}{R} = 2.5$ (1)

(2) kesin fr. $\frac{-R_f}{R + \frac{1}{j\omega C}} = \frac{-j\omega R_f C}{1 + j\omega R C}$

$= \underbrace{\frac{-j\omega RC}{1 + j\omega RC}}_{} \frac{R_f}{R}$ → 2.5

$\omega_c = \frac{1}{RC} = 2\pi \times 2000$

$Q = \frac{\omega_0}{B}$ Quality factor

14.18 For the bandpass filter shown in Fig. P14.18, find (a) ω_o, (b) f_o, (c) Q, (d) ω_{c1}, (e) f_{c1}, (f) ω_{c2}, (g) f_{c2}, and (h) β. $\rightarrow \omega_{c2} - \omega_{c1}$

PSPICE MULTISIM

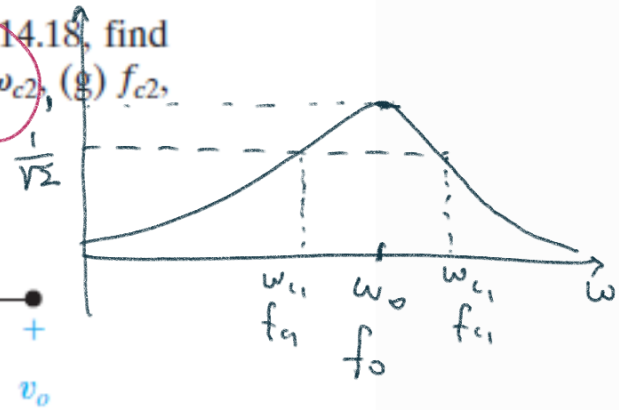

Figure P14.18

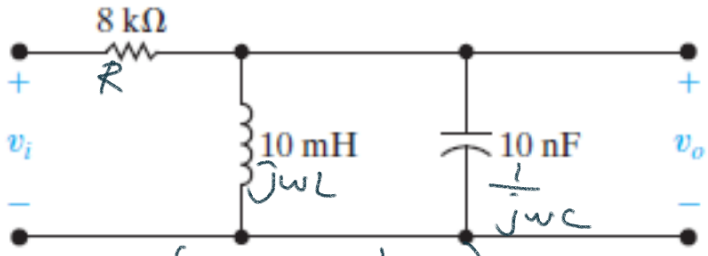

$$V_o = V_i \frac{\left(j\omega L \,//\, \frac{1}{j\omega C}\right)}{R + \left(j\omega L \,//\, \frac{1}{j\omega C}\right)}$$

$$H(j\omega) = \frac{V_o}{V_i} = \frac{\dfrac{\frac{j\omega L}{j\omega C}}{j\omega L + \frac{1}{j\omega C}}}{R + \dfrac{\frac{j\omega L}{j\omega C}}{j\omega L + \frac{1}{j\omega C}}} = \frac{\dfrac{j\omega L}{1-\omega^2 LC}}{R + \dfrac{j\omega L}{1-\omega^2 LC}}$$

$$H(j\omega) = \frac{j\omega L}{R - \omega^2 RLC + j\omega L} = \frac{j\omega \frac{L}{R}}{1-\omega^2 LC + j\omega \frac{L}{R}}$$

$\omega_0 = \frac{1}{\sqrt{LC}}$ merkez frekansı $\left(\omega_0 = \frac{1}{\sqrt{10^{-2} \times 10^{-8}}} = 10^5 \text{ rad/sn}\right)$

$f_0 = \frac{10^5}{2\pi} \simeq 15900 \text{ Hz}$

$$|H(j\omega)| = \frac{\omega \frac{L}{R}}{\sqrt{(1-\omega^2 LC)^2 + \frac{\omega^2 L^2}{R^2}}}$$

$H_{max} = 1 \Rightarrow |H(j\omega_c)| = \frac{1}{\sqrt{2}}$

$$\frac{\omega_c \frac{L}{R}}{\sqrt{(1-\omega_c^2 LC)^2 + \frac{\omega_c^2 L^2}{R^2}}} = \frac{1}{\sqrt{2}}$$

$$\cancel{2}\omega_c^2 \frac{L^2}{R^2} = 1 - 2\omega_c^2 LC + \omega_c^4 L^2 C^2 + \cancel{\omega_c^2 \frac{L^2}{R^2}}$$

$$0 = \omega_c^4 L^2 C^2 - 2\omega_c^2 LC - \omega_c^2 \frac{L^2}{R^2} + 1$$

$$\boxed{0 = A^2 L^2 C^2 - A\left(2LC + \frac{L^2}{R^2}\right) + 1}$$

$$\frac{2LC + \frac{L^2}{R^2} \mp \sqrt{\left(2LC + \frac{L^2}{R^2}\right)^2 - 4L^2C^2}}{2L^2C^2} = (\omega_{c_1}, \omega_{c_2})$$

$$0 = \omega_c^4 10^{-20} - \omega_c^2\left(2\times10^{-10} + \frac{10^{-4}}{64\times10^6}\right) + 1$$

$$= \omega_c^4 - \omega_c^2\left(2.015625\times10^{+10}\right) + 10^{20}$$

$$= A^2 - 2.015625\times10^{+10} A + 10^{20}$$

$$= \frac{2.015625\times10^{10} \mp \sqrt{2.015625^2\times10^{20} - 4\times10^{20}}}{2}$$

$$= \frac{2.015625\times10^{10} \mp \sqrt{0.06274}\times10^{10}}{2}$$

$$A_{1,2} = \left(\frac{1.75\times10^{10}}{2}, \frac{2.25\times10^{10}}{2}\right) = 0.875\times10^{10}, 1.125\times10^{10}\ \frac{rad}{sn}$$

$$\omega_{c_{1,2}} = \left(0.935\times10^5, 1.061\times10^5\right)\ rad/sn$$

$$f_{c_{1,2}} = (14888, 16894)\ Hz$$

$$\beta = \omega_{c_2} - \omega_{c_1} = 0.126\times10^5 \cong 12600\ rad/sn$$

$$Q = \frac{\omega_0}{\beta} = \frac{10^5}{12600} \cong 7.94$$

14.27 Use a 5 nF capacitor to design a series *RLC* band-pass filter as shown at the top of Fig. 14.27. The center frequency of the filter is 8 kHz, and the quality factor is 2.

DESIGN PROBLEM
PSPICE
MULTISIM

a) Specify the values of R and L.

b) What is the lower cutoff frequency in kilohertz?

c) What is the upper cutoff frequency in kilohertz?

d) What is the bandwidth of the filter in kilohertz?

14.28 Design a series *RLC* bandpass filter using only

$$\omega_0 = \frac{1}{\sqrt{LC}} = 16000\pi$$

$$\boxed{\begin{aligned} \omega_{c_1} &= -\frac{R}{2L} + \sqrt{\left(\frac{R}{2L}\right)^2 + \frac{1}{LC}} \\ \omega_{c_2} &= +\frac{R}{2L} + \sqrt{\left(\frac{R}{2L}\right)^2 + \frac{1}{LC}} \end{aligned}}$$

$$\beta = \omega_{c_2} - \omega_{c_1} = \frac{R}{L}$$

$$Q = \frac{\omega_0}{\beta} = 2$$

C = 5nF kullan.

$$2 = \frac{\frac{1}{\sqrt{LC}}}{\frac{R}{L}} = \frac{1}{\sqrt{LC}}\,\frac{L}{R} = \frac{1}{R}\sqrt{\frac{L}{C}} = 2$$

$$\frac{1}{\sqrt{LC}} = 16000\pi$$

$$\frac{1}{L \times 5\times10^{-9}} = 256\times10^{6}\pi^2$$

$$L = \frac{1000}{5\times256\times\pi^2} = 79\,\text{mH}$$

$$\frac{1}{R}\sqrt{\frac{79\times10^{-3}}{5\times10^{-9}}} = 2$$

$$R \simeq \frac{4\times10^{3}}{2} = 2\,\text{k}\Omega$$

d) $\beta = \frac{R}{L} = \frac{2000}{79\times10^{-3}} = \frac{1}{40}\times10^{6} = 25000$ rad/sn

$\beta = \frac{25000}{2\pi}$ Hz

b) $\omega_{c_1} = -\frac{R}{2L} + \sqrt{\left(\frac{R}{2L}\right)^2 + \frac{1}{LC}}$

$= -12500 + \sqrt{12500^2 + 25\times10^6\pi^2}$

$\omega_{c_1} = -12500 + 51760 = 39260$ rad/sn $= 6252$ Hz

c) $\omega_{c_2} = +12500 + 51760 = 64260$ rad/sn $= 10232$ Hz

14.32 A block diagram of a system consisting of a sinusoidal voltage source, an *RLC* series bandpass filter, and a load is shown in Fig. P14.32. The internal impedance of the sinusoidal source is $80 + j0\ \Omega$, and the impedance of the load is $480 + j0\ \Omega$.

The *RLC* series bandpass filter has a 20 nF capacitor, a center frequency of 50 krad/s, and a quality factor of 6.25.

a) Draw a circuit diagram of the system.

b) Specify the numerical values of L and R for the filter section of the system.

c) What is the quality factor of the interconnected system?

d) What is the bandwidth (in hertz) of the interconnected system?

Figure P14.32

b) $\omega_0 = \frac{1}{\sqrt{LC}} = 50000$

$Q = \frac{\omega_0}{\beta} = 6.25$

$\beta = \frac{50000}{6.25} = 8000$ rad/sn $= \frac{R}{L}$

$L = \frac{1}{50000^2\times20\times10^{-9}} = \frac{1}{25\times20\times10^{-1}} = 0.02$ H

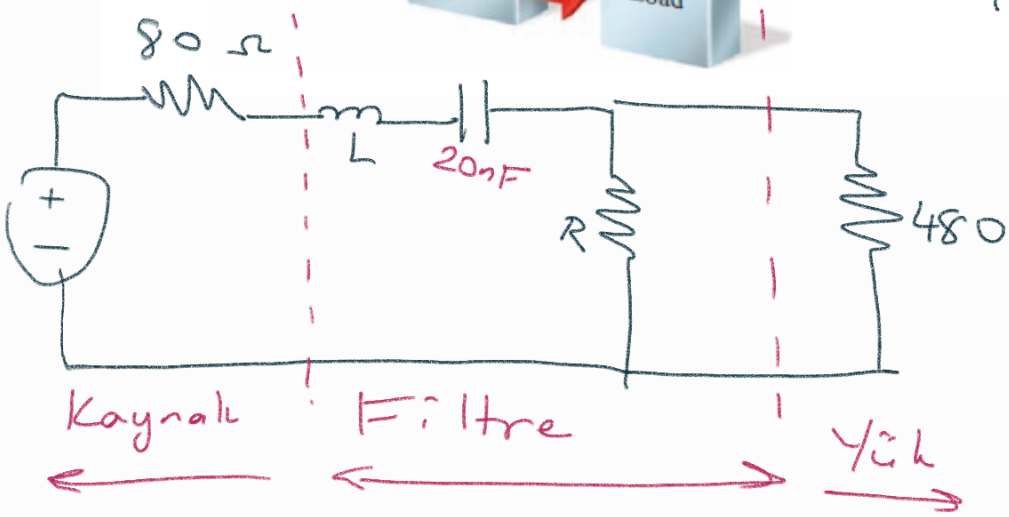

$$8000 = \frac{R}{0.02} \Rightarrow R = 160\,\Omega$$

c) Interconnected System

$160 // 480$

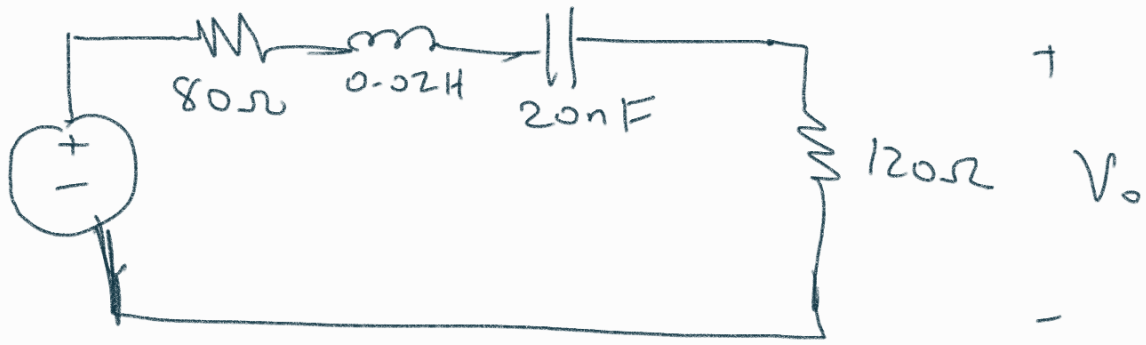

$$H(j\omega) = \frac{120}{200 + j0.02\omega + \frac{1}{j2\times10^{-8}\,\omega}}$$

$$H(j\omega) = \frac{120}{200 + j\underbrace{\left(0.02\omega - \frac{1}{2\times10^{-8}\omega}\right)}}$$

Bunun sifir olduğu yer merkez frekansıdır.

$$\omega_o = \frac{1}{\sqrt{0.02\times2\times10^{-8}}} = \frac{1}{\sqrt{4\times10^{-10}}} = 5\times10^{4} = 50000\,\frac{rad}{sn}$$

AYNI.

$$\boxed{H_{max} = 0.6}$$

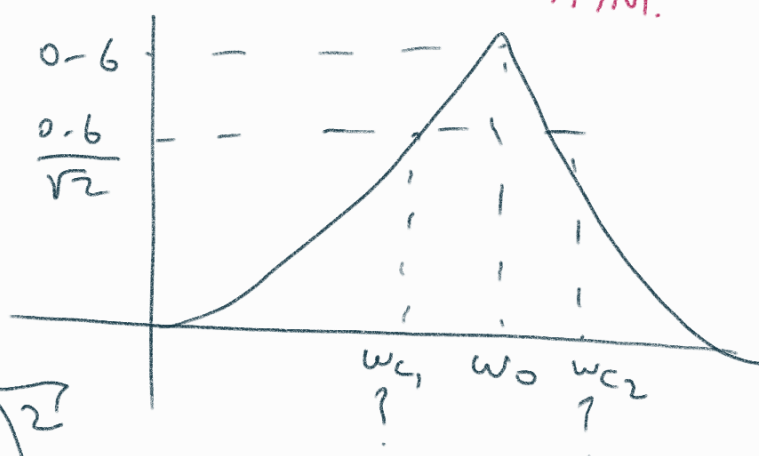

$$|H(j\omega_c)| = \frac{0.6}{\sqrt{2}}$$

?

$$|H(j\omega)| = \frac{120}{\sqrt{200^2 + \left(0.02\omega - \frac{1}{2\times10^{-8}\omega}\right)^2}}$$

$$\frac{14400}{40000 + \left(0.02\omega - \frac{1}{2\times10^{-8}\omega}\right)^2} = \frac{0.36}{2}$$

$$\cancel{28800} = \cancel{14400} + 0.36\left(4\times10^{-4}\omega^2 - \frac{0.04}{2\times10^{-8}} + \frac{1}{4\times10^{-16}\omega^2}\right)$$

14400

$$40000 = 4\times10^{-4}\omega^2 - 2\times10^{6} + \frac{25\times10^{14}}{\omega^2}$$

$$40000\omega^2 = 4\times10^{-4}\omega^4 - 2\times10^{6}\omega^2 + 25\times10^{14}$$

$$0 = 4\times10^{-4}\omega^4 - (2\times10^{6} + 40000)\omega^2 + 25\times10^{14}$$

$$= \omega^4 - (0.5\times10^{10} + \cancel{10^{8}})\omega^2 + 6.25\times10^{18}$$

$$= \omega^4 - 51\times10^{8}\omega^2 + 6.25\times10^{18}$$

$$0 = A^2 - 51\times10^{8}A + 6.25\times10^{18}$$

$$A = \frac{51\times10^{8} \mp \sqrt{51^2\times10^{16} - 25\times10^{18}}}{2}$$

$$A_{1,2} = \frac{51\times10^{8} \mp 10.5\times10^{8}}{2}$$

$$A_{1,2} = 20.25\times10^{8},\ 30.75\times10^{8}$$

$$\omega_{c_{1,2}} = (45000,\ 55452)\ \text{rad/sn}$$

$$\beta = 10452\ \text{rad/sn} \Longrightarrow 1664\ \text{Hz}$$

$$Q = \frac{\omega_0}{\beta} = \frac{50000}{10452} = 4.78$$ DÜŞTÜ

14.42 Use a 500 nF capacitor to design a bandreject filter, as shown in Fig. P14.42. The filter has a center frequency of 4 kHz and a quality factor of 5.

DESIGN PROBLEM | PSPICE | MULTISIM

a) Specify the numerical values of R and L.

b) Calculate the upper and lower corner, or cutoff, frequencies in kilohertz.

c) Calculate the filter bandwidth in kilohertz. 0.8 kHz

Figure P14.42

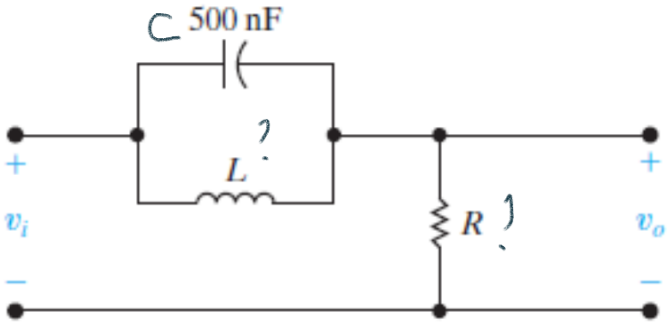

$$H(j\omega) = \frac{R}{R + \left(j\omega L \,//\, \frac{1}{j\omega C}\right)}$$

$$= \frac{R}{R + \dfrac{\frac{j\omega L}{j\omega C}}{j\omega L + \frac{1}{j\omega C}}} = \frac{R}{R + \dfrac{j\omega L}{1-\omega^2 LC}}$$

$$H(j\omega) = \frac{R(1-\omega^2 LC)}{R(1-\omega^2 LC) + j\omega L} = \frac{1-\omega^2 LC}{1-\omega^2 LC + j\omega \frac{L}{R}}$$

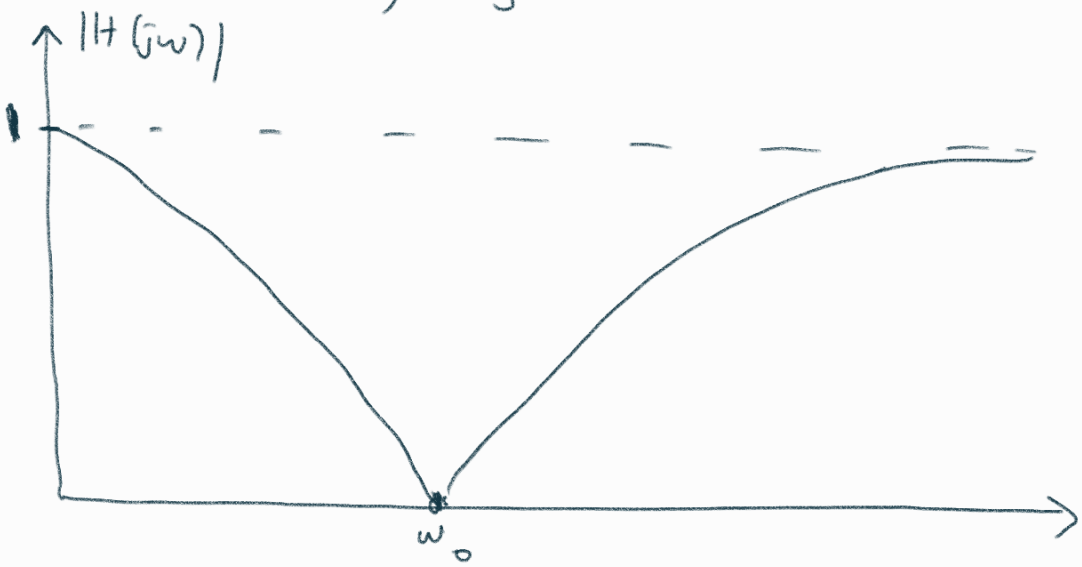

$$\omega_0 = \frac{1}{\sqrt{LC}} = 8000\pi \longrightarrow 4kHz$$

$$8000\pi = \frac{1}{\sqrt{5\times10^{-7}\, L}}$$

$$L = \frac{1}{64\pi^2\times10^6\times5\times10^{-7}} \cong 3.2mH$$

olmalı

$$Q = \frac{\omega_0}{\beta} = 5$$

$$\beta = \frac{\omega_0}{5} = 1600\pi \ rad/sn$$

$$\frac{1}{\sqrt{2}} = \frac{1-\omega^2LC}{\sqrt{(1-\omega^2LC)^2 + \frac{\omega^2L^2}{R^2}}}$$

$$\cancel{(1-\omega^2LC)^2} + \omega^2\frac{L^2}{R^2} = \cancel{2}(1-\omega^2LC)^2$$

$$\omega^2\frac{L^2}{R^2} = 1 + \omega^4L^2C^2 - 2\omega^2LC$$

$$\omega^4L^2C^2 - \omega^2\left(\frac{L^2}{R^2} + 2LC\right) + 1 = 0$$

$$\omega^4 - \omega^2\left(\frac{1}{R^2C^2} + \frac{2}{LC}\right) + \frac{1}{L^2C^2} = 0$$

$$A^2 - A\left(\frac{1}{R^2C^2} + \frac{2}{LC}\right) + \frac{1}{L^2C^2} = 0$$

$$A = \frac{\frac{1}{R^2C^2} + \frac{2}{LC} \mp \sqrt{\left(\frac{1}{R^2C^2} + \frac{2}{LC}\right)^2 - \frac{4}{L^2C^2}}}{2}$$

$$\omega^2_{c_{1,2}} = \frac{\frac{1}{R^2C^2} + \frac{2}{LC} \mp \sqrt{\frac{1}{R^4C^4} + \frac{4}{LC}}}{2} = 7240\pi$$

$$\omega_0 = 8000\pi = \sqrt{\omega_{c_1}\omega_{c_2}}$$

$$\omega_{c_2} - \omega_{c_1} = 1600\pi$$

$$64\times10^6\pi^2 = \omega_{c_1}(1600\pi + \omega_{c_1})$$

$$0 = \omega_{c_1}^2 + 1600\pi\,\omega_{c_1} - 64\times10^6\pi^2$$

$$\omega_{c_1} = \frac{-1600\pi \mp \sqrt{(1600\pi)^2 + 256\times10^6\pi^2}}{2}$$

$$\omega_{c_1} = \frac{\sqrt{256+2.56}\times10^3\pi - 1.6\times10^3\pi}{2}$$

$$\omega_{c_1} \simeq \frac{14.48\times10^3\pi}{2} = 7.24\times10^3\pi$$

$$\omega_{c_2} = 1600\pi + 7240\pi = 8840\pi$$

c) $\beta = 1600\pi$ rad/s $\Rightarrow$ 800 Hz

14.48 Given the following voltage transfer function:

$$H(s) = \frac{V_o}{V_i}$$

$$= \frac{25\times10^6}{s^2 + 1000s + 25\times10^6}.$$

a) At what frequencies (in radians per second) is the magnitude of the transfer function equal to unity?

b) At what frequency is the magnitude of the transfer function maximum?

c) What is the maximum value of the transfer function magnitude? $\Rightarrow$ 1

a) $$H(j\omega) = \frac{25\times10^6}{j1000\omega + 25\times10^6 - \omega^2}$$

$$|H(j\omega)| = \frac{25\times10^6}{\sqrt{(25\times10^6-\omega^2)^2 + 10^6\omega^2}} = 1$$

$\omega = 0$ olduğunda $|H(j\omega)| = 1$

$$(25\times10^6)^2 = (25\times10^6 - \omega^2)^2 + 10^6\omega^2$$

$$\cancel{(25\times10^6)^2} = \cancel{(25\times10^6)^2} - 50\times10^6\omega^2 + \omega^4 + 10^6\omega^2$$

$$0 = \omega^4 - 49\times10^6\omega^2$$

$$0 = \omega^2(\omega^2 - 49\times10^6)$$

$\omega = 0$
$\omega = 7\times10^3$) Bu iki frekansta $|H| = 1$ olur.

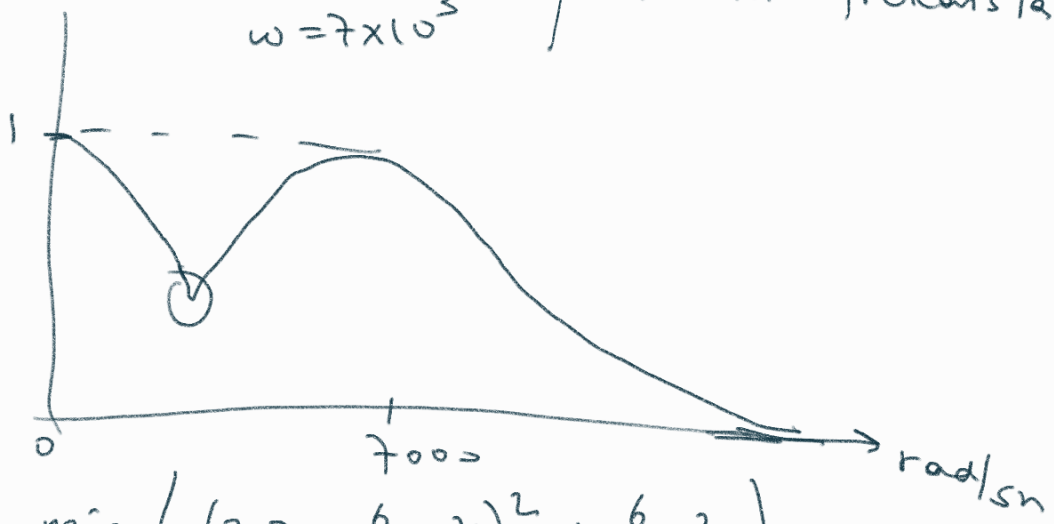

b) $\min\left((25\times10^6 - \omega^2)^2 + 10^6\omega^2\right)$

$$\Rightarrow 2(25\times10^6 - \omega^2)(-2\omega) + 2\times10^6\omega = 0$$

$$\omega\left[-4(25\times10^6 - \omega^2) + 2\times10^6\right] = 0$$

$$-98\times10^6 + 4\omega^2 = 0$$

$$\frac{49}{2}\times10^6 = \omega^2$$

15.44 DESIGN PROBLEM a) Design a broadband Butterworth bandpass filter with a lower cutoff frequency of 200 Hz and an upper cutoff frequency of 2500 Hz. The passband gain of the filter is 40 dB. The gain should be down at least 40 dB at 40 Hz and 12.5 kHz. Use 1 μF capacitors in the high-pass circuit and 2.5 kΩ resistors in the low-pass circuit.

b) Draw a circuit diagram of the filter and label all the components.

AKTİF FİLTRELER

1. DERECE ALÇAK GEÇİRGEN:

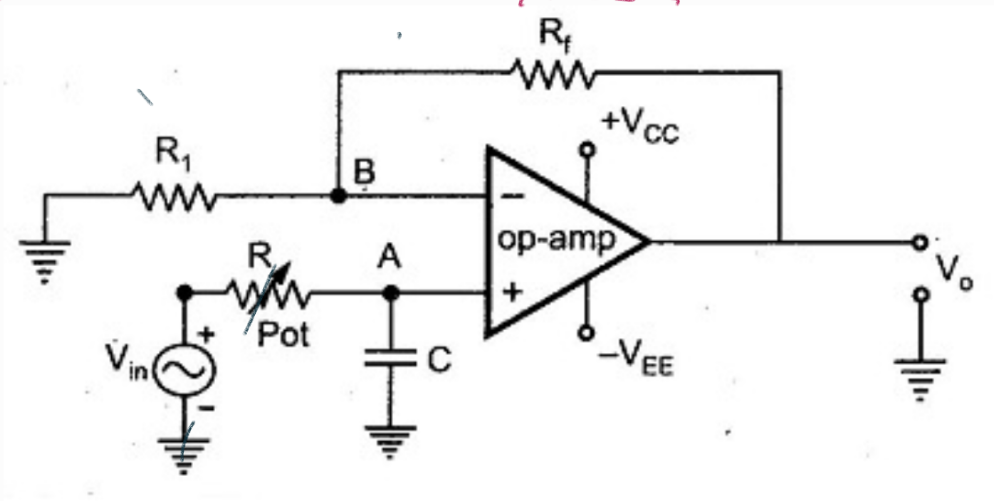

Fig. 2.74 First order low pass butterworth filter

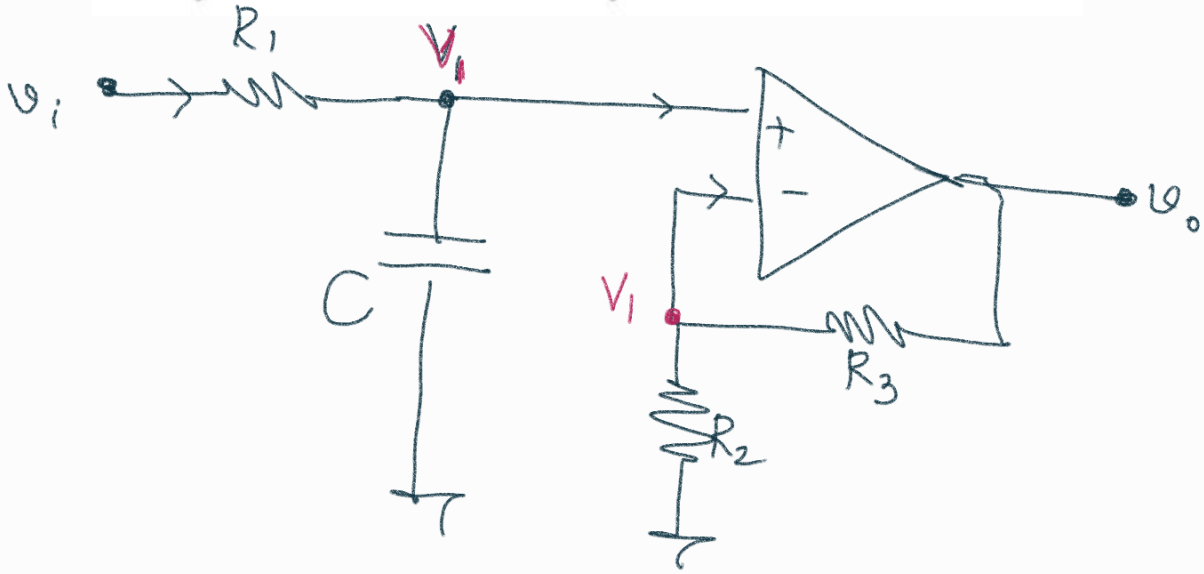

① $\dfrac{V_i - V_1}{R_1} = \dfrac{V_1}{1/j\omega C}$ ② $\dfrac{V_1}{R_2} = \dfrac{V_o}{R_2+R_3}$

① $\dfrac{V_i}{R_1} = \dfrac{V_1}{R_1} + V_1 j\omega C \Rightarrow \dfrac{V_i}{R_1} = V_1\left(\dfrac{1}{R_1} + j\omega C\right)$

$$V_1 = \frac{V_i}{R_1\left(\frac{1}{R_1} + j\omega C\right)}$$

② $$\frac{V_i}{R_2 R_1\left(\frac{1}{R_1} + j\omega C\right)} = \frac{V_o}{R_2+R_3}$$

$$V_o = \frac{R_2+R_3}{R_2} \times \frac{1}{1+j\omega R_1 C} \times V_i$$

$$\boxed{H(j\omega) = \frac{R_2+R_3}{R_2} \times \frac{1}{1+j\omega R_1 C} = \frac{R_2+R_3}{R_2} \times \frac{\frac{1}{R_1 C}}{\frac{1}{R_1 C}+j\omega}}$$

Genel Form: $H = K \dfrac{b\,\omega_c}{s+b\,\omega_c}$

$\left[\omega_c = \frac{1}{R_1 C}\right]$ $\left[K = \frac{R_2+R_3}{R_2}\right]$ $\left(b=1\right)$

1. DERECE YÜKSEK GEÇİRGEN:

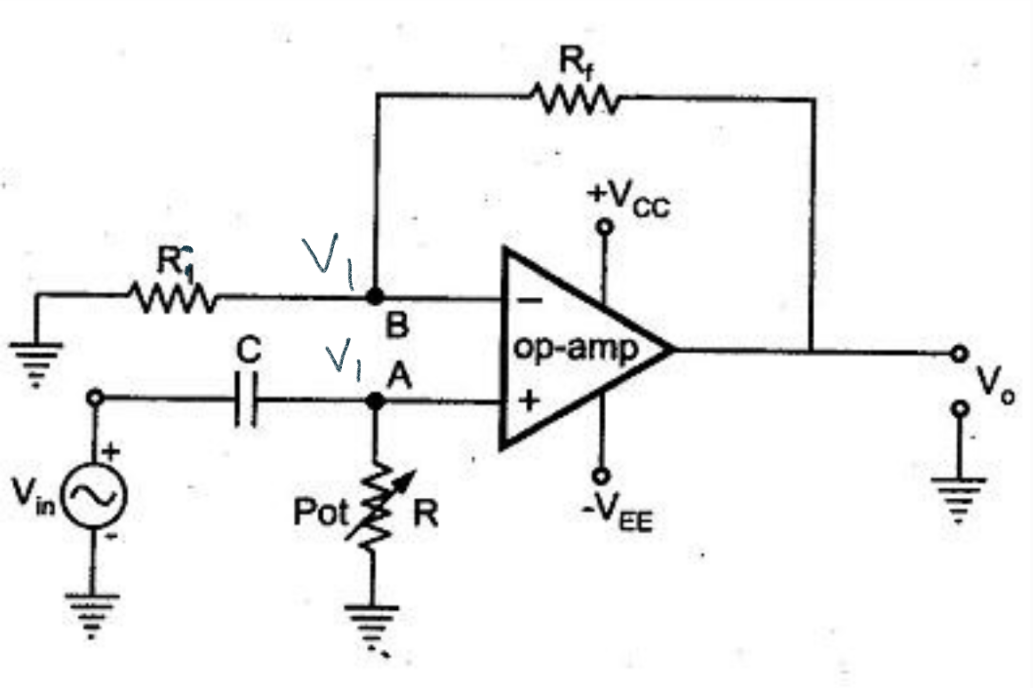

Fig. 2.79 First order high pass Butterworth filter

(1) $$\frac{V_{in}-V_1}{1/j\omega C} = \frac{V_1}{R} \Rightarrow V_{in}\, j\omega C = V_1\left(j\omega C + \frac{1}{R}\right)$$

$$V_1 = \frac{j\omega C}{j\omega C + \frac{1}{R}} \times V_{in}$$

(2) $$\frac{V_1}{R_i} = \frac{V_o}{R_i+R_f} \Rightarrow V_o = V_1 \frac{R_i+R_f}{R_i}$$

$$(1)+(2) \Rightarrow V_o = V_{in} \frac{j\omega C}{j\omega C + \frac{1}{R}} \cdot \frac{R_i + R_f}{R_i}$$

$$H(j\omega) = \frac{j\omega RC}{j\omega RC + 1} \times \frac{R_i + R_f}{R_i}$$

$$= \frac{j\omega}{\underbrace{j\omega}_{s} + \underbrace{\frac{1}{RC}}_{\omega_c/b}} \cdot \underbrace{\frac{R_i + R_f}{R_i}}_{K}$$

$(b=1)$ Genel form: $\boxed{H(s) = K \dfrac{s}{s + \frac{\omega_c}{b}}}$

n. derece Bant Geçirgen Filtre

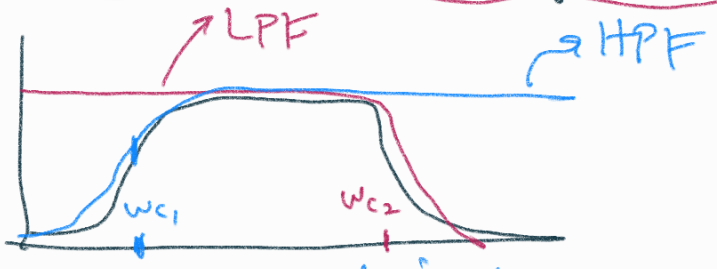

$\omega_{c_1}, \omega_{c_2}$ bandı için

BPF $(\omega_{c_1}, \omega_{c_2})$

n'inci Derece Bant Durdurma Filtre $(\omega_{c_1}, \omega_{c_2})$

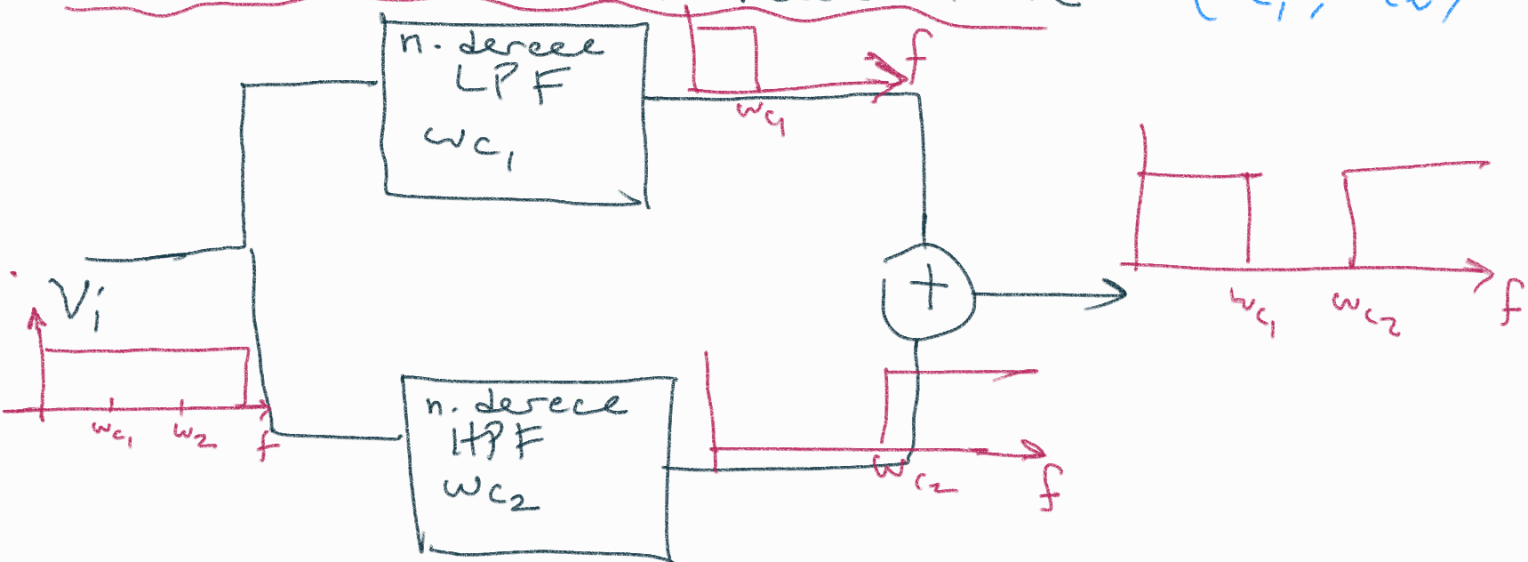

2. Derece Alçak Geçirgen Filtre

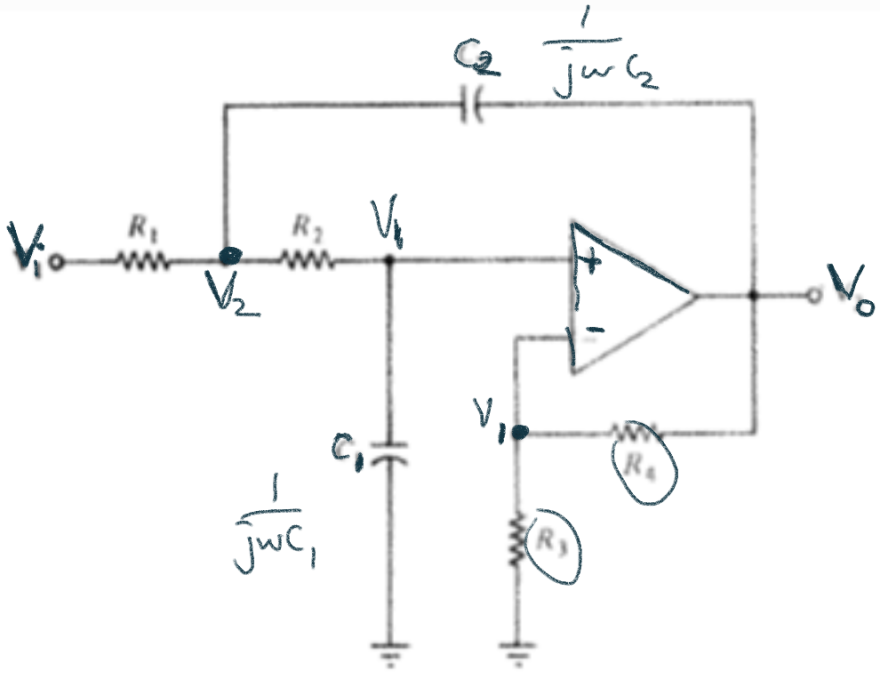

FIGURE 5.12 Second-order VCVS low-pass filter circuit.

(1) $$\frac{V_i - V_2}{R_1} = \frac{V_2 - V_o}{1/j\omega C_2} + \frac{V_2 - V_1}{R_2}$$

(2) $$\frac{V_2 - V_1}{R_2} = \frac{V_1}{1/j\omega C_1} \Rightarrow V_2 = V_1\left(\frac{1}{R_2} + j\omega C_1\right)$$

(3) $$\frac{V_1}{R_3} = \frac{V_o}{R_3 + R_4} \Rightarrow V_1 = V_o \frac{R_3}{R_3 + R_4}$$

---

(2) ve (3)'den : $$V_2 = V_o\left(\frac{R_3}{R_3 + R_4}\right)\left(\frac{1}{R_2} + j\omega C_1\right)$$

(1) $$\frac{V_i}{R_1} = V_2\left(\frac{1}{R_1} + j\omega C_2 + \frac{1}{R_2}\right) - \frac{V_1}{R_2} - V_o j\omega C_2$$

$$\frac{V_i}{R_1} = V_o \underbrace{\left(\frac{R_3}{R_3 + R_4}\right)}_{\frac{1}{K}}\left(\frac{1}{R_2} + j\omega C_1\right)\left(\frac{1}{R_1} + \frac{1}{R_2} + j\omega C_2\right) - \frac{V_o}{R_2}\underbrace{\frac{R_3}{R_3 + R_4}}_{1/K}$$

$$- V_o j\omega C_2$$

$$\frac{V_i}{R_1} = V_o\left[\frac{1}{K}\frac{1}{R_1R_2} + \frac{1}{KR_2^2} + \frac{j\omega C_2}{KR_2} + \frac{j\omega C_1}{KR_1} + \frac{j\omega C_1}{KR_2} - \frac{\omega^2 C_1C_2}{K} - \frac{1}{R_2}\frac{1}{K} - \frac{j\omega C_2 K}{K}\right]$$

$$V_i = V_o\left[\frac{1}{K}\frac{1}{R_2} + \frac{R_1}{KR_2^2} + \frac{j\omega C_2R_1}{KR_2} + \frac{j\omega C_1}{K} + \frac{j\omega C_1R_1}{KR_2} - \frac{\omega^2 C_1C_2R_1}{K} - \frac{R_1}{R_2}\frac{1}{K} - \frac{j\omega C_2R_1K}{K}\right]$$

$$\frac{V_o}{V_i} = \frac{1}{\frac{1}{K}\frac{1}{R_1} + \frac{R_1}{KR_2^2} - \frac{R_1}{R_2}\frac{1}{K} + j\omega\left(\frac{C_2R_1}{KR_2} + \frac{C_1}{K} + \frac{C_1R_1}{KR_2} - \frac{C_2R_1K}{K}\right) - \frac{\omega^2 C_1C_2R_1}{K}}$$

$$= \frac{K}{\frac{1}{R_1} + \frac{R_1}{R_2^2} - \frac{R_1}{R_2} + j\omega\left((C_2+C_1)\frac{R_1}{R_2} + C_1 - C_2R_1K\right) - \omega^2 C_1C_2R_1}$$

General Form

$$H(s) = \frac{K\,b\omega_c^2}{s^2 + a\omega_c s + b\omega_c^2}$$

$$\omega_c = \sqrt{\frac{1}{C_1C_2R_1R_2}} \qquad b = 1$$

$$H(s) = \frac{K \times \overbrace{\frac{1}{C_1C_2R_1R_2}}^{b\omega_c^2}}{s^2 + s\underbrace{\frac{(R_1+R_2)}{C_1R_1R_2}}_{a\omega_c} + \underbrace{\frac{1}{C_1C_2R_1R_2}}_{b\omega_c^2}}$$

2. Derece Yüksek Geçirgen
(R ve C yer değiştirmiş

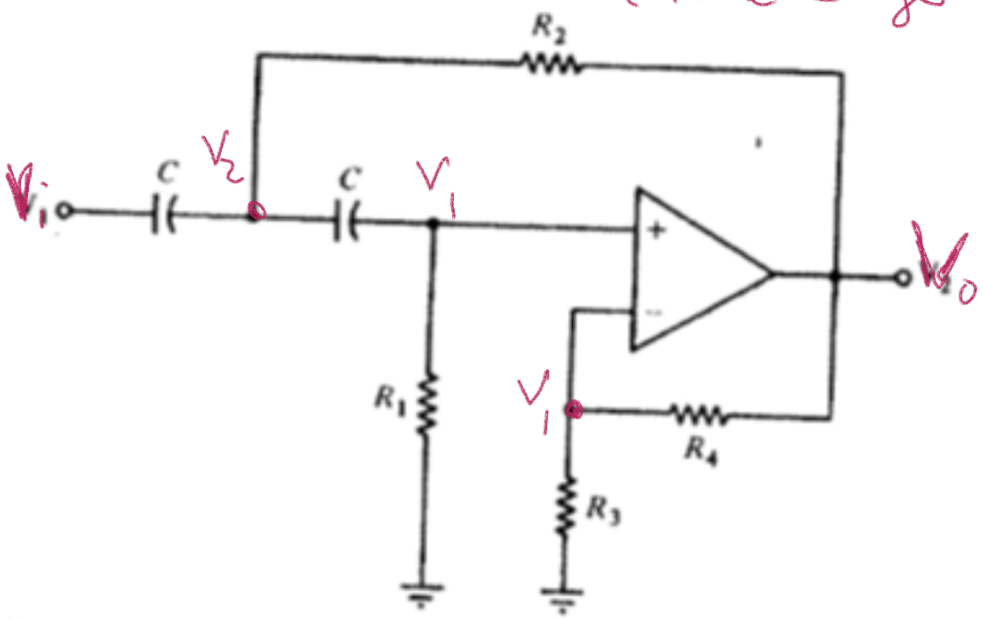

FIGURE 6.4 Second-order VCVS high-pass filter circuit.

(1) $(V_i - V_2)j\omega C = \dfrac{V_2 - V_o}{R_2} + (V_2 - V_1)j\omega C$

(2) $(V_2 - V_1)j\omega C = \dfrac{V_1}{R_1}$

(3) $\dfrac{V_1}{R_3} = \dfrac{V_o}{R_4 + R_3}$

---

(1) $V_i j\omega C = V_2\left(2j\omega C + \dfrac{1}{R_2}\right) - V_1 j\omega C - \dfrac{V_o}{R_2}$

(2) $V_2 j\omega C = V_1\left(j\omega C + \dfrac{1}{R_1}\right) \Rightarrow \boxed{V_2 = \dfrac{R_3}{R_4 + R_3} V_o\left(1 + \dfrac{1}{j\omega C R_1}\right)}$

(3) $\boxed{V_1 = \dfrac{R_3}{R_4 + R_3} V_o}$

$$V_i j\omega C = V_o\left[\frac{1}{K}\left(1 + \frac{1}{j\omega C R_1}\right)\left(2j\omega C + \frac{1}{R_2}\right) - \frac{1}{K} j\omega C - \frac{1}{R_2}\right]$$

$$V_i j\omega C = V_o\left[\frac{1}{K}\left(j2\omega C + \frac{1}{R_2} + \frac{2}{R_1} - \frac{1}{j\omega C R_1 R_2} - j\omega C\right) - \frac{1}{R_2}\right]$$

$$V_i\, j\omega C = V_o\left[\frac{1}{K}\left(j\omega C + \frac{1}{R_2} + \frac{2}{R_1} - \frac{1}{j\omega C R_1 R_2}\right) - \frac{1}{R_2}\right]$$

$\boxed{K=1}$

$$V_i\, j\omega C = V_o\left[j\omega C + \frac{2}{R_1} - \frac{1}{j\omega C R_1 R_2}\right]$$

$$\frac{V_o}{V_i} = \frac{j\omega C}{j\omega C + \frac{2}{R_1} - \frac{1}{j\omega C R_1 R_2}}$$

$$\frac{V_o}{V_i} = \frac{-\omega^2 C^2 R_1 R_2}{-\omega^2 C^2 R_1 R_2 + 2 j\omega C R_2 - 1}$$

$$H(s) = \frac{s^2 C^2 R_1 R_2}{s^2 C^2 R_1 R_2 + 2 s C R_2 - 1}$$

$$\boxed{H(s) = \frac{s^2}{s^2 + \frac{s}{R_1}\frac{C_1+C_2}{C_1 C_2} + \frac{1}{C_1 C_2 R_1 R_2}}}$$

Gerel form : $\dfrac{K s^2}{s^2 + \frac{a}{b} w_c s + \frac{w_c^2}{b}}$

(Butterworth: $b=1$)

$$\boxed{w_c = \sqrt{\frac{1}{C_1 C_2 R_1 R_2}}}$$

$$\boxed{\frac{a w_c}{b} = \frac{1}{R_1}\frac{C_1+C_2}{C_1 C_2}}$$

n	a	b
1	-	1
2	1.414214	1
3	1.000000 -	1 → 2. derece 1 → 1. derece
4	0.765367 1.847759	1 → 2. derece 1 → 2. derece
5	- 0.618 1.618	1 → 1. derece 1 → 2. 1 → 2.
6		
7		
8		

2. derece : LPF

$$\frac{\frac{1}{C_1C_2R_1R_2}}{\underbrace{\frac{1}{C_1C_2R_1R_2}}_{\omega_c^2} + s\underbrace{\frac{R_1+R_2}{C_1R_1R_2}}_{\sqrt{2}\,\omega_c} + s^2}$$

$$\frac{b\omega_c^2}{b\omega_c^2 + s\,a\omega_c + s^2}$$

$b \to 1$

2. derece HPF

$$H(s) = \frac{s^2}{\underbrace{\frac{1}{C_1C_2R_1R_2}}_{\omega_c^2} + s\underbrace{\frac{1}{R_1}\left(\frac{C_1+C_2}{C_1C_2}\right)}_{\sqrt{2}\,\omega_c} + s^2}$$

$$H(s) = \frac{s^2}{s^2 + \frac{a\omega_c}{b}s + \frac{\omega_c^2}{b}}$$

$b = 1$

$$|H(j\omega)| = \frac{A_{2p}}{\sqrt{1 + \left(\omega/\omega_c\right)^{2n}}} \qquad n = 1, 2, 3, \ldots$$

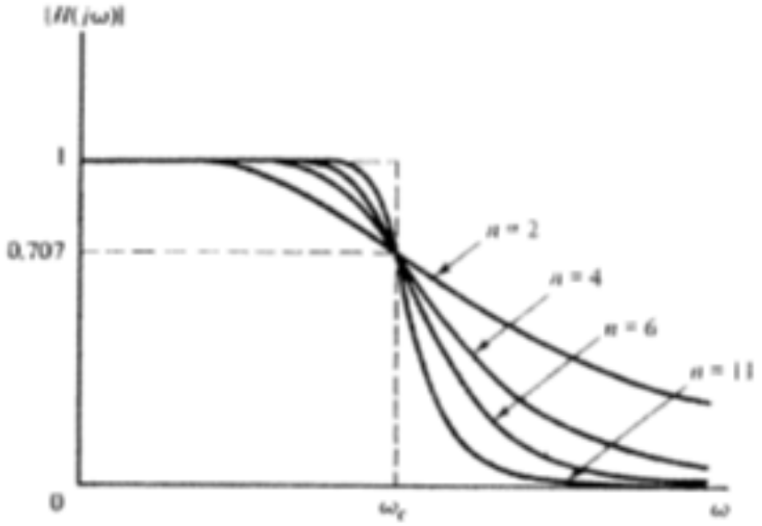

FIGURE 5.5 Low-pass Butterworth magnitudes.

Örnek: First order LPF $K=4$

$\omega_c = 1000\,Hz$

$$H(s) = K\frac{b\omega_c}{s+\omega_c b}$$

$(b=1)$

$$\boxed{\omega_c = \frac{1}{R_1 C} = 2000\pi}$$

$$\boxed{\frac{R_3+R_2}{R_2} = 4}$$

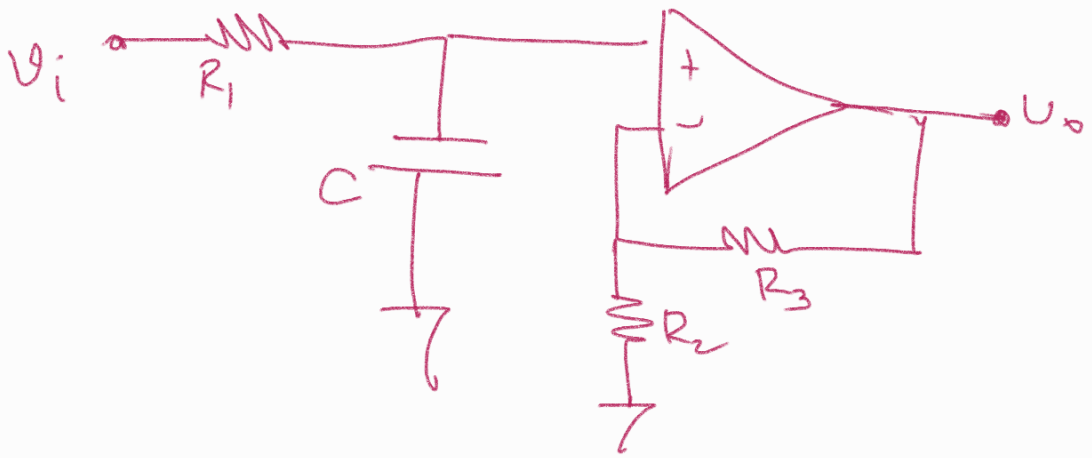

$R_1 = 1k\Omega$

$C = \frac{1}{2\pi\, 10^6} = \frac{1}{2\pi}\,\mu F$

$R_2 = 1k\Omega$ olursa

$R_3 = 3k\Omega$ olur.

2. derece LPF

$$H(s) = \frac{K b \omega_c^2}{s^2 + a\omega_c s + b\omega_c^2}$$

$$H(s) = \frac{K\frac{1}{C_1C_2R_1R_2}}{\frac{1}{C_1C_2R_1R_2} + \frac{s}{C_1}\frac{R_1+R_2}{R_1R_2} + s^2}$$

Örnek: 2nd order LPF Butterworth

$K = 2$, $\omega_c = 1000\,Hz$

$(a = \sqrt{2}\ ,\ b = 1)$

$R_1, R_2, R_3, R_4, C_1, C_2$?

CHAPTER 15: LAPLACE DÖNÜŞÜMÜ:

TABLE 15.1

Properties of the Laplace transform.

Property	$f(t)$	$F(s)$
Linearity	$a_1 f_1(t) + a_2 f_2(t)$	$a_1 F_1(s) + a_2 F_2(s)$
Scaling	$f(at)$	$\frac{1}{a}F\left(\frac{s}{a}\right)$
Time shift	$f(t-a)u(t-a)$	$e^{-as}F(s)$
Frequency shift	$e^{-at}f(t)$	$F(s+a)$
Time differentiation	$\frac{df}{dt}$	$sF(s) - f(0^-)$
	$\frac{d^2f}{dt^2}$	$s^2F(s) - sf(0^-) - f'(0^-)$
	$\frac{d^3f}{dt^3}$	$s^3F(s) - s^2f(0^-) - sf'(0^-) - f''(0^-)$
	$\frac{d^nf}{dt^n}$	$s^nF(s) - s^{n-1}f(0^-) - s^{n-2}f'(0^-) - \cdots - f^{(n-1)}(0^-)$
Time integration	$\int_0^t f(x)dx$	$\frac{1}{s}F(s)$
Frequency differentiation	$tf(t)$	$-\frac{d}{ds}F(s)$
Frequency integration	$\frac{f(t)}{t}$	$\int_s^\infty F(s)ds$
Time periodicity	$f(t) = f(t+nT)$	$\frac{F_1(s)}{1-e^{-sT}}$
Initial value	$f(0)$	$\lim_{s\to\infty} sF(s)$
Final value	$f(\infty)$	$\lim_{s\to 0} sF(s)$
Convolution	$f_1(t) * f_2(t)$	$F_1(s)F_2(s)$

TABLE 15.2

Laplace transform pairs.*

$f(t)$	$F(s)$
$\delta(t)$	1
$u(t)$	$\frac{1}{s}$
e^{-at}	$\frac{1}{s+a}$
t	$\frac{1}{s^2}$
t^n	$\frac{n!}{s^{n+1}}$
te^{-at}	$\frac{1}{(s+a)^2}$
t^ne^{-at}	$\frac{n!}{(s+a)^{n+1}}$
$\sin \omega t$	$\frac{\omega}{s^2+\omega^2}$
$\cos \omega t$	$\frac{s}{s^2+\omega^2}$
$\sin(\omega t + \theta)$	$\frac{s\sin\theta + \omega\cos\theta}{s^2+\omega^2}$
$\cos(\omega t + \theta)$	$\frac{s\cos\theta - \omega\sin\theta}{s^2+\omega^2}$
$e^{-at}\sin \omega t$	$\frac{\omega}{(s+a)^2+\omega^2}$
$e^{-at}\cos \omega t$	$\frac{s+a}{(s+a)^2+\omega^2}$

*Defined for $t \geq 0$; $f(t) = 0$, for $t < 0$.

15.5 Find the Laplace transform of each of the following functions:

(a) $t^2\cos(2t + 30°)u(t)$

(b) $3t^4e^{-2t}\,u(t)$

(c) $2tu(t) - 4\dfrac{d}{dt}\delta(t)$

(d) $2e^{-(t-1)}\,u(t)$

(e) $5u(t/2)$

(f) $6e^{-t/3}\,u(t)$

(g) $\dfrac{d^n}{dt^n}\delta(t)$

a) $\cos(2t) \longrightarrow \dfrac{s}{s^2+4}$

$\cos(2t+30°) = \cos(2t)\cos 30° - \sin(2t)\sin 30$

$\downarrow \mathcal{L}$

$\dfrac{s\cos 30°}{s^2+4} - \dfrac{2\sin 30°}{s^2+4}$

$t^2\cos(2t+30°)$

$\downarrow \mathcal{L}$

$\dfrac{d^2}{ds^2}\left[\dfrac{s\cos(30°}{s^2+4} - \dfrac{2\sin 30°}{s^2+4}\right]$

b) $e^{-2t}u(t) \xrightarrow{\mathcal{L}} \dfrac{1}{s+2}$

$3t^4e^{-2t}u(t) \longrightarrow 3\dfrac{d^4\left(\frac{1}{s+2}\right)}{ds^4} = 3\dfrac{24}{(s+2)^5}$

$\dfrac{1}{s+2}, \dfrac{-1}{(s+2)^2}, \dfrac{2}{(s+2)^3}, \dfrac{-6}{(s+2)^4}, \dfrac{+24}{(s+2)^5}$

c) $2t\,\underbrace{u(t)}_{1/s} - 4\dfrac{d\,\delta(t)}{dt} \xrightarrow{\mathcal{L}} \dfrac{-2}{s^2} - 4s$

d) $2e^{-(t-1)}u(t) = 2e\,e^{-t}u(t) \xrightarrow{\mathcal{L}} \dfrac{2e}{s+1}$

e) $5u\left(\frac{t}{2}\right) \xrightarrow{\mathcal{L}} 5\times 2$

$u(t) \xrightarrow{\mathcal{L}} \dfrac{1}{s}$ $\quad 5u\left(\frac{t}{2}\right) \longrightarrow 2\dfrac{1}{2s} = \dfrac{5}{s}$

f) $6e^{-t/3}u(t) = 6e^{-t/3}u\left(\frac{t}{3}\right)$

$$6e^{-t}u(t) \xrightarrow{\mathcal{L}} \frac{6}{s+1}$$

$$6e^{-t/3}u\left(\frac{t}{3}\right) \rightarrow \frac{6\times 3}{3s+1}$$

$$g)\ \frac{d^n\delta(t)}{dt^n} = s^n$$

15.10 In two different ways, find the Laplace transform of

$$g(t) = \frac{d}{dt}(te^{-t}\cos t)$$

I

$$\cos t \xrightarrow{\mathcal{L}} \frac{s}{s^2+1}$$

$$e^{-t}\cos t \xrightarrow{\mathcal{L}} \frac{s+1}{(s+1)^2+1} \Rightarrow te^{-t}\cos t \xrightarrow{\mathcal{L}} \underbrace{\frac{d}{ds}\left[\frac{s+1}{(s+1)^2+1}\right]}$$

$$\frac{d}{dt}(te^{-t}\cos t) \xrightarrow{\mathcal{L}} s\frac{d}{ds}\left[\frac{s+1}{(s+1)^2+1}\right]$$

II

$$e^{-t}\cos t + t\left(-e^{-t}\cos t - e^{-t}\sin t\right)$$

$$\underbrace{e^{-t}\cos t} - \underbrace{te^{-t}\cos t} - te^{-t}\sin t$$

$$\frac{s+1}{(s+1)^2+1} - \frac{d}{ds}\left[\frac{s+1}{(s+1)^2+1}\right] - \frac{d}{ds}\left[\frac{1}{(s+1)^2+1}\right]$$

15.14 Find the Laplace transform of the signal in Fig. 15.26.

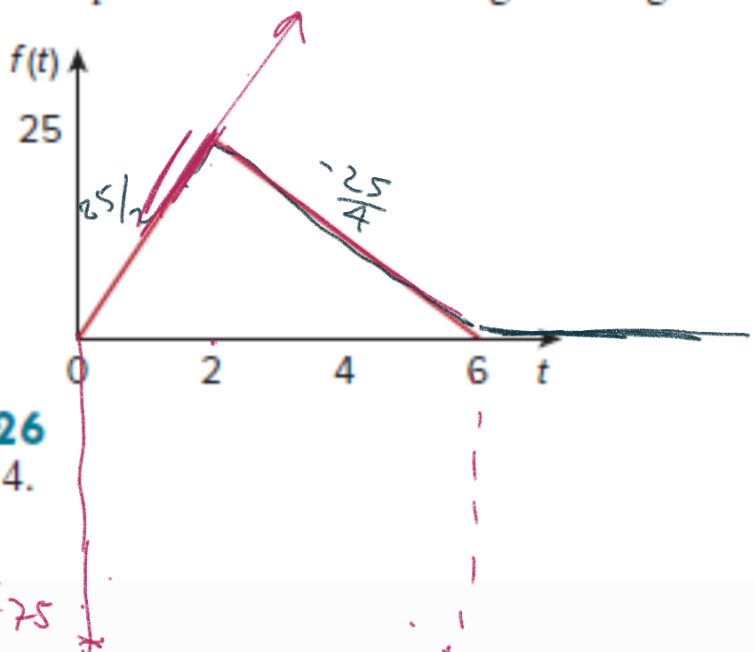

Figure 15.26
For Prob. 15.14.

$$f(t) = \frac{25}{2} t \underbrace{u(t)}_{\frac{1}{s}} - \boxed{\frac{75}{4}(t-2)u(t-2)} + \frac{25}{4}(t-6)u(t-6)$$

$$F(s) = \frac{25}{2}\frac{d}{ds}\left(\frac{1}{s}\right) - \frac{75}{4}e^{-2s}\frac{d}{ds}\left(\frac{1}{s}\right) + \frac{25}{4}e^{-6s}\frac{d}{ds}\left(\frac{1}{s}\right)$$

$$F(s) = \frac{-1}{s^2}\left[\frac{25}{2} - \frac{75}{4}e^{-2s} + \frac{25}{4}e^{-6s}\right]$$

15.19 Calculate the Laplace transform of the infinite train of unit impulses in Fig. 15.31.

dürtü treni

Not: $\delta(t) \xrightarrow{\mathcal{L}} 1$

$\delta(t-a) \xrightarrow{\mathcal{L}} e^{-as}$

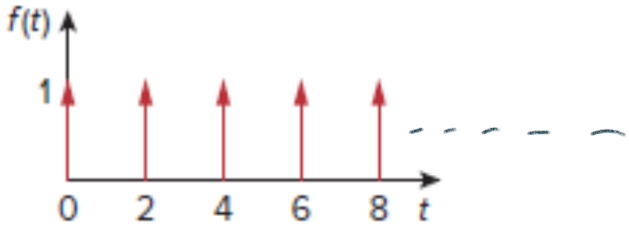

Figure 15.31
For Prob. 15.19.

$$\delta(t) + \delta(t-2) + \delta(t-4) + \cdots$$

$$\sum_{i=0}^{\infty} \delta(t-2i) \xrightarrow{\mathcal{L}} \sum_{i=0}^{\infty} e^{-2is}$$

$$= \sum_{i=0}^{\infty} \left(e^{-2s}\right)^i$$

$$\boxed{F(s) = \frac{1}{1-e^{-2s}}}$$

15.26 Determine the initial and final values of $f(t)$, if they exist, given that:

(a) $F(s) = \dfrac{5s^2 + 3}{s^3 + 4s^2 + 6}$

(b) $F(s) = \dfrac{s^2 - 2s + 1}{4(s-2)(s^2 + 2s + 4)}$

$$\boxed{\lim_{t \to 0} f(t) = \lim_{s \to \infty} sF(s)}$$

$$\boxed{\lim_{t \to \infty} f(t) = \lim_{s \to 0} sF(s)}$$

a) $$\left.\frac{s(5s^2+3)}{s^3+4s^2+6}\right|_{s=\infty} = 5 = f(0)$$

$$\left.\frac{s(5s^2+3)}{s^3+4s^2+6}\right|_{s=0} = 0 \Rightarrow f(\infty)$$

b) $$\left.\frac{s(s^2-2s+1)}{4(s-2)(s^2+2s+4)}\right|_{s=\infty} = \cancel{\frac{1}{4}} = f(0)$$

Sağ yarı düzlemde kutbu var. bu sonsuza gider bir terim var demektir. Limit yoktur. Dolayısıyla bu kural kullanılamaz

$$\underbrace{\left.\frac{s(s^2-2s+1)}{4(s-2)(s^2+2s+4)}\right|_{s=0}}$$

$$= \cancel{0} = f(\infty)$$

$$\frac{-1 + \sqrt{-12}}{2} = -1 \mp \sqrt{3}j$$

$$2,\ -1+\sqrt{3}j,\ -1-\sqrt{3}j$$

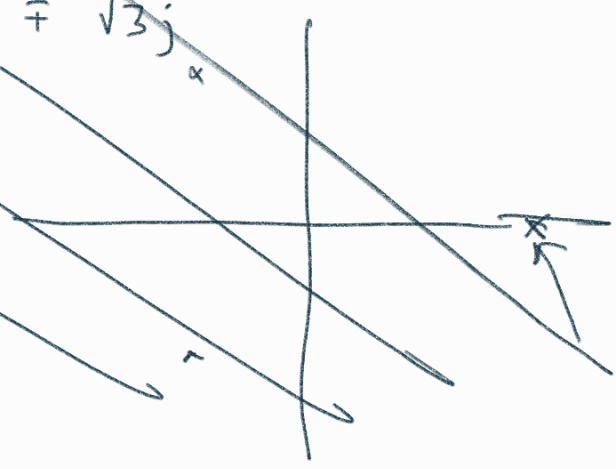

15.32 Determine the inverse Laplace transform of each of the following functions:

(a) $\dfrac{8(s+1)(s+3)}{s(s+2)(s+4)}$

(b) $\dfrac{s^2-2s+4}{(s+1)(s+2)^2}$

(c) $\dfrac{s^2+1}{(s+3)(s^2+4s+5)}$

a)

$$F(s) = \frac{K_1 \to 3}{s} + \frac{K_2 \to 2}{s+2} + \frac{K_3 \to 3}{s+4}$$

$$K_1 = \frac{8 \times 1 \times 3}{2 \times 4} = 3 \qquad K_3 = \frac{8(-3)(-1)}{(-4)(-2)} = 3$$

$$K_2 = \frac{8 \times (-1)(1)}{(-2)(2)} = 2$$

$$f(t) = \left(3 + 2e^{-2t} + 3e^{-4t}\right) u(t)$$

15.26

$s^3 + 4s^2 + 6$

$$\frac{d}{dt} \to 3s^2 + 8s = s(3s+8)$$

		$-8/3$		0	
s	$-$		$-$		$+$
$3s+8$	$-$		$+$		$+$
	$+$		$-$		$+$

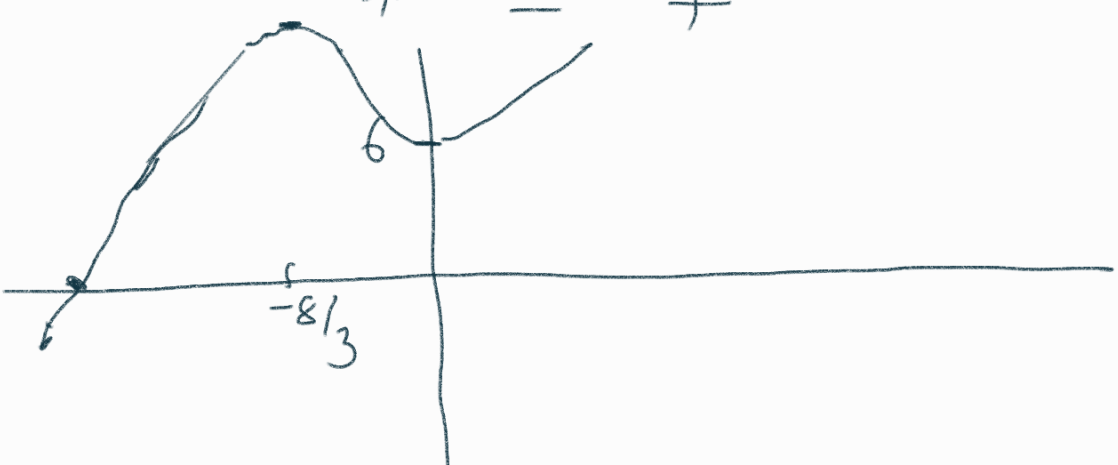

b) $$\frac{s^2-2s+4}{(s+1)(s+2)^2} = \frac{K_1}{s+1} + \frac{K_2}{(s+2)^2} + \frac{K_3}{(s+2)}$$

$K_1 \to 7$, $K_2 \to -12$, $K_3 \to -6$

$$K_3 = \left(\frac{d}{ds}\left\{(s+2)^2 F(s)\right\}\right)\Bigg|_{s=-2}$$

$$\left\{\frac{d}{ds}\,\frac{s^2-2s+4}{s+1}\right\}\Bigg|_{s=-2} = \frac{(2s-2)(s+1)-(s^2-2s+4)}{(s+1)^2}\Bigg|_{s=-2}$$

$$= \frac{(-6)(-1)-(4+4+4)}{(-1)^2}$$

$$= \frac{6-12}{1} = -6$$

$$\boxed{\frac{7}{s+1} \quad \frac{-12}{(s+2)^2} \quad \frac{-6}{s+2}}$$

$$= \frac{7(s+2)^2 - 12(s+1) - 6(s+1)(s+2)}{(s+1)(s+2)^2}$$

$$= \frac{7s^2+28s+28-12s-12-6s^2-18s-12}{(s+1)^2(s+2)^2}$$

s^2-2s+4 ✓

$$f(t) = \left(7e^{-t} - 12te^{-2t} - 6e^{-2t}\right)u(t)$$

c) $$\frac{s^2+1}{(s+3)(s^2+4s+5)}$$

$$s_{1,2} = \frac{-4 \mp \sqrt{16-20}}{2}$$

$$= -2 \mp j$$

$$\frac{K_1}{s+3} + \underbrace{\frac{K_2}{s+2-j} + \frac{K_2^*}{s+2+j}}_{\mathcal{L}^{-1}} \qquad 2|K|e^{-\alpha t}\cos(\omega t + \theta_K)$$

$K_1 \to 5$, $K_2 \to -2$, $K_2^* \to -2$

$$\to 4e^{-2t}\cos(2t+180)$$

$$K_1 = \frac{9+1}{9-12+5} = 5$$

$$K_2 = \frac{(-2+j)^2+1}{(-2+j+3)(2j)} = \frac{+4-4j-\cancel{1}+\cancel{1}}{(1+j)(2j)}$$

$$= \frac{4\sqrt{2}\angle -45^\circ}{\sqrt{2}\angle 45 \;\; 2\angle 90^\circ}$$

$$= 2\angle -180^\circ = -2$$

$$K_2^* = -2$$

$$f(t) = 5e^{-3t} + 4e^{-2t}\cos(1t+180^\circ)$$

$$F(s) = \frac{s^2+1}{(s+3)(s^2+4s+5)} = \frac{K_1}{s+3} + \frac{K_2 s + K_3}{s^2+4s+5}$$

$K_1 \to 5$, $K_2 \to -4$, $K_3 \to -8$

$$5s^2 + 20s + 25 + K_2 s^2 + K_3 s + 3K_2 s + 3K_3 = s^2 + 1$$

$K_2 = -4$

$20 + K_3 + 3K_2 = 0 \implies K_3 = -8$

$25 + 3K_3 = 1$ ✓

$$F(s) = \frac{5}{s+3} - \frac{4s+8}{\underbrace{s^2+4s+5}_{(s+2)^2+1}}$$

$$\frac{5}{s+3} - \frac{4(s+2)}{(s+2)^2+1}$$

$5e^{-3t} - 4e^{-2t}\cos(t)$ AYNI

15.40 Show that

$$\mathcal{L}^{-1}\left[\frac{4s^2+7s+13}{(s+2)(s^2+2s+5)}\right] = \left[\sqrt{2}e^{-t}\cos(2t+45^\circ) + 3e^{-2t}\right]u(t)$$

$$\left(2|K|e^{-\alpha t}\cos(\omega t+\theta_K)\right)$$

$$s_{1,2} = -\alpha \mp j\omega$$

$$s_{1,2} = \frac{-2 \mp \sqrt{4-20}}{2} = -1 \mp 2j$$

$$F(s) = \frac{K_1 \to 3}{s+2} + \frac{K_2 \frac{1}{\sqrt{2}}\angle 45^\circ}{s+1-2j} + \frac{K_2^* \frac{1}{\sqrt{2}}\angle -45^\circ}{s+1+2j}$$

$$K_1 = \frac{16-14+13}{4-4+5} = 3$$

$$K_2 = \frac{4(-1+2j)^2 + 7(-1+2j) + 13}{(-1+2j+2)(4j)}$$

$$= \frac{4 - 16j - 16 - 7 + 14j + 13}{(1+2j)(4j)} = \frac{-6-2j}{(1+2j)(4j)}$$

$$K_2 = \frac{-3-j}{(1+2j)4j} \frac{(-j)}{(-j)} = \frac{-1+3j}{2(1+2j)}$$

$$|K_2| = \frac{\sqrt{10}}{2\sqrt{5}} = \frac{1}{\sqrt{2}}$$

$$\frac{(-1+3j)(1-2j)}{2\times 5} = \frac{-1+2j+3j+6}{2\times 5} = \frac{5+5j}{10}$$

$$= \frac{5\sqrt{2}\angle 45^\circ}{10}$$

$$= \frac{1}{\sqrt{2}}\angle 45^\circ$$

$$f(t) = \left[3e^{-2t} + 2\frac{1}{\sqrt{2}}e^{-t}\cos(2t+45^\circ)\right]u(t)$$

$s(s+1)$

(c) $Z(s) = \dfrac{5}{s(s+1)(s^2+6s+10)}$

***15.41** Let $x(t)$ and $y(t)$ be as shown in Fig. 15.36. Find $z(t) = x(t) * y(t)$.

15.42 Design a problem to help other students better understand how to convolve two functions together.

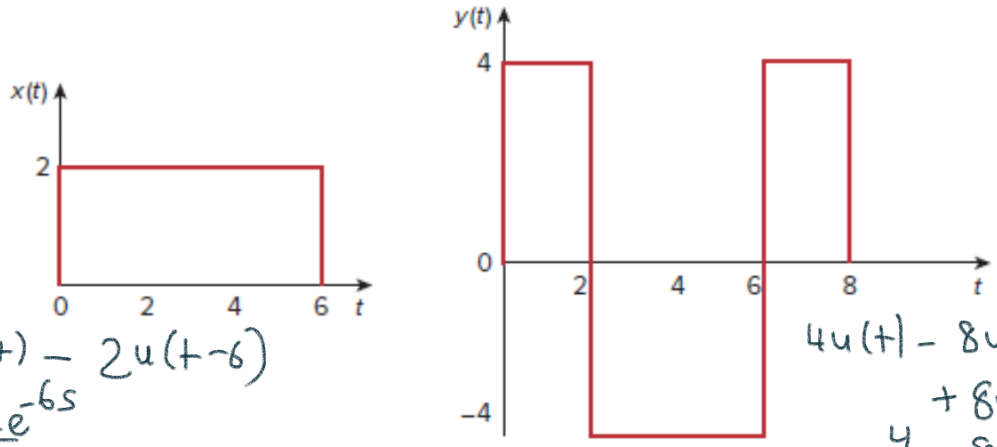

$2u(t) - 2u(t-6)$

$\frac{2}{s} + \frac{2e^{-6s}}{s}$

$4u(t) - 8u(t-2) + 8u(t-6) - 4u(t-8)$

$\frac{4}{s} - \frac{8}{s}e^{-2s} + \frac{8}{s}e^{-6s} - \frac{4}{s}e^{-8s}$

Figure 15.36
For Prob. 15.41.

$$x(t) * y(t) \xrightarrow{\mathcal{L}} X(s)\,Y(s)$$

$$x(t) * y(t) = \int_{-\infty}^{\infty} x(\tau)\,y(t-\tau)\,d\tau$$

veya $\displaystyle\int_{-\infty}^{\infty} y(\tau)\,x(t-\tau)\,d\tau$

$8 - t + t - 6$

2

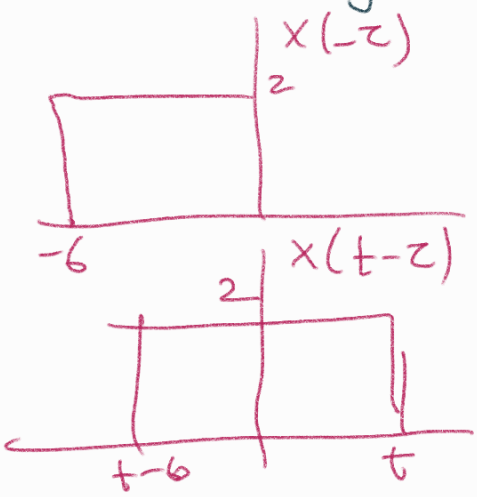

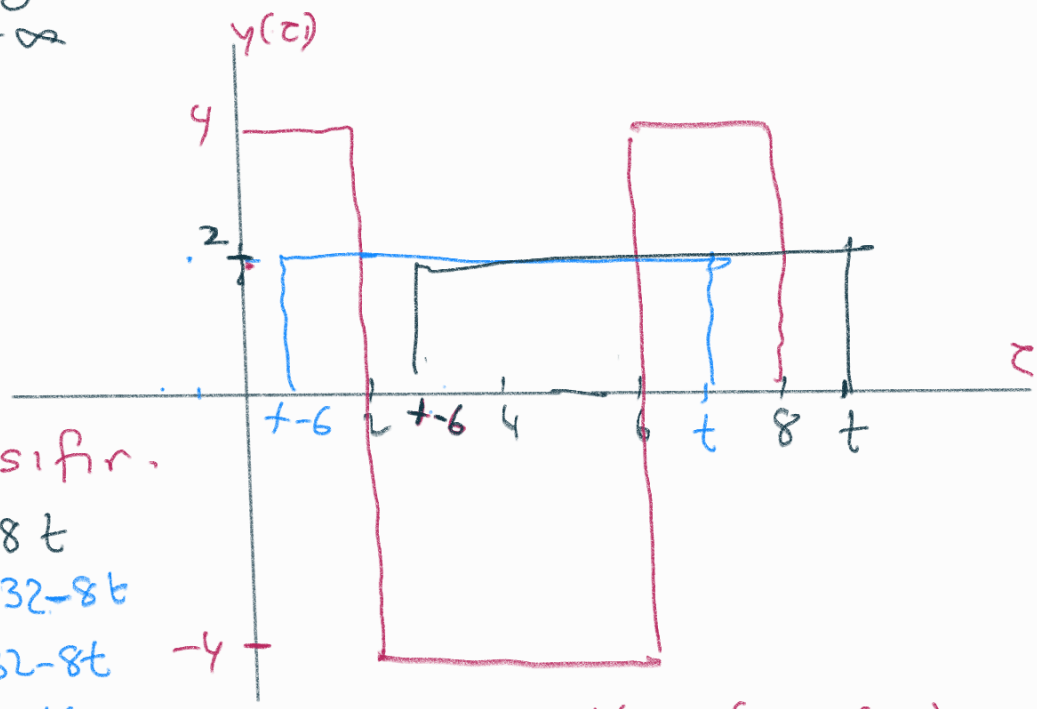

$t < 0 \rightarrow$ sifır.

$0 < t < 2 \rightarrow 8t$

$2 < t < 4 \rightarrow 32 - 8t$

$4 < t < 6 \rightarrow 32 - 8t$

$6 < t < 8 \rightarrow -16$

$8 < t < 12 \rightarrow 8t - 80$

$16 + (t-2)(-8)$

$16 + 16 - 8t$

$12 < t < 14 \rightarrow 112 - 8t$

$14 < t \rightarrow 0$

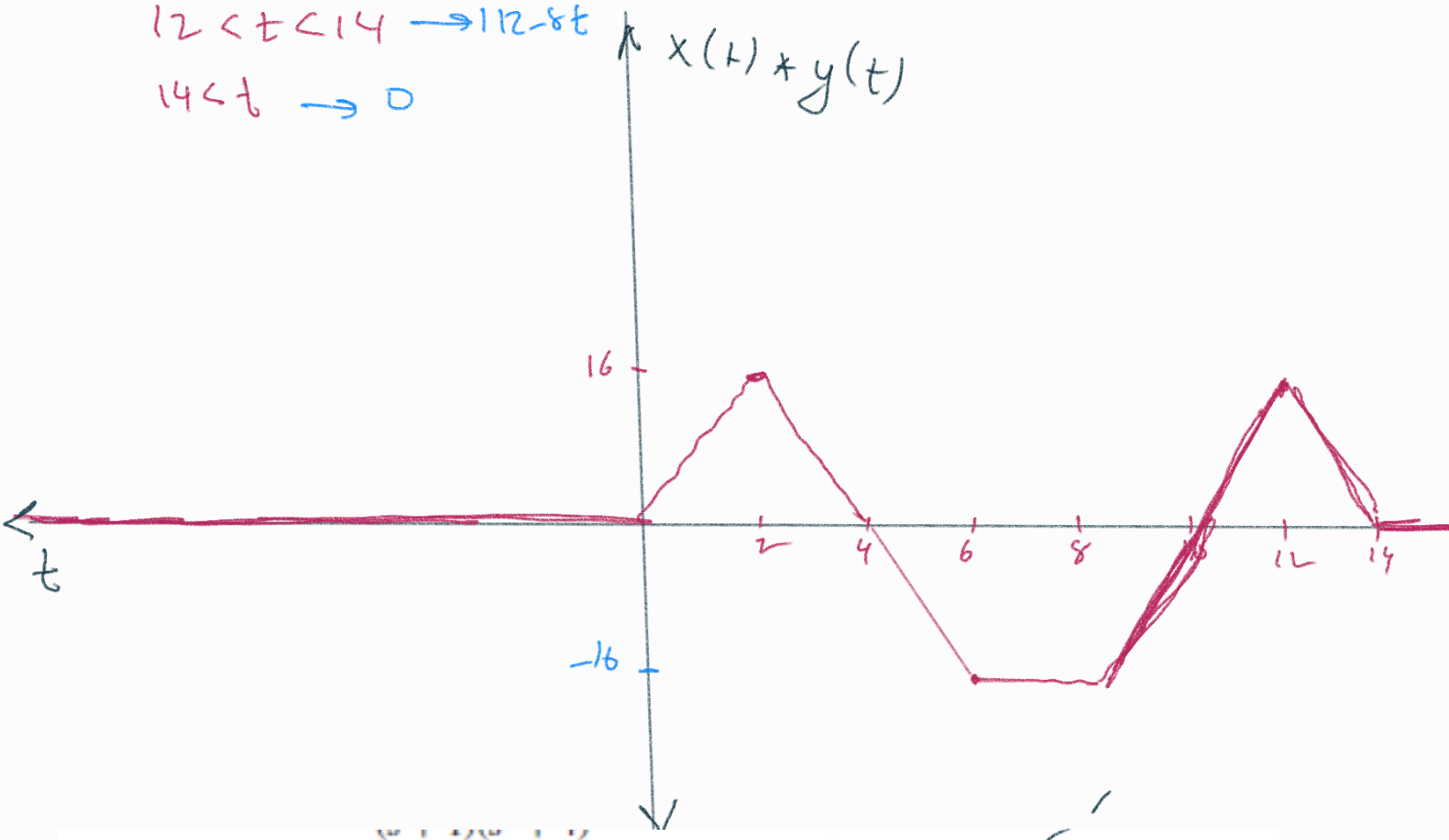

***15.49** Use the convolution integral to find:

(a) $t * e^{at}u(t)$

(b) $\cos(t) * \cos(t)u(t)$

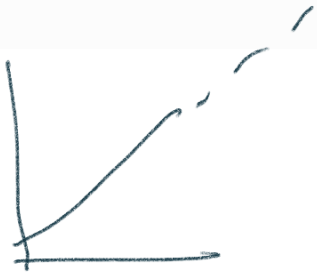

$$x(t) * y(t) = \int_{-\infty}^{\infty} x(\tau)\, y(t-\tau)\, d\tau$$

$$= \int_{-\infty}^{\infty} \underbrace{\tau u(\tau)\, e^{a(t-\tau)}\, u(t-\tau)}_{\tau<0 \text{ ve } \tau>t \text{ iken sıfır}}\, d\tau$$

$$= \int_{0}^{t} \tau\, e^{at}\, e^{-a\tau}\, d\tau$$

$$= e^{at} \underbrace{\int_{0}^{t} \tau\, e^{-a\tau}\, d\tau}$$

Not $\int u\,dv = uv - \int v\,du$

$\tau = u$ $\quad e^{-a\tau}d\tau = dv$

$d\tau = du$ $\quad -\frac{1}{a}e^{-a\tau} = v$

$$= e^{at}\left[-\frac{\tau}{a}e^{-a\tau}\Big|_{0}^{t} - \int_{0}^{t} -\frac{1}{a}e^{-a\tau}\, d\tau \right]$$

$$= e^{at}\left[\frac{-t}{a}e^{-at} + \int_0^t \frac{1}{a}e^{-a\tau}\,d\tau\right]$$

$$= e^{at}\left[\frac{-t}{a}e^{-at} + \frac{-1}{a^2}e^{-a\tau}\Big|_0^t\right]$$

$$= e^{at}\left[-\frac{t}{a}e^{-at} + \frac{1}{a^2} - \frac{1}{a^2}e^{-at}\right] = -\frac{t}{a} - \frac{1}{a^2} + \frac{e^{at}}{a^2}$$

b) $\cos(t)u(t) * \cos(t)u(t)$ $\qquad t$

$$= \int_{-\infty}^{\infty} \cos(\tau)u(\tau)\cos(t-\tau)u(t-\tau)\,d\tau$$

$$= \int_0^t \cos(\tau)\cos(t-\tau)\,d\tau$$

$$\int_0^t \frac{1}{2}\cos(t) + \frac{1}{2}\cos(2\tau-t)\,d\tau$$

$$= \frac{1}{2}\cos(t)\tau\Big|_0^t + \frac{1}{4}\sin(2\tau-t)\Big|_0^t$$

$$= \frac{t}{2}\cos(t) + \frac{1}{4}\sin(t) - \frac{1}{4}\sin(-t)$$

$$= \frac{t}{2}\cos(t) + \frac{1}{2}\sin(t)$$

15.52 Use the Laplace transform to find $i(t)$ for $t > 0$ if

$$\frac{d^2i}{dt^2} + 3\frac{di}{dt} + 2i + \delta(t) = 0,$$

$$i(0) = 0, \qquad i'(0) = 3$$

$$i \longrightarrow I$$

$$\frac{di}{dt} \longrightarrow sI - i(0)$$

$$\frac{d^2 i}{dt^2} \longrightarrow s\left(sI - i(0)\right) - i'(0)$$

$$= s^2 I - s\,i(0) - i'(0)$$

$$s^2 I - s\,\overset{0}{\cancel{i(0)}} - i'(0) + 3sI - 3\,\overset{0}{\cancel{i(0)}} + 2I + 1 = 0$$

$$I\left(s^2 + 3s + 2\right) - 3 + 1 = 0$$

$$I = \underbrace{\frac{2}{s^2+3s+2}} = \frac{K_1 \to 2}{s+1} + \frac{K_2 \to -2}{s+2}$$

$$i(t) = \left(2e^{-t} - 2e^{-2t}\right) u(t)$$

15.60 Solve the following integrodifferential equation

$$2\frac{dx}{dt} + 5x + 3\int_0^t x\,dt + \overset{4u(t)}{4} = \sin 4t, \qquad x(0) = 1$$

$$\frac{dx}{dt} \longrightarrow sX - x(0) \qquad \frac{4}{s^2+16}$$

$$\int_0^t x\,dt \longrightarrow \frac{X}{s}$$

$$2sX - 2 + 5X + \frac{3X}{s} + \frac{4}{s} = \frac{4}{s^2+16}$$

$$\left(2s + 5 + \frac{3}{s}\right)X = \frac{4}{s^2+16} - \frac{4}{s} + 2$$

$$\frac{2s^2+5s+3}{\cancel{s}}\,X = \frac{4s - 4s^2 - 64 + 2s\left(s^2+16\right)}{\left(s^2+16\right)\cancel{s}}$$

$$X = \frac{+2s^3 - 4s^2 + 4s + 32s - 64}{(s^2+16)(2s^2+5s+3)}$$

$$X = \frac{+\cancel{2}(s^3 - 2s^2 + 18s - 32)}{(s^2+16)\cancel{2}(s^2+2.5s+1.5)}$$

$$\frac{-2.5 \mp \sqrt{6.25 - 6}}{2}$$

$$= -\frac{s^3 - 2s^2 + 18s - 32}{(s-4j)(s+4j)(s+1)(s+1.5)}$$

$$\frac{-2.5 \mp 0.5}{2}$$

$$-1, -1.5$$

$$= \frac{K_1}{s+1} + \frac{K_2}{s+1.5} + \frac{K_3}{s-4j} + \frac{K_3^*}{s-4j}$$

$$K_1 = -\frac{-1 - 2 - 18 - 32}{17 \times 0.5} = -\frac{106}{17}$$

$$K_2 = -\frac{(-1.5)^3 - 4.5 - 27 - 32}{18.25\,(-0.5)} = 7.329$$

$$x(t) = \left[K_1 e^{-t} + K_2 e^{-1.5t} + 2|K_3| \cos(4t + \theta_K)\right] u(t)$$

$$K_3 = X(s)(s-4j)\Big|_{s=4j}$$

CHAPTER 16: LAPLACE DÖNÜŞÜMÜ İLE DEVRE ANALİZİ

R: $v = iR$

$\downarrow \mathcal{L}$

$V = IR$

L: $v = L\dfrac{di}{dt} \xrightarrow{\mathcal{L}} V = L\left[sI - i(0^-)\right]$

$V = sLI - Li(0^-)$

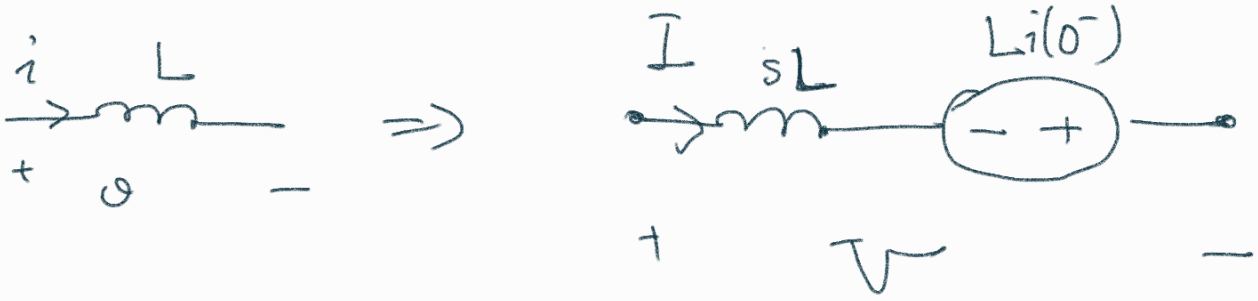

$I = \dfrac{V + Li(0^-)}{sL}$

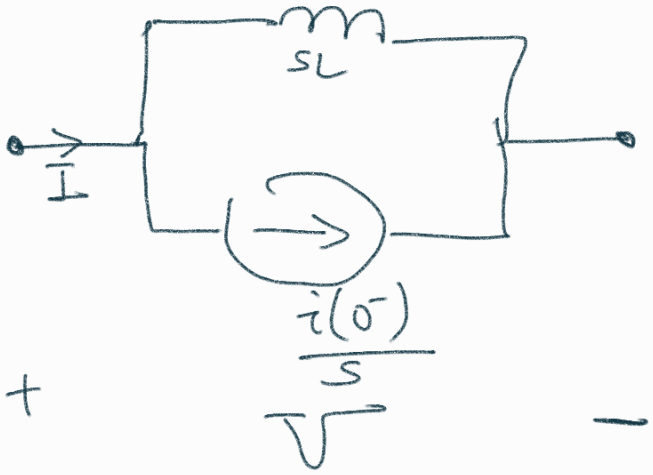

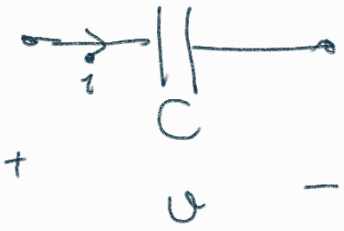

$i = C\dfrac{dv}{dt} \xrightarrow{\mathcal{L}} I = sCV - Cv(0^-)$

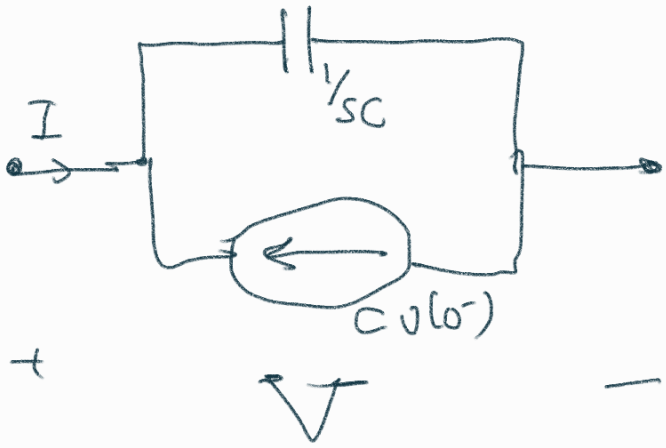

$$V = \frac{I + Cv(0^-)}{sC} = \frac{I}{sC} + \frac{v(0^-)}{s}$$

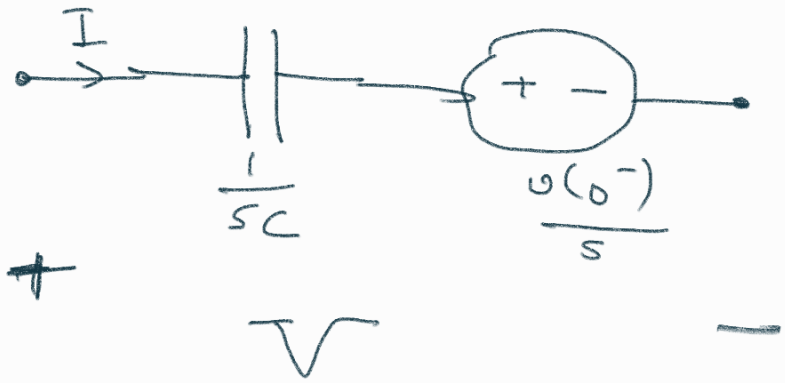

16.10 The step responses of a series *RLC* circuit are

$V_c = 40 - 10e^{-2000t} - 10e^{-4000t}$ V, $t > 0$ $\xrightarrow{t=0}$ $V_c(0^-) = 20$

$i_L(t) = 3e^{-2000t} + 6e^{-4000t}$ mA, $t > 0$ $\xrightarrow{t=0}$ $i_L(0^-) = 9$ mA

(a) Find *C*.

(b) Determine what type of damping is exhibited by the circuit.

overdamped / aşırı sönümlü

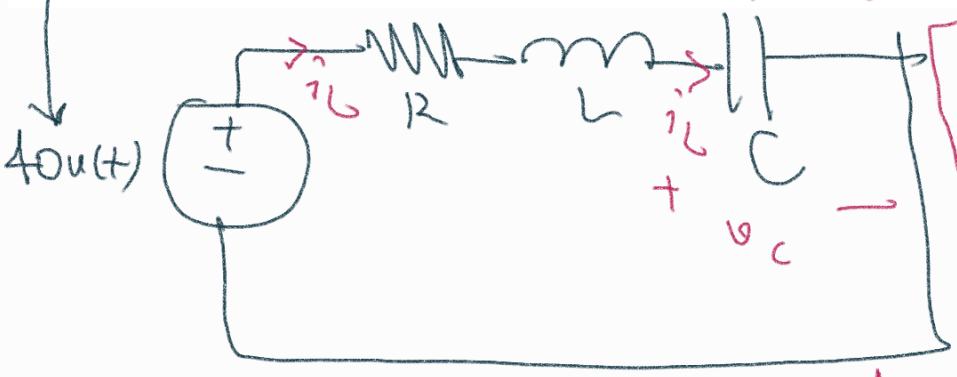

$$C\left(+200000e^{-2000t} + 40000e^{-4000t}\right) = \left(3e^{-2000t} + 6e^{-4000t}\right)10^{-3}$$

$$C \times 200000 = 3 \times 10^{-3}$$

$$C = 0.15\ \mu F$$

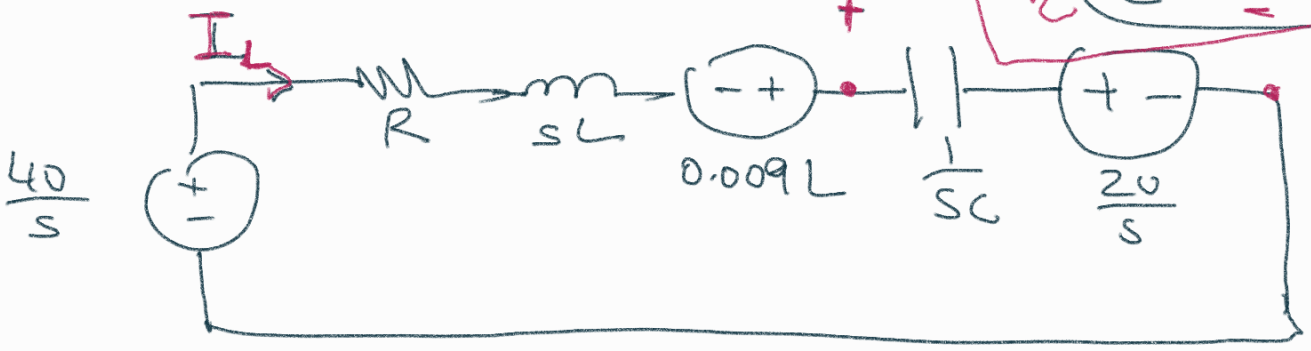

DOĞRU YÖNTEM

$$I_L = \frac{\frac{40}{s} + 0.009L - \frac{20}{s}}{R + sL + \frac{1}{sC}}$$

$$= \frac{0.009Ls + 20}{s^2L + sR + \frac{1}{C}}$$

$$\boxed{I_L = \frac{0.009s + \frac{20}{L}}{s^2 + s\frac{R}{L} + \frac{1}{LC}}} \text{ mA}$$

Kökler -2000, -4000

$$\frac{-\frac{R}{L} \mp \sqrt{\frac{R^2}{L^2} - \frac{4}{LC}}}{2}$$

$$V_C = \frac{1}{sC} I_L + \frac{20}{s}$$

$$\boxed{V_C = \frac{\frac{0.009}{C}s + \frac{20}{LC}}{s\left(s^2 + s\frac{R}{L} + \frac{1}{LC}\right)} + \frac{20}{s}}$$

$\rightarrow 40u(t)$

$$\boxed{-\frac{R}{L} = -6000 \text{ bulunur}}$$

$$\frac{-6000 + \sqrt{6000^2 - \frac{4}{LC}}}{2} = -2000$$

$$\sqrt{6000^2 - \frac{4}{LC}} = 2000$$

$$36 \cdot 10^6 - 4 \times 10^6 = \frac{4}{LC}$$

$$\boxed{8 \times 10^6 = \frac{1}{LC}}$$

$$I_L = \frac{K_1}{s+2000} + \frac{K_2}{s+4000} = \frac{0.009s + \frac{20}{L}}{(s+2000)(s+4000)}$$

$$K_1 = \frac{-18 + \frac{20}{L}}{2000} = 3 \times 10^{-3}$$

$$-18 + \frac{20}{L} = 6$$

$$\frac{20}{L} = 24$$

$$\boxed{L = \frac{20}{24}\ H}$$

$$V_C = \frac{K_1}{s} + \frac{K_2}{s+2000} + \frac{K_3}{s+4000} + \frac{20}{s}$$

$$= (K_1 + 20) + K_2 e^{-2000t} + K_3 e^{-4000t}$$

$$= 40 - 10e^{-2000t} - 10e^{-4000t}$$

$$V_C = \frac{\frac{0.009s}{C} + \frac{20}{LC}}{s(s+2000)(s+4000)} + \frac{20}{s}$$

$$\boxed{\frac{20}{LC} = 20} \Rightarrow LC = 1 \Rightarrow \boxed{C = \frac{24}{20}}$$

$$\frac{\frac{-18}{C} + \frac{20}{LC}}{2000(-2000)} = -10$$

$$\frac{\frac{-18}{24} \times 20 + 20}{-4 \times 10^6} = -10$$

16.19 The switch in Fig. 16.42 moves from position A to position B at $t = 0$ (please note that the switch must connect to point B before it breaks the connection at A, a make before break switch). Find $v(t)$ for $t > 0$.

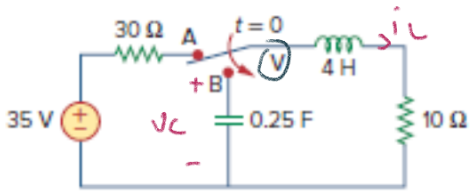

Figure 16.42
For Prob. 16.19.

Baslangıç:

$v_C(0^-) = 0$

$i_L(0^-) = \frac{35}{40} = 7/8$

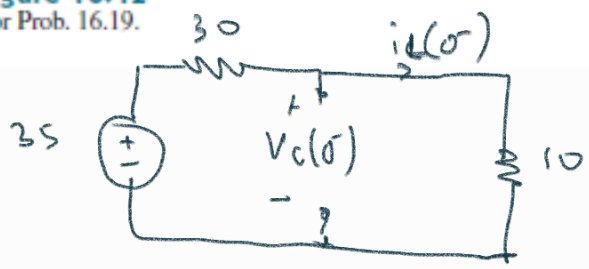

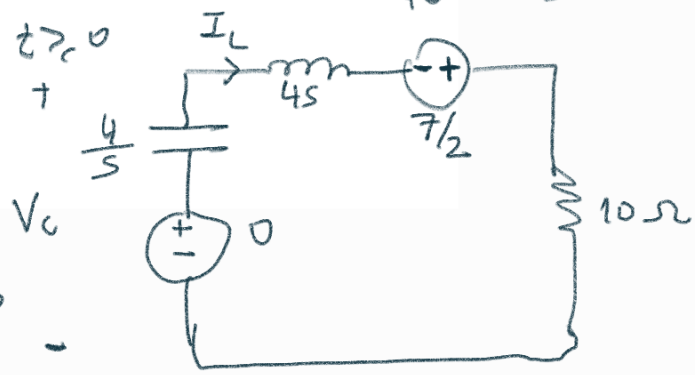

$\longrightarrow v_L = L \frac{di_L}{dt}$

$\longrightarrow V_L = sLI_L - Li_L(0^-)$

$i_C = C \frac{dv_C}{dt}$

$I_C = sCV_C - Cv_C(0^-)$

$V_C = \frac{I_C + Cv_C(0^-)}{sC} = \frac{I_C}{sC} + \frac{v_C(0^-)}{sC}$

$I_L\left(\frac{4}{s} + 4s + 10\right) - \frac{7}{2} = 0$

$I_L = \frac{\frac{7}{2}}{4s + 10 + \frac{4}{s}}$

$I_L = \frac{\frac{7s}{2}}{\frac{4s^2 + 10s + 4}{s}}$

$I_L = \frac{7s}{8\left(s^2 + \frac{5}{2}s + 1\right)}$

$\frac{-\frac{5}{2} \mp \sqrt{\frac{25}{4} - \frac{16}{4}}}{2} = \frac{-\frac{5}{2} \mp \frac{3}{2}}{2}$

$= -\frac{4}{2}, -\frac{1}{2}$

$= (-2, -0.5)$

$I_L = \frac{K_1}{s+2} + \frac{K_2}{s+0.5}$

$K_1 = \frac{7(-2)}{8(-1.5)} = +\frac{7}{6}$

$K_2 = \frac{7(-0.5)}{8(1.5)} = \frac{-3.5}{12}$

$V_C = -\frac{4}{s} I_L = -\frac{7}{2\left(s^2 + \frac{5}{2}s + 1\right)} = \frac{K_1}{s+2} + \frac{K_2}{s+0.5}$

$=$

$K_1 = \frac{-7}{2(-1.5)} = 7/3$

$K_2 = \frac{-7}{2(+1.5)} = -7/3$

$$v_c(t) = \left(\frac{7}{3}e^{-2t} - \frac{7}{3}e^{-0.5t}\right)u(t)$$

16.23 Obtain $v(t)$ for $t > 0$ in the circuit of Fig. 16.46.

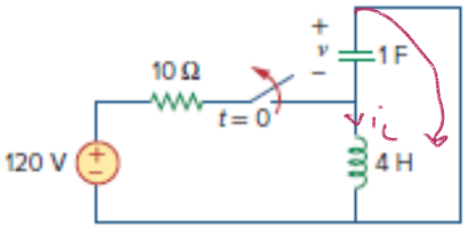

Figure 16.46
For Prob. 16.23.

$t = 0^-$

$v(0^-) = 0$

$i_L(0^-) = 12$ A

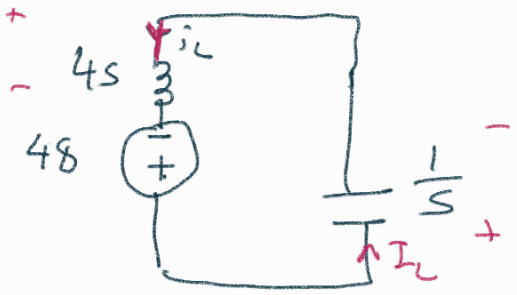

$$\left(4s + \frac{1}{s}\right) I_L = 48$$

$$I_L = \frac{48s}{4s^2 + 1}$$

$$= \frac{12s}{s^2 + 1/4}$$

$$i_L(t) \Rightarrow 12\cos\left(\frac{1}{2}t\right)$$

$$V = \frac{1}{s} I_L$$

$$= \frac{12}{s^2 + 1/4} \xrightarrow{\mathcal{L}} \mathcal{L}^{-1}\left\{24 \cdot \frac{\frac{1}{2}}{s^2 + 1/4}\right\}$$

$$= 24\sin\left(\frac{1}{2}t\right)$$

$$= 24\cos\left(\frac{1}{2}t - 90^\circ\right)$$

16.25 Calculate $v(t)$ for $t > 0$ in the circuit of Fig. 16.48.

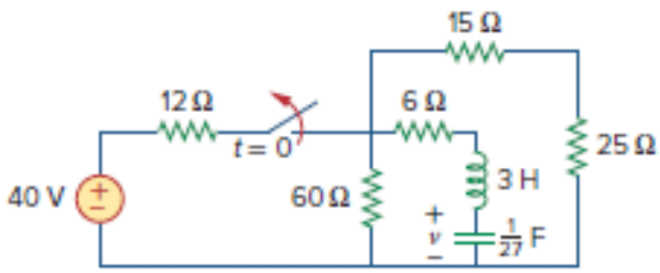

Figure 16.48
For Prob. 16.25.

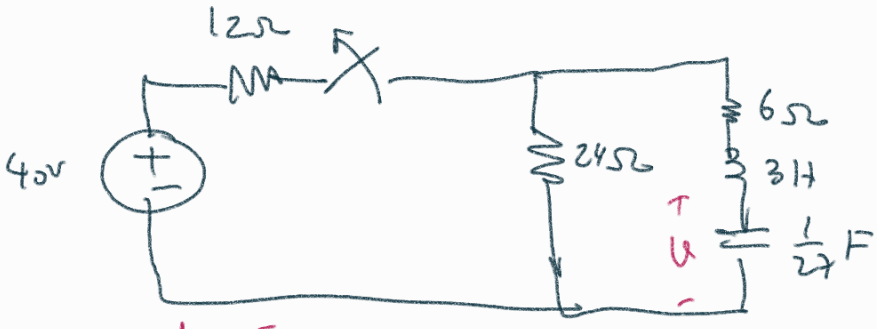

$t=0^-$

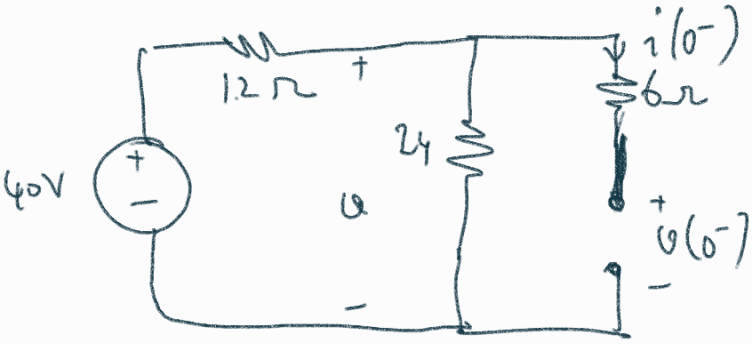

$v(0^-) = 80/3$ ✓

$i(0^-) = 0$

$i_c = C\frac{dv_c}{dt}$

$I_c = sCV_c - Cv_c(0^-)$

$$\frac{I_c + Cv_c(0^-)}{sC} = V_c$$

$\frac{v_c(0^-)}{s}$

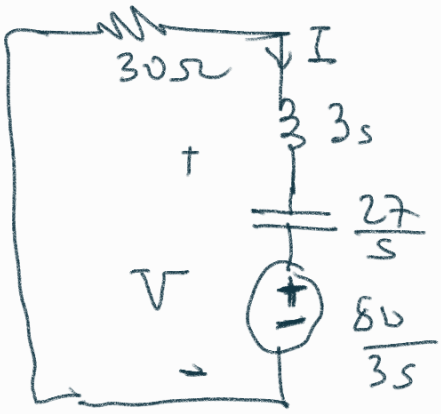

$$I\left(3s + 30 + \frac{27}{s}\right) + \frac{80}{3s} = 0$$

$$I = \frac{-\frac{80}{3s}}{\frac{3s^2+30s+27}{s}} = \boxed{\frac{-80}{9(s^2+10s+9)}}$$

$$= \frac{-80}{9(s+1)(s+9)} = \frac{K_1}{s+1} + \frac{K_2}{s+9}$$

$$V = \frac{27}{s}I + \frac{80}{3s}$$

$$= \frac{-240}{s(s+1)(s+9)} + \frac{80}{3s}$$

$$V = \frac{K_1}{s} + \frac{K_2}{s+1} + \frac{K_3}{s+9} + \frac{80/3}{s}$$

$K_1 = \frac{-240}{9} = \frac{-80}{3}$ / $K_2 = \frac{-240}{(-1)(8)} = 30$ / $K_3 = \frac{-240}{(-9)(-8)} = \frac{-10}{3}$

$$v(t) = \left(\cancel{\frac{-80}{3}} + 30e^{-t} - \frac{10}{3} e^{-9t} + \cancel{\frac{80}{3}} \right) u(t)$$

$$v(t) = \left(30e^{-t} - \frac{10}{3} e^{-9t} \right) u(t)$$

16.28 For the circuit in Fig. 16.51, find $v(t)$ for $t > 0$.

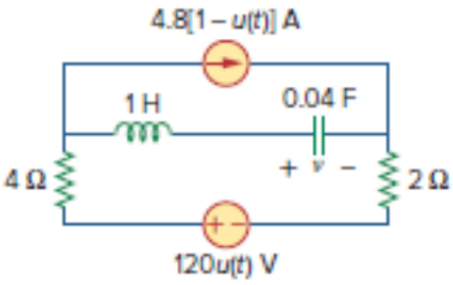

Figure 16.51
For Prob. 16.28.

$t = 0^-$

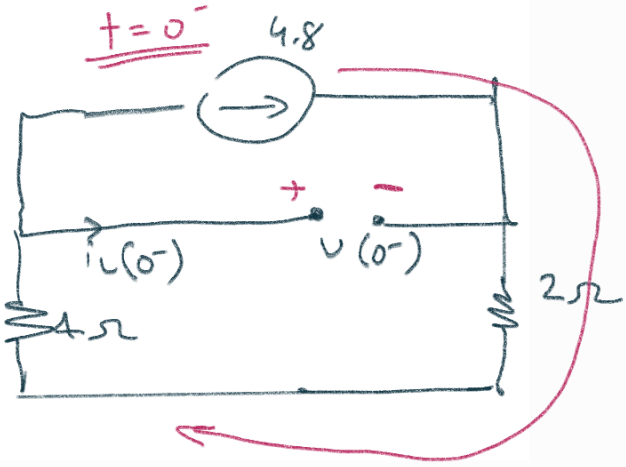

$$i_L(0^-) = 0$$

$$v(0^-) = -6 \times 4.8 = \begin{array}{r} 4.8 \\ 6 \\ \hline 28.8 \end{array}$$

$t \geq 0$

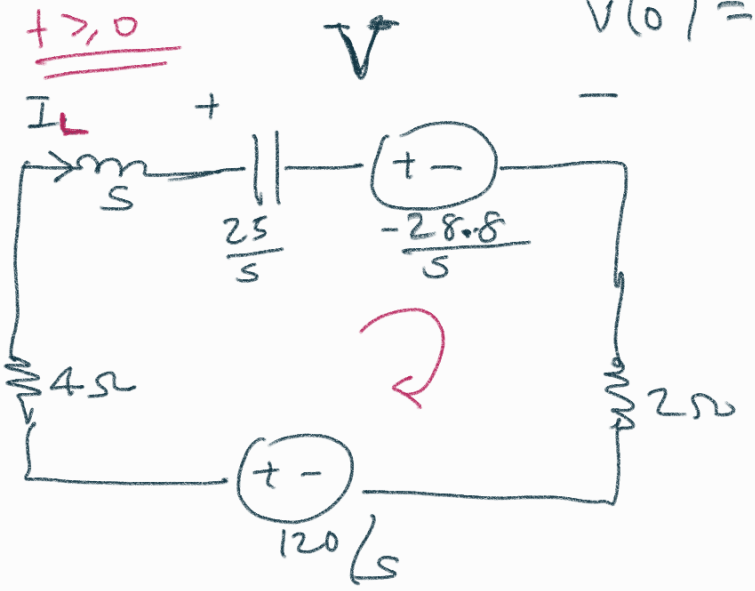

$$I_L\left(s + \frac{25}{s} + 6\right) - \frac{28.8}{s} - \frac{120}{s} = 0$$

$$I_L = \frac{\frac{148.8}{\cancel{s}}}{\frac{s^2 + 6s + 25}{\cancel{s}}} \qquad \frac{148.8}{(s+3-4j)(s+3+4j)}$$

$$\frac{-6 \mp \sqrt{36-100}}{2} = \frac{-6 \mp 8j}{2} = -3 \mp 4j$$

$$= \frac{148.8 \; \frac{1}{4} \cdot 4}{(s+3)^2 + 4^2} \xrightarrow{\mathcal{L}^{-1}} 37.2\, e^{-3t} \sin(4t)\, u(t)$$

$$V = \frac{25}{s} I_L - \frac{28.8}{s}$$

$$= \frac{25 \times 148.8}{s(s^2+6s+25)} - \frac{28.8}{s}$$

$$\frac{14880}{4}$$
$$3720$$

$$= \frac{3720}{s(s+3-4j)(s+3+4j)} - \frac{28.8}{s}$$

$$= \frac{K_1}{s} + \frac{K_2}{s+3-4j} + \frac{K_2^*}{s+3+4j} - \frac{28.8}{s}$$

$$K_1 = \frac{3720}{25} = 148.8 \quad , \quad K_2 = \frac{3720}{(-3+4j)\,8j} = \frac{3720}{5\angle 127^\circ \; 8\angle 90^\circ} = 93\angle -217^\circ = 93\angle 143^\circ$$

$$= \frac{148.8}{s} + \frac{93\angle 143^\circ}{s+3-4j} + \frac{93\angle -143^\circ}{s+3+4j} - \frac{28.8}{s}$$

$$v(t) = \left(120 + 186\, e^{-3t} \cos(4t + 143^\circ)\right) u(t)$$

16.35 Find $v_o(t)$ in the circuit of Fig. 16.58.

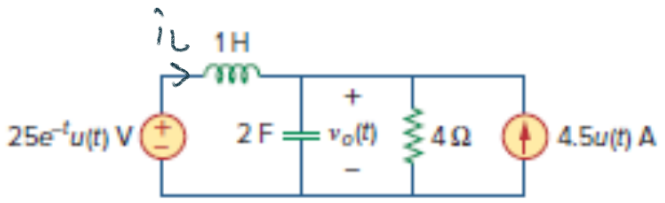

$t = 0^-$

$v_o(0^-) = 0$

$i_L(0^-) = 0$

Figure 16.58
For Prob. 16.35.

$t \geq 0$

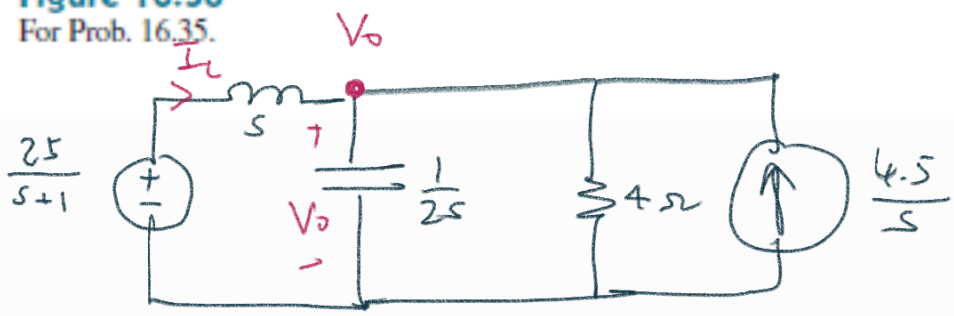

D.G.V.

$$\frac{V_o - \frac{25}{s+1}}{s} + V_o\, 2s + \frac{V_o}{4} = \frac{4.5}{s}$$

$$V_o\left(\frac{1}{s} + 2s + \frac{1}{4}\right) = \frac{25}{s(s+1)} + \frac{4.5}{s}$$

$$V_o\left(\frac{8s^2+s+4}{4\cancel{s}}\right) = \frac{25 + 4.5s + 4.5}{\cancel{s}(s+1)}$$

$$V_o = \frac{18s+118}{(s+1)(8s^2+s+4)} = \frac{18s+118}{8(s+1)\left(s^2+\frac{1}{8}s+\frac{1}{2}\right)}$$

$$\frac{-\frac{1}{8} \mp \sqrt{\frac{1}{64}-2}}{2} \simeq -\frac{1}{16} \mp \frac{\sqrt{2}\,j}{2}$$

$$= \frac{K_1}{s+1} + \frac{K_2 s + K_3}{s^2+\frac{s}{8}+\frac{1}{2}}$$

$$\rightarrow K_1 = \frac{100}{8\left(1-\frac{1}{8}+\frac{1}{2}\right)} = \frac{100}{11} \checkmark = 9.1$$

$$K_1 s^2 + \frac{K_1}{8}s + \frac{K_1}{2} + K_2 s^2 + K_3 s + K_2 s + K_3 = \frac{18s+118}{8}$$

$$K_1 + K_2 = 0 \longrightarrow K_2 = \frac{-100}{11} \checkmark = -9.1$$

$$\frac{100}{88} - \frac{100}{11} + K_3 = \frac{18}{8} \Rightarrow K_3 = \frac{18}{8} + \frac{700}{88} = 10.2$$

$$\frac{K_1}{2} + K_3 = \frac{55}{11} + 10.2 \overset{?}{=} \frac{118}{8}$$

$$\frac{9.1}{s+1} + \frac{-9.1s + 10.2}{\left(s+\frac{1}{16}\right)^2 + \frac{1}{2}}$$

$$\frac{9.1}{s+1} + \frac{-9.1\left(s+\frac{1}{16}\right) + 10.77}{\left(s+\frac{1}{16}\right)^2 + \frac{1}{2}} \qquad 10.77\sqrt{2}\ \frac{1}{\sqrt{2}}$$

$$\xrightarrow{\mathcal{L}^{-1}} 9.1e^{-t} - 9.1e^{-\frac{t}{16}}\cos\left(\frac{1}{\sqrt{2}}t\right) + 10.77\sqrt{2}\,e^{-\frac{t}{16}}\sin\left(\frac{1}{\sqrt{2}}t\right)$$

16.42 Given the circuit in Fig. 16.65, find $i(t)$ and $v(t)$ for $t > 0$.

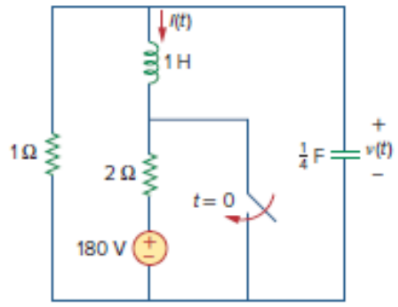

Figure 16.65
For Prob. 16.42.

$t = 0^-$

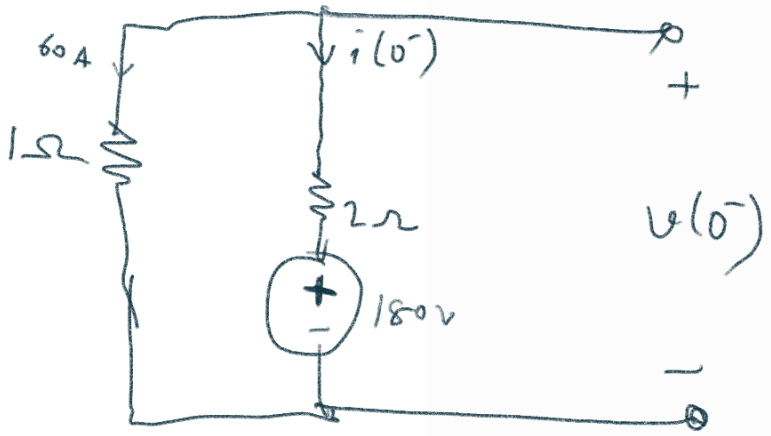

$$i(0^-) = -60 \text{ A}$$

$$v(0^-) = 60 \text{ V}$$

$t \geq 0$:

$$v_L = L\frac{di_L}{dt} \xrightarrow{\mathcal{L}} V_L = sLI_L - Li_0$$

$$I_L = \frac{V_L + Li_0}{sL}$$

$$I_L = \frac{V_L}{sL} + \frac{i_0}{s}$$

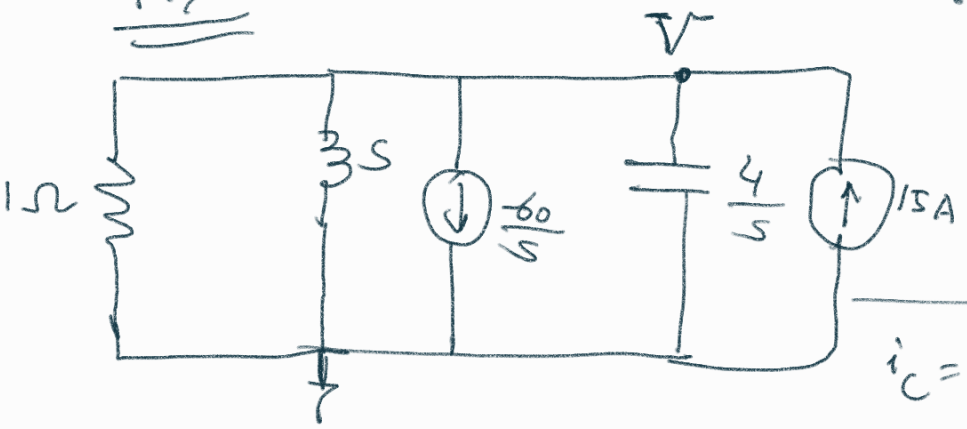

$$i_C = C\frac{dv_C}{dt} \xrightarrow{\mathcal{L}} I_C = sCV_C - Cv_0$$

$$\frac{V}{1} + \frac{V}{s} - \frac{60}{s} + \frac{Vs}{4} = 15$$

$$V\left(1 + \frac{1}{s} + \frac{s}{4}\right) = \frac{60}{s} + 15$$

$$V \cdot \frac{s^2 + 4s + 4}{4\cancel{s}} = \frac{15s + 60}{\cancel{s}}$$

$$V = \frac{60(s+4)}{(s+2)^2} = \frac{K_1}{(s+2)^2} + \frac{K_2}{s+2}$$

$K_1 \to 120$, $K_2 \to 60$

$$K_2 = 60(-2+4) = 120$$

$$K_2 = \left\{\frac{d}{ds} 60(s+4)\right\}\Big|_{s=-2} = 60$$

$$v(t) = \left(120te^{-2t} + 60e^{-2t}\right)u(t)$$

16.48 Find $V_x(s)$ in the circuit shown in Fig. 16.71.

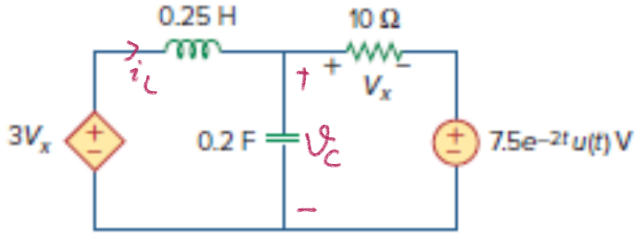

Figure 16.71
For Prob. 16.48.

$t = 0^-$

$v_C(0^-) = 0$

$i_L(0^-) = 0$

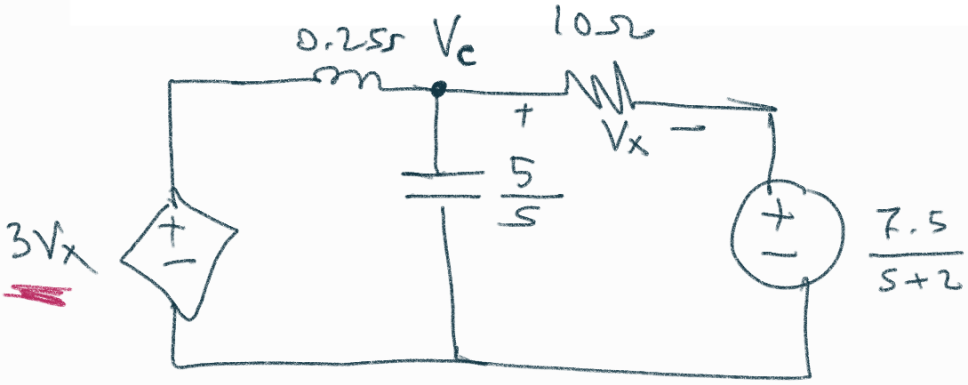

(1) $$\frac{V_c - 3V_x}{0.25s} + \frac{V_c s}{5} + \frac{V_c - \frac{7.5}{s+2}}{10} = 0$$

(2) $$V_x = V_c - \frac{7.5}{s+2}$$

$$40V_c - 120V_x + 2s^2 V_c + sV_c - \frac{7.5s}{s+2} = 0$$

$$V_c(2s^2 + s + 40) = 120V_x + \frac{7.5s}{s+2}$$

$$V_c(2s^2 + s + 40) = 120V_c - \frac{120 \times 7.5}{s+2} + \frac{7.5s}{s+2}$$

$$V_c(2s^2 + s - 80) = \frac{7.5}{s+2}(s - 120)$$

$$V_c = \frac{7.5(s-120)}{2(s+2)(s^2 + \frac{s}{2} - 40)}$$

ihmal

$$\frac{-\frac{1}{2} \mp \sqrt{\cancel{\frac{1}{4}} + 160}}{2}$$

$$\frac{-1}{4} \mp 2\sqrt{10}$$

bir kök pozitif olduğundan V_c sonsuza gider.

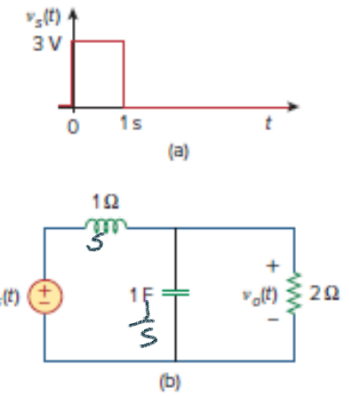

Figure 16.80
For Prob. 16.57.

$$\boxed{3u(t) - 3u(t-1) \xrightarrow{\mathcal{L}} \frac{3}{s} - \frac{3e^{-s}}{s}}$$

$$\frac{3}{s}(1-e^{-s}) \cdot \frac{2 /\!/ \frac{1}{s}}{s + \left(2 /\!/ \frac{1}{s}\right)} = V_o(s)$$

$$= \frac{3}{s}(1-e^{-s}) \frac{\frac{\frac{2}{\cancel{s}}}{\frac{2s+1}{\cancel{s}}}}{s + \frac{\frac{2}{\cancel{s}}}{\frac{2s+1}{\cancel{s}}}} = \frac{3}{s}(1-e^{-s}) \frac{\frac{2}{2s+1}}{s + \frac{2}{2s+1}}$$

$$= \frac{3}{s}(1-e^{-s}) \frac{\frac{2}{\cancel{2s+1}}}{\frac{2s^2+s+2}{\cancel{2s+1}}} = \frac{6(1-e^{-s})}{s(2s^2+s+2)} = \frac{3(1-e^{-s})}{s\underbrace{\left(s^2+\frac{1}{2}s+1\right)}}$$

$$\left(s_{1,2} = \frac{-\frac{1}{2} \mp \sqrt{\frac{1}{4}-4}}{2} \right)$$

$$= -\frac{1}{4} \mp \sqrt{\frac{1}{16}-1} = -\frac{1}{4} \mp \sqrt{\frac{-15}{16}}$$

$$= -0.25 \mp j0.97$$

$$\cong -0.25 \mp j$$

$$\frac{3}{\underbrace{s(s+0.25-j)(s+0.25+j)}} - \frac{3e^{-s}}{s(s+0.25-j)(s+0.25+j)}$$

$$\frac{K_1}{s} + \frac{K_2}{s+0.25-j} + \frac{K_2^*}{s+0.25+j}$$

$$K_1 = \frac{3}{0.25^2+1^2} = 2.82$$

$$K_2 = \frac{3}{(-0.25+j)(2j)} = \frac{-3}{+2+0.5j} = 1.46\angle 14^\circ = 1.46\angle -166^\circ$$

$$\left(2.82 + 2.92e^{-0.25t}\cos(t-166^\circ)\right)u(t)$$

$$- \left(2.82 + 2.92e^{-0.25(t-1)}\cos((t-1)-166^\circ)\right)u(t-1)$$

16.66 For the op amp circuit in Fig. 16.89, find $v_0(t)$ for $t > 0$. Take $v_s = 12\,e^{-5t}\,u(t)$ V. $\longrightarrow$ $V_s = \dfrac{12}{s+5}$

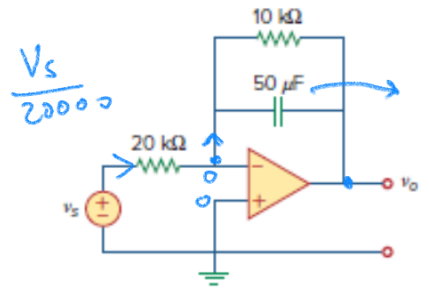

$\dfrac{V_s}{20000}$

$\dfrac{1}{s\,50\times10^{-6}} = \dfrac{20000}{s}$

Figure 16.89
For Prob. 16.66.

$$V_o = \frac{-V_s}{20000} \times \left(10000 \,//\, \frac{20000}{s}\right)$$

$$= \frac{-12}{\cancel{20000}(s+5)} \quad \frac{\frac{2\times\cancel{10^4}}{s}}{\cancel{10000} + \frac{\cancel{20000}}{s}}$$

$$= \frac{-12 \times \frac{2}{s}}{2(s+5)\left(1+\frac{2}{s}\right)} = \frac{\frac{-24}{\cancel{s}}}{2(s+5)\left(\frac{s+2}{\cancel{s}}\right)}$$

$$V_o(s) = \frac{-12}{(s+2)(s+5)}$$

$$V_o(s) = \frac{K_1}{s+2} + \frac{K_2}{s+5}$$

$K_1 = -4 \qquad K_2 = +4$

$$v_o(t) = \left(-4e^{-2t} + 4e^{-5t}\right)u(t)$$

$$\frac{V_o}{V_s} = H(s) \xrightarrow{\mathcal{L}^{-1}} h(t) \text{ dürtü tepkisi}$$

$$\delta(t) * \underbrace{h(t)}_{\text{dürtü tepkisi}} \xrightarrow{\mathcal{L}} \underbrace{\mathcal{L}\{\delta(t)\}}_{1}\, H(s) = H(s)$$

16.69 Find $I_1(s)$ and $I_2(s)$ in the circuit of Fig. 16.92.

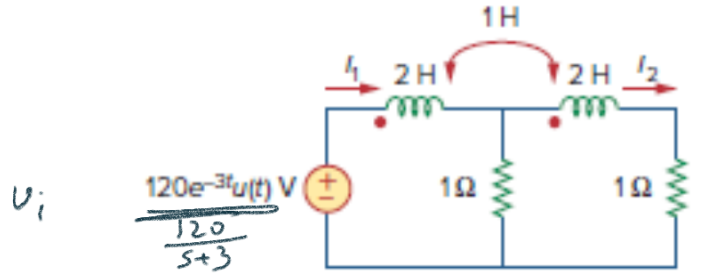

Figure 16.92
For Prob. 16.69.

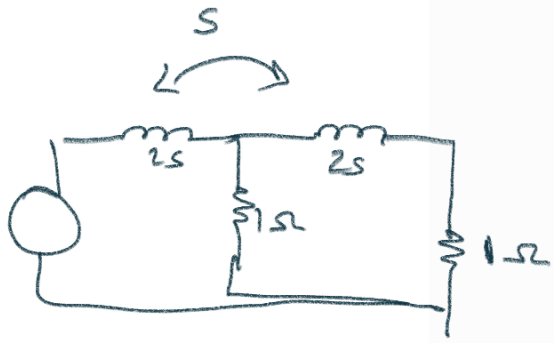

(1) $-v_i + 2i_1' + 1\,i_2' + 1(i_1 - i_2) = 0$

(2) $1(i_2 - i_1) + 2i_2' + 1\,i_1' + 1 \cdot i_2 = 0$

s-alanı:

(1) $-\frac{120}{s+3} + 2s I_1 + s I_2 + I_1 - I_2 = 0$

(2) $I_2 - I_1 + 2s I_2 + s I_1 + I_2 = 0$

(1) $(2s+1) I_1 + (s-1) I_2 = \frac{120}{s+3}$

(2) $(s-1) I_1 + (2s+2) I_2 = 0 \Rightarrow I_2 = \frac{-(s-1)}{2s+2} I_2$

(1) $\left[2s+1 - \frac{(s-1)^2}{2s+2}\right] I_1 = \frac{120}{s+3}$

$$\frac{4s^2 + 4s + 2s + 2 - s^2 + 2s - 1}{2(s+1)} I_1 = \frac{120}{s+3}$$

$$= I_1 = \frac{240(s+1)}{(s+3)(3s^2 + 8s + 1)}$$

$$= \frac{80(s+1)}{(s+3)\left(s^2 + \frac{8}{3}s + \frac{1}{3}\right)}$$

$$s_{1,2} = \frac{-\frac{8}{3} \mp \sqrt{\left(\frac{64}{9} - \frac{4}{3}\right)}}{2} = \frac{-\frac{8}{3} \mp \sqrt{\frac{52}{9}}}{2}$$

$$= \frac{-2.7 \mp 2.4}{2}$$

$$= -0.15, \; -2.55$$

$$i_1(t) = \frac{K_1}{s+3} + \frac{K_2}{s+0.15} + \frac{K_3}{s+2.55}$$

16.71 For the ideal transformer circuit in Fig. 16.94, determine $i_o(t)$.

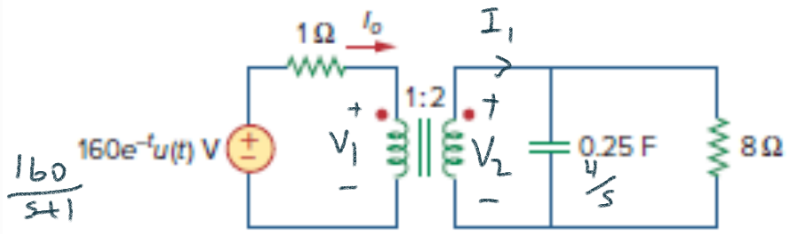

Figure 16.94
For Prob. 16.71.

$$V_2 = 2V_1$$
$$I_o = 2I_1$$

$$\rightarrow \quad \frac{160}{s+1} = 1 \cdot I_o + V_1$$

$$V_2 = I_1\left(\frac{4}{s} \,//\, 8\right) \Rightarrow 2V_1 = \frac{I_o}{2}\left(\frac{4}{s} \,//\, 8\right)$$

$$\frac{160}{s+1} = I_o + \frac{I_o}{4}\left(\frac{4}{s} \,//\, 8\right)$$

$$= I_o\left[1 + \frac{1}{4}\,\frac{\frac{32}{s}}{\frac{4}{s}+8}\right] = I_o\left[1 + \frac{1}{\cancel{4}}\,\frac{\cancel{32}^{\,8}}{8s+4}\right]$$

$$I_o = \frac{\frac{160}{s+1}}{\frac{8s+4+8}{8s+4}} = \frac{160}{s+1}\,\frac{8s+4}{8s+12}$$

$$I_o = \frac{80(2s+1)}{(s+1)(s+1.5)}$$

$K_1 = -160$

$K_2 = +320$

$$\boxed{i_o(t) = \left(-160e^{-t} + 320e^{-1.5t}\right)u(t)}$$

(Not: yansıyan empedans ile daha hızlı yapılabilirdi)

16.77 Obtain the transfer function $H(s) = V_o/V_s$ for the circuit of Fig. 16.96.

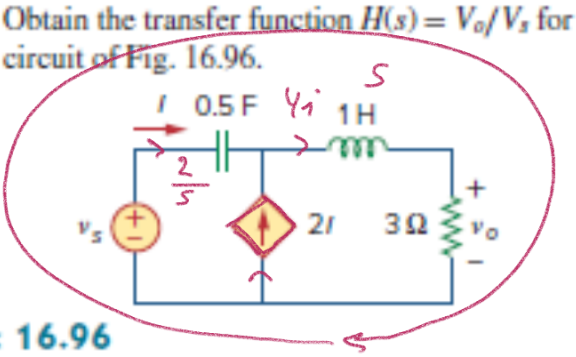

Figure 16.96
For Prob. 16.77.

$$-V_s + \frac{2}{s} I + s4I + 3I = 0$$

$$I = \frac{V_s}{\frac{2}{s} + 4s + 3}$$

$$V_o = 3I = \frac{3sV_s}{4s^2 + 3s + 2} \Rightarrow H(s) = \frac{V_o}{V_s} = \frac{3s}{4s^2 + 3s + 2}$$

16.85 A circuit has a transfer function

$$\boxed{H(s) = \frac{3(s+4)}{(s+1)(s+2)^2}} \qquad h(t) = ?$$

Find the impulse response.

$$x(t) \longrightarrow \boxed{h(t)} \longrightarrow y(t) \qquad y(t) = x(t) * h(t)$$

$$\frac{K_1}{s+1} + \frac{K_2}{(s+2)^2} + \frac{K_3}{s+2} \qquad Y(s) = X(s)\,H(s)$$

$K_1 \to 9$, $K_2 \to -6$, $K_3 \to -9$

$$K_1 = \frac{3 \times 3}{1} = 9 \qquad K_2 = \frac{3 \times 2}{-1} = -6$$

$$K_3 = \left(\frac{d}{ds} (s+2)^2 H(s) \right) \Big|_{s=-2} = \left[\frac{d}{ds} \frac{3(s+4)}{s+1} \right]_{s=-2}$$

$$= \frac{3(s+1) - 3(s+4)}{(s+1)^2} \Bigg|_{s=-2}$$

$$= \frac{-3-6}{1} = -9$$

$$h(t) = \left(9e^{-t} - 6te^{-2t} - 9e^{-2t}\right) u(t)$$

16.90 Develop the state equations for the circuit shown in Fig. 16.104.

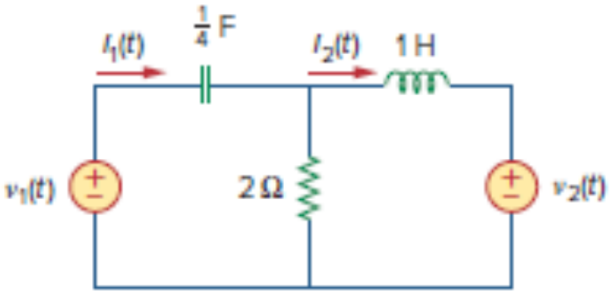

Figure 16.104
For Prob. 16.90.

$$\bar{X}' = AX + B\bar{u}$$
$$\bar{Y} = CX + D\bar{u}$$

16.97 A system is formed by cascading two systems as shown in Fig. 16.106. Given that the impulse responses of the systems are

$$h_1(t) = 21e^{-t}u(t), \qquad h_2(t) = e^{-4t}u(t)$$

(a) Obtain the impulse response of the overall system.

(b) Check if the overall system is stable.

Figure 16.106
For Prob. 16.97.

$h_{eş}(t)$

$$H_{eş}(s) = H_1(s)\,H_2(s)$$
$$= \frac{21}{s+1}\,\frac{1}{s+4}$$ Tranfer fonksiyonu

$$h_{eş}(t) = \mathcal{L}^{-1}\{H_{eş}(s)\}$$

$$H_{eş}(s) = \frac{K_1}{s+1} + \frac{K_2}{s+4} \xrightarrow{\mathcal{L}} h_{eş}(t) = \left(7e^{-t} - 7e^{-4t}\right)u(t)$$

$K_1 \to 7$, $K_2 \to -7$

b) T.F. kutupları sol yarı düzlemde olduğundan sistem kararlıdır