***8.67** In the op amp circuit of Fig. 8.112, determine $v_o(t)$ for $t > 0$. Let $v_{in} = u(t)$ V, $R_1 = R_2 = 10$ kΩ, $C_1 = C_2 = 100$ μF. ?

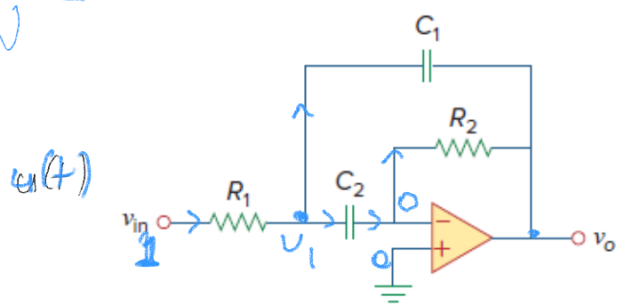

Figure 8.112
For Prob. 8.67.

$$\frac{1 - v_1}{R_1} = C_1 \frac{d(v_1 - v_o)}{dt} + C_2 \frac{dv_1}{dt}$$

$$C_2 \frac{dv_1}{dt} = -\frac{v_o}{R_2} \Rightarrow \boxed{-R_2 C_2 \frac{dv_1}{dt} = v_o}$$

$$\frac{1}{R_1} - \frac{v_1}{R_1} = C_1 \frac{dv_1}{dt} - C_1 \frac{dv_o}{dt} + C_2 \frac{dv_1}{dt}$$

$$\frac{1}{R_1} - \frac{v_1}{R_1} = C_1 \frac{dv_1}{dt} + R_2 C_1 C_2 \frac{d^2 v_1}{dt^2} + C_2 \frac{dv_1}{dt}$$

$$+R_2 C_1 C_2 \frac{d^2 v_1}{dt^2} + (C_1 + C_2) \frac{dv_1}{dt} + \frac{v_1}{R_1} = +\frac{1}{R_1}$$

$$\frac{d^2 v_1}{dt^2} + \underbrace{\frac{1}{R_2} \frac{C_1 + C_2}{C_1 C_2}}_{2\alpha} \frac{dv_1}{dt} + \underbrace{\frac{1}{R_1 R_2 C_1 C_2}}_{\omega_0^2} v_1 = \frac{1}{R_1 R_2 C_1 C_2}$$

$$\alpha = \frac{1}{2} \frac{1}{10^4} \frac{10^{-4} + 10^{-4}}{10^{-8}} = 1$$

$$\omega_0 = \sqrt{\frac{1}{10^4 \, 10^4 \, 10^{-4} \, 10^{-4}}} = 1$$

kritik sönümlü

$$v_1(t) = e^{-t}(A_1 t + A_2)$$

? ?

$t = 0^+$

$$v_1(0^+) - v_o(0^+) = v_{C_1}(0^+) = 0$$

$$v_1(0^+) = v_{C_2}(0^+) = 0$$

$$v_o(0^+) = 0$$

$$\boxed{v_1(0^+) = A_2 = 0}$$

$$v_o(t) = -R_2C_2\frac{dv_1}{dt} = -R_2C_2\left[-e^{-t}(A_1t + \overset{0}{A_2}) + e^{-t}A_1\right]$$

$$v_o(0^+) = -R_2C_2A_1 = 0$$

$$\underline{\underline{A_1 = 0}}$$

$$v_o(t) = -R_2C_2\left[-e^{-t}(A_1t + A_2) + e^{-t}A_1\right]$$

$$v_o(0) = -R_2C_2\left[-A_2 + A_1\right] = 0 \qquad \boxed{A_1 = A_2}$$

9.7 If $f(\phi) = \cos\phi + j\sin\phi$, show that $f(\phi) = e^{j\phi}$.

9.8 Calculate these complex numbers and express your results in rectangular form:

(a) $\dfrac{60\angle 45^\circ}{7.5 - j10} + j2$

(b) $\dfrac{32\angle -20^\circ}{(6 - j8)(4 + j2)} + \dfrac{20}{-10 + j24}$

(c) $20 + (16\angle -50^\circ)(5 + j12)$

a) $\dfrac{60\angle 45^\circ}{12.5\angle -53^\circ} + j2 = 4.8\angle 98^\circ + j2$

$4.8\cos(98^\circ) + j4.8\sin(98^\circ) + j2$

$= -0.67 + j4.75 + j2$

$= -0.67 + j6.75$

b) $\dfrac{32\angle -20^\circ}{(6 - j8)(4 + j2)} + \dfrac{20}{-10 + j24}$

$$\frac{32\cos(-20^\circ)+j\,32\sin(-20)}{24+j12-j32+16} + \frac{20}{-10+j24}$$

$$\frac{30-j11}{40-j20} + \frac{20}{-10+j24}$$

$$\frac{(30-j11)(40+j20)}{(40-j20)(40+j20)} + \frac{20(-10-j24)}{(-10+j24)(-10-j24)}$$

$$\frac{1200+j600-j440+220}{1600+400} + \frac{-200-j480}{100+576}$$

$$\frac{1420+j160}{2000} + \frac{-200-j480}{676}$$

$$= 0.71+j0.08 - 0.30 - j0.71$$

$$= 0.41 - j0.63$$

9.9 Evaluate the following complex numbers and leave your results in polar form:

(a) $5\angle 30^\circ\left(6-j8+\dfrac{3\angle 60^\circ}{2+j}\right)$

(b) $\dfrac{(10\angle 60^\circ)(35\angle -50^\circ)}{(2+j6)-(5+j)}$

a) $5\angle 30^\circ\left(6-j8+\dfrac{3\cos(60)+j3\sin(60)}{2+j}\right)$

$$5\angle 30^\circ\left(6-j8+\frac{(1.5+j2.6)(2-j)}{(2+j)(2-j)}\right)$$

$$=5\angle 30^\circ\left(6-j8+\frac{3-j1.5+j5.2+2.6}{5}\right)$$

$$=5\angle 30^\circ\left(6-j8+\frac{5.6+j3.7}{5}\right)=\angle 30^\circ(30-j40+5.6+j3.7)$$

$= \angle 30^\circ \, (35.6 - j36.3)$

$= \angle 30^\circ \, \sqrt{35.6^2 + 36.3^2} \, \angle -\tan^{-1}\left(\frac{36.3}{35.6}\right)$

$= \angle 30^\circ \; 50.8 \; \angle -45.6^\circ$

$= 50.8 \angle -15.6^\circ$

9.12 Let $\mathbf{X} = 4\angle 40^\circ$ and $\mathbf{Y} = 20\angle -30^\circ$. Evaluate the following quantities and express your results in polar form:

(a) $(\mathbf{X} + \mathbf{Y})\mathbf{X}^*$

(b) $(\mathbf{X} - \mathbf{Y})^*$

(c) $(\mathbf{X} + \mathbf{Y})/\mathbf{X}$

$X^* = 4\angle -40^\circ$

$X = 4e^{j40^\circ}$

$X^* = 4e^{-j40^\circ}$

a) $(X+Y)X^* = (4\angle 40^\circ + 20\angle -30^\circ)\,4\angle -40^\circ$

$= (3.06 + j2.57 + 17.3 - j10)\,(4\angle -40^\circ$

$= (20.36 - j7.43)\,4\angle -40^\circ$

$= 21.7\angle -20^\circ \; 4\angle -40^\circ$

$= 86.8\angle -60^\circ$

9.16 Transform the following sinusoids to phasors:

(a) $-20\cos(4t + 135^\circ)$ (b) $8\sin(20t + 30^\circ)$

(c) $20\cos(2t) + 15\sin(2t)$

rad/sn derece

a) $-20\angle 135^\circ = 20\angle -180 \; \angle 135^\circ$

$= 20\angle -45^\circ$

b) $8\sin(20t + 30^\circ) = 8\cos(20t + 30^\circ - 90^\circ)$

$= 8\cos(20t - 60^\circ) \xrightarrow{P} 8\angle -60^\circ$

c)

c) $20\cos(2t+0^\circ) + 15\sin(2t+0^\circ) = 20\cos(2t) + 15\cos(2t-90^\circ)$

$$\xrightarrow{P} 20\angle 0^\circ + 15\angle -90^\circ$$

$$20 + \cancel{15\cos(-90^\circ)} + j15\underbrace{\sin(-90^\circ)}_{-1}$$

$$= 20 - j15 = 25\angle -37^\circ$$

$$\downarrow P^{-1}$$

$$25\cos(2t - 37^\circ)$$

9.17 Two voltages v_1 and v_2 appear in series so that their sum is $v = v_1 + v_2$. If $v_1 = 10\cos(50t - \pi/3)$ V and $v_2 = 12\cos(50t + 30^\circ)$ V, find v.

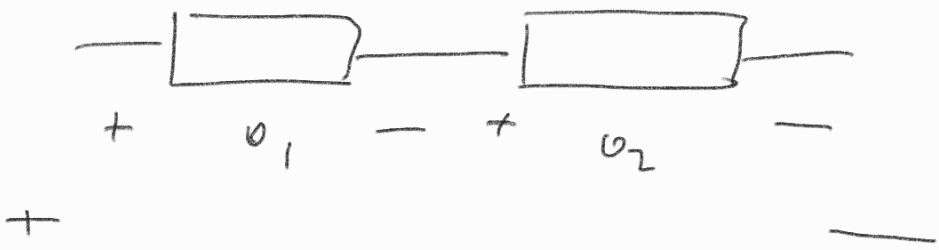

$$v = 10\cos(50t - 60^\circ) + 12\cos(50t + 30^\circ)$$

9.29

$v_c(0) = 2\cos(155^\circ)$ V

$C = 2\mu F$

$i(t) = 4\sin(10^6 t + 25^\circ)$ A

$v(t) = ?$

$$i(t) = C\frac{dv(t)}{dt}$$

$$\downarrow P$$

$$\bar{I} = j\omega C\bar{V}$$

✓ ✓ ✓ ?

$i(t) = 4\cos(10^6 t - 65^\circ)$ A

$\bar{I} = 4\angle -65^\circ$

$$\bar{V} = \frac{\bar{I}}{j\omega C} = \frac{4\angle -65^\circ}{j10^6 \times 2\times10^{-6}} = \frac{4\angle -65^\circ}{2\angle 90^\circ}$$

$\bar{V} = 2\angle -155^\circ$ V

$$\bar{V} \xrightarrow{P^{-1}} v(t) = 2\cos(10^6 t - 155^\circ) \text{ V}$$

$2j = 2\angle 90^\circ$

$\cancel{2\cos(90^\circ)}^{\to 0} + j2\cancel{\sin(90^\circ)}^{\to 1} = 2j$

9.30

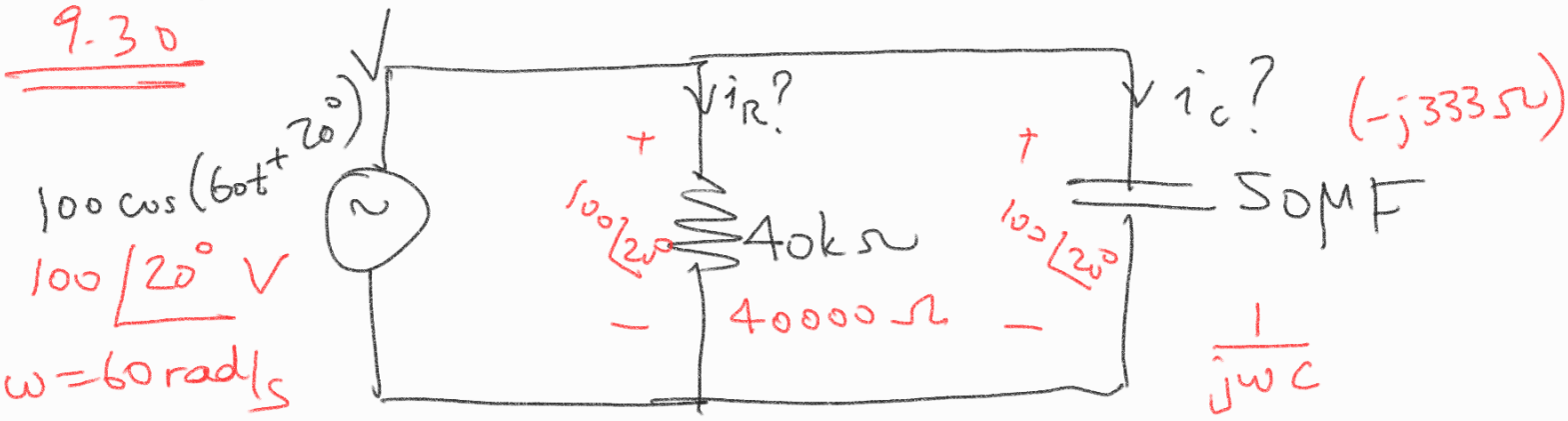

$$\frac{1}{j\omega C} = \frac{1}{j60\times50\times10^{-6}} = -\frac{j10^4}{30} = -\frac{j10^3}{3} = -j333$$

$$\bar{I}_R = \frac{100\angle 20^\circ}{40000} = 2.5\angle 20^\circ \text{ mA}$$

$i_R(t) = 2.5\cos(60t + 20^\circ)$ mA

$$\bar{I}_C = \frac{100\angle 20^\circ}{-j10^3/3} = \frac{100\angle 20^\circ}{10^3/3\,\angle -90^\circ} = 0.3\angle 110^\circ$$

$i_c(t) = 0.3\cos(60t + 110^\circ)$ //

9.34

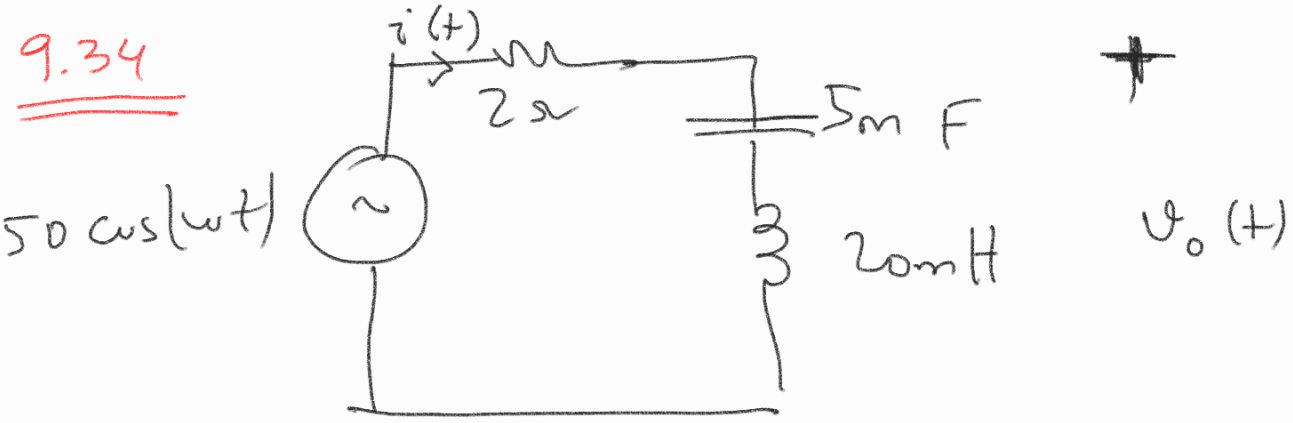

Hangi ω değeri için $v_o(t) = 0$ olur.

$$\bar{V}_o = \underbrace{\bar{I}\left(j\omega L + \frac{1}{j\omega C}\right)}_{\emptyset \text{ olmalı}} = 0 \quad (\text{hangi } \omega \text{ için?})$$

$$j\omega L + \frac{1}{j\omega C} = 0 \Rightarrow j\omega L - \frac{j}{\omega C} = 0$$

$$\cancel{j}\omega L = \frac{\cancel{j}}{\omega C}$$

$$\omega^2 = \frac{1}{LC} \text{ olmalı}$$

$$\omega = \frac{1}{\sqrt{LC}} \text{ olmalı} \quad (\text{rezonans frekansı})$$

$$\omega = \frac{1}{\sqrt{5\times10^{-3} \times 20\times10^{-3}}} = 100 \text{ rad/sn}$$

9.39 For the circuit shown in Fig. 9.46, find Z_{eq} and use that to find current **I**. Let $\omega = 10$ rad/s.

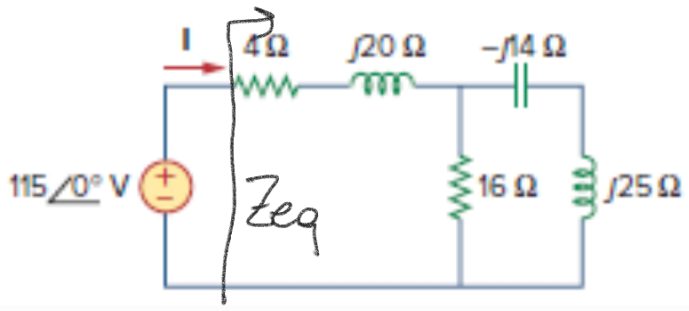

$$I = \frac{115\angle 0^\circ}{Z_{eq}}$$

$$Z_{eq} = 4 + j20 + (16 \,//\, j11)$$

$$= (4 + j20) + \frac{j\,226}{16 + j11}$$

$$= \frac{64 + j44 + j320 - 220 + j176}{16 + j11}$$

$$Z_{eq} = \frac{-156 + j540}{16 + j11} = \frac{562 \angle 180 - 73.9}{19.4 \angle 34.5} = 31.4 \angle 71.6$$

$$I = \frac{115 \angle 0^\circ}{31.4 \angle 71.6} = 3.66 \angle -71.6^\circ \text{ A}$$

$$i(t) = 3.66 \cos(10t - 71.6^\circ) \text{ A}$$

9.42 Calculate $v_o(t)$ in the circuit of Fig. 9.49.

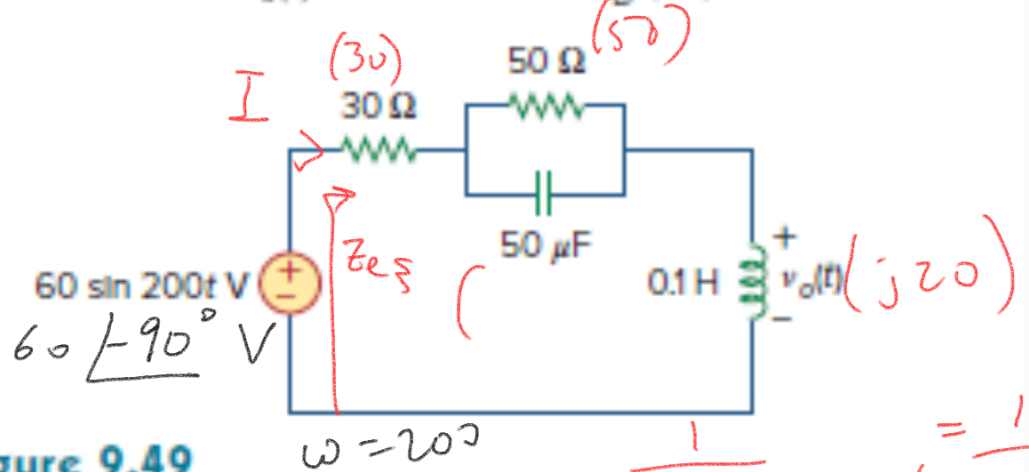

Figure 9.49
For Prob. 9.42.

$$\frac{1}{j200 \times 50 \times 10^{-6}} = \frac{10^6}{10000j} = \frac{100}{j} = -j100$$

$$Z_{eq} = 30 + (50 \,//\, -j100) + j20$$

$$= 30 + \frac{-j5000}{50 - j100} + j20 = \frac{150 - 300j - j500 + j100 + 200}{5 - j10}$$

$$= \frac{350 - j700}{5 - j10} = \frac{70 - j140}{1 - j2}$$

$$= 70$$

$$\bar{I} = \frac{60\angle -90^\circ}{70}\ A \Rightarrow \bar{V}_o = j20 \times \frac{60}{70}\angle -90^\circ$$

$$= 20\angle 90^\circ \times \frac{60}{70} \times \angle -90^\circ$$

$$\bar{V}_o = \frac{120}{7}\ V$$

$$\boxed{v_o(t) = \frac{120}{7}\cos(200t)\ V}$$

9.43 Find current $\mathbf{I}_o$ in the circuit shown in Fig. 9.50.

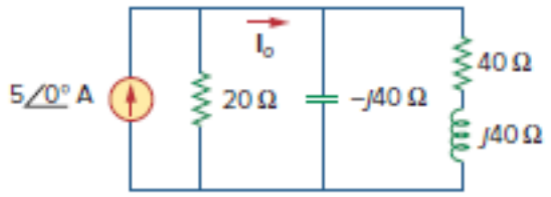

Figure 9.50
For Prob. 9.43.

9.51 If the voltage v_o across the 2-Ω resistor in the circuit of Fig. 9.58 is 90 cos 2t V, obtain i_s.

$\frac{1}{j0.1\times 2} =$ $-j5$ (j)

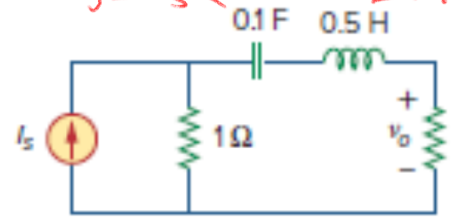

Figure 9.58
For Prob. 9.51.

$\omega = 2\ rad/sec$

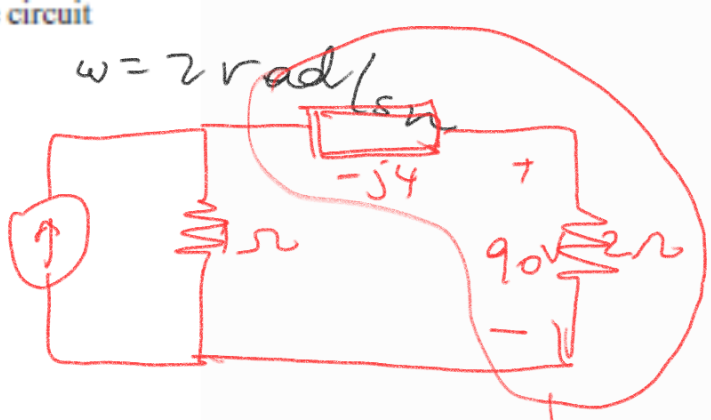

$2-j4$

$$\frac{I \times 1}{3-j4} \times 2 = 90$$

$$I_s = 45\times(3-j4) = 45\times 5\angle -53^\circ$$

$$= 225\angle -53^\circ$$

$$i_s(t) = 225\cos(2t - 53^\circ)\ A$$

9.61 Find $\mathbf{Z}_{eq}$ in the circuit of Fig. 9.68.

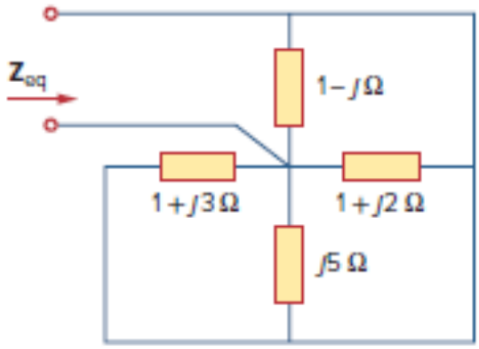

Figure 9.68
For Prob. 9.61.

$$Z_{eq} = 1-j \,//\, 1+j2 \,//\, j5 \,//\, 1+j3$$

$$= \left(\frac{1}{1-j} + \frac{1}{1+j2} + \frac{1}{j5} + \frac{1}{1+j3}\right)^{-1}$$

$$= \frac{1+j}{2} + \frac{1-j2}{5} - j0.2 + \frac{1-j3}{10}$$

$$= 0.5 + 0.5j + 0.2 - j0.4 - j0.2 + 0.1 - j0.3$$

$$= 0.8 - j0.4$$

$$\cong 0.4\sqrt{5}\,\angle -26^\circ$$

9.62 For the circuit in Fig. 9.69, find the input impedance $\mathbf{Z}_{in}$ at 10 krad/s.

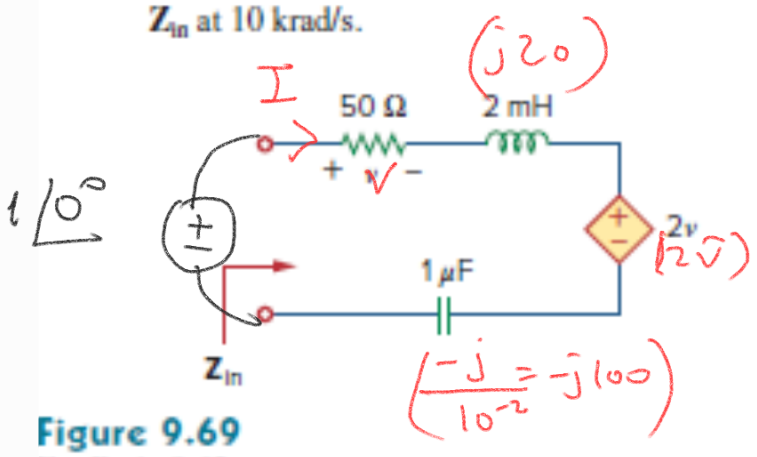

bağımlı kaynak olduğundan buradan girse bir gerilim bağlanır.

$V = 50I$

Figure 9.69
For Prob. 9.62.

$$-1 + 50I + j20I + 2V - j100I = 0$$

$$-1 + 50I + j20I + 100I - j100I = 0$$

$$\boxed{1 = (150 - j80)\,\bar{I}} \qquad \bar{I} = \frac{1}{150 - j80}$$

$$Z_{in} = \frac{V_{in}}{I} = \frac{1\angle 0^\circ}{1/150 - j80} = 150 - j80\ \Omega$$

9.91 Figure 9.91 shows a series combination of an inductance and a resistance. If it is desired to connect a capacitor in parallel with the series combination such that the net impedance is resistive at 10 kHz, what is the required value of C?

10 krad/s direln

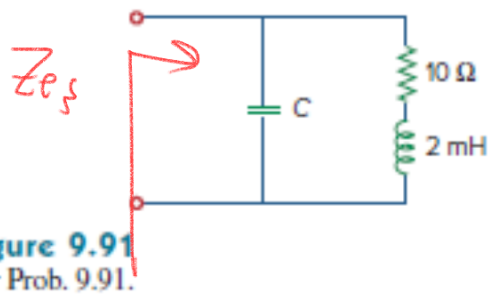

Figure 9.91
For Prob. 9.91.

9.66 For the circuit in Fig. 9.73, calculate $\mathbf{Z}_T$ and $\mathbf{V}_{ab}$.

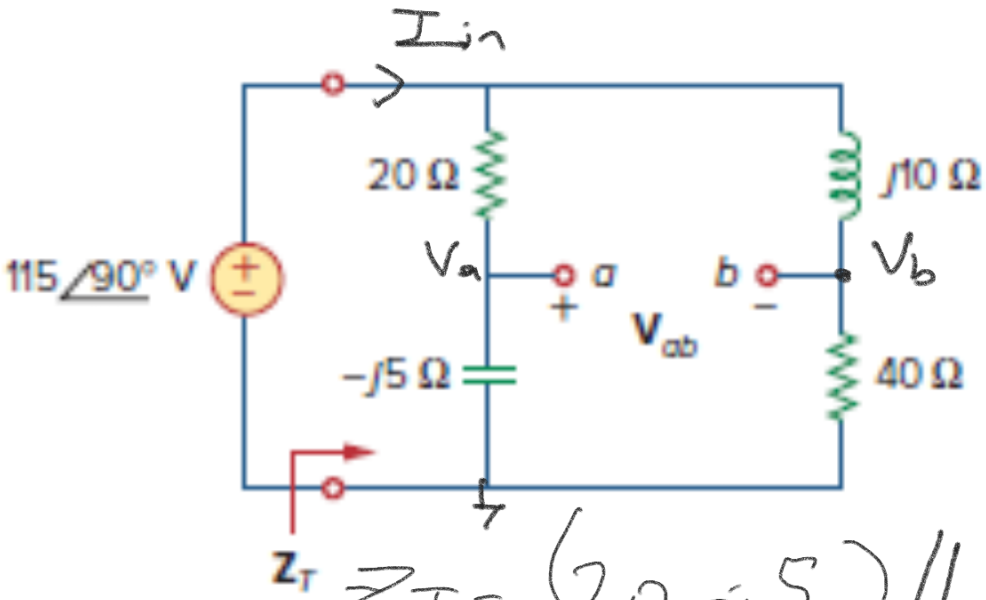

Figure 9.73
For Prob. 9.66.

$$Z_T = (20 - j5) \,//\, (40 + j10)$$

$$= \frac{(20 - j5)(40 + j10)}{60 + j5}$$

$$= \frac{800 + \cancel{j200 - j200} + 50}{60 + j5}$$

$$= \frac{850}{60 + j5} = \frac{170}{12 + j} = \frac{170}{\sqrt{145}\,\angle 4.76} = 14.12\,\angle -4.76\ \Omega$$

$$V_{ab} = V_a - V_b$$

$$V_a = 115\angle 90^\circ \; \frac{-j5}{20-j5}$$

$$V_b = 115\angle 90^\circ \; \frac{40}{40+j10}$$

$$V_{ab} = 115\angle 90^\circ \left(\frac{-j5}{20-j5} - \frac{40}{40+j10} \right)$$

$$= 115\angle 90^\circ \left(\frac{\cancel{-j200} + 50 - 800 + \cancel{j200}}{(20-j5)(40+j10)} \right)$$

$$= 115\angle 90^\circ \; \frac{-750}{850} = 115\angle 90^\circ \; \frac{-15}{17}$$

$$= -101.47\angle 90^\circ$$

$$= 101.47\angle -90^\circ \text{ V}$$

9.72 Calculate the value of $\mathbf{Z}_{ab}$ in the network of Fig. 9.79.

ML

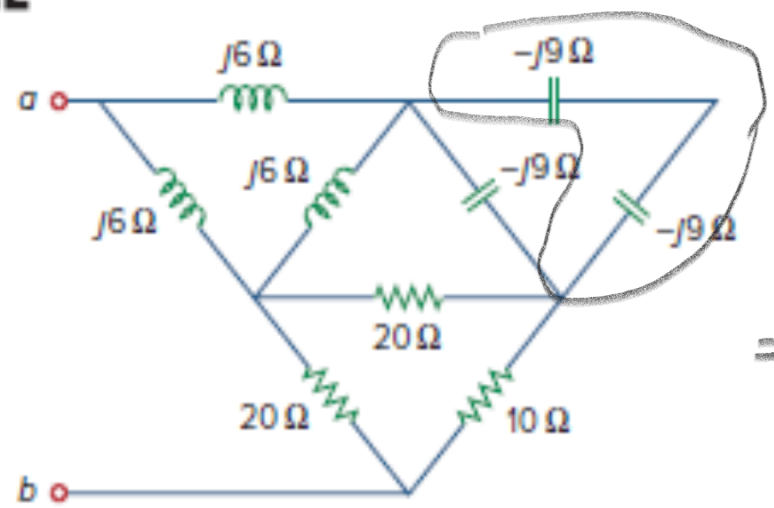

$-j18\ \Omega$

$$= \frac{(+j9)(+j18)}{-27}$$

$$= -j6\ \Omega$$

Figure 9.79
For Prob. 9.72.

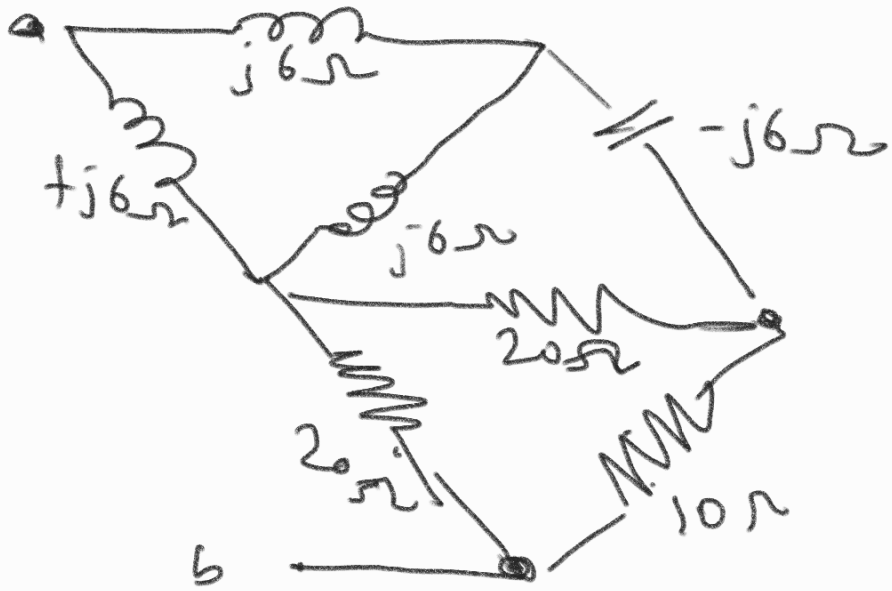

$$\frac{j6(-j6)}{20} = \frac{36}{20}$$

$$\frac{-j6 \times 20}{20 - j6 - j6}$$

$$\frac{+j6 \times 20}{20}$$

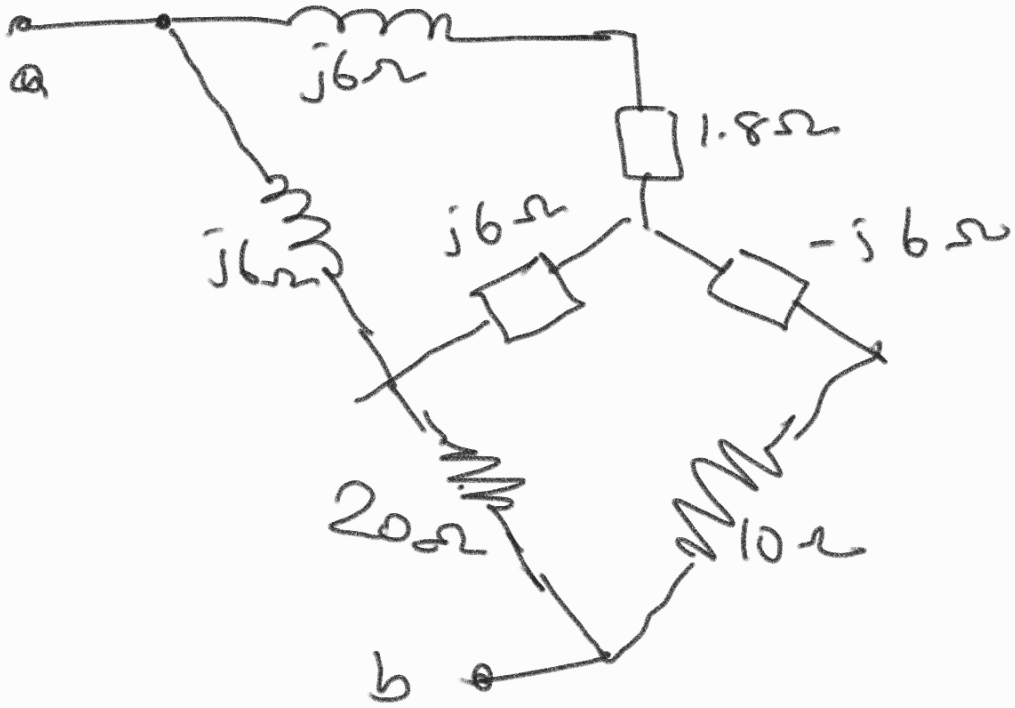

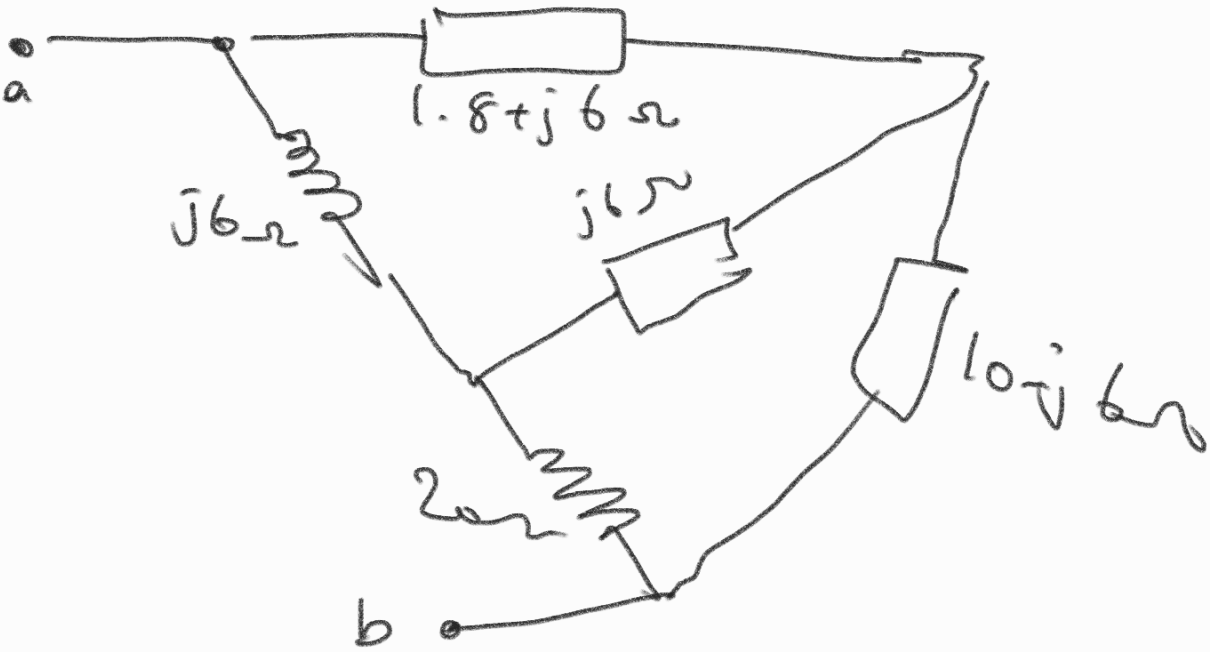

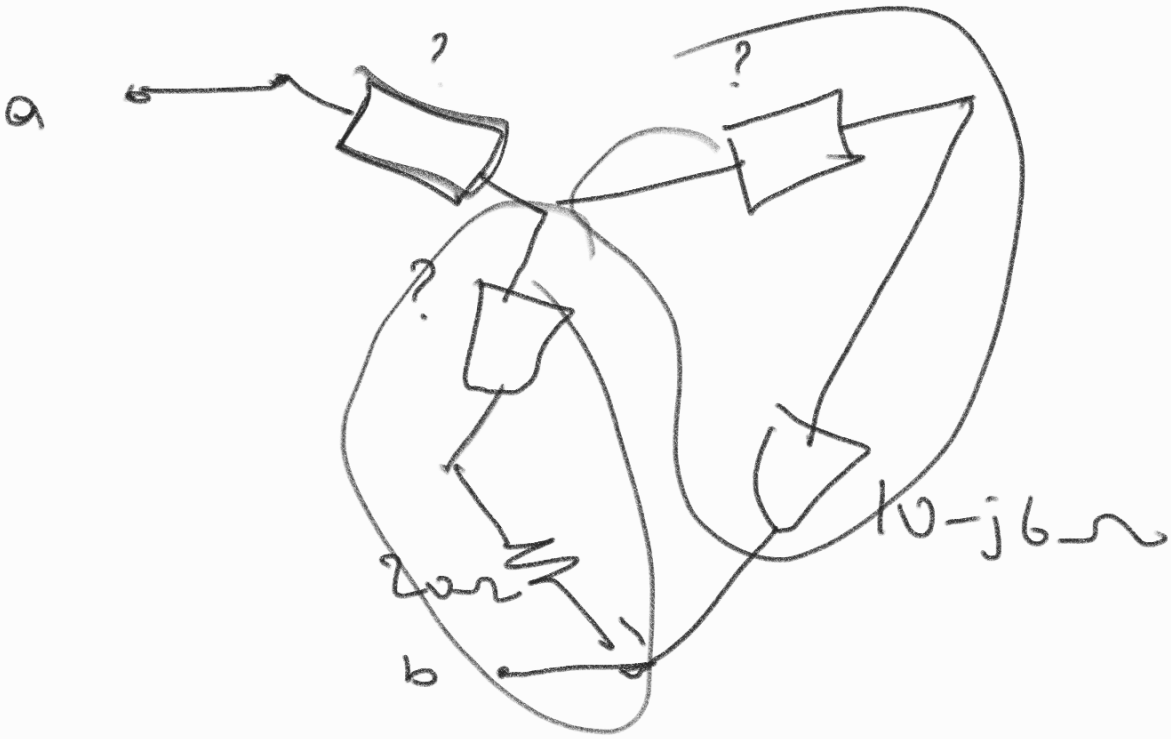

9.80 Consider the phase-shifting circuit in Fig. 9.83. Let $\mathbf{V}_i = 120$ V operating at 60 Hz. Find:

120π rad/sn $= \omega$

(a) $\mathbf{V}_o$ when R is maximum
(b) $\mathbf{V}_o$ when R is minimum
(c) the value of R that will produce a phase shift of 45°

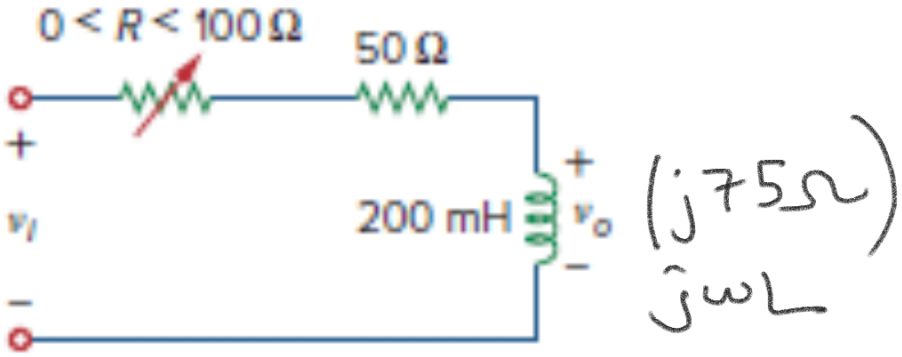

a)

Figure 9.83

R = 100Ω :

$$V_o = V_i \times \frac{j75}{150+j75} = V_i \frac{75\angle 90^\circ}{75\sqrt{5}\angle 26^\circ}$$

$$= \frac{V_i}{\sqrt{5}} \angle 64^\circ$$

V_o, V_i'den 64° ileride.

b) R = 0 Ω :

$$V_o = V_i \times \frac{j75}{50+j75}$$

$$V_o = V_i \times \frac{j3}{2+j3} = V_i \frac{3\angle 90^\circ}{\sqrt{13}\angle \tan^{-1}(3/2)}$$

$$= V_i \frac{3}{\sqrt{13}} \angle 90^\circ - 56.3^\circ$$

$$= V_i \frac{3}{\sqrt{13}} \angle 33.7^\circ$$

V_o, V_i'den 33.7° ileride.

c) 45° için R?

$$V_o = V_i \underbrace{\frac{j75}{R+50+j75}}$$

Bunun açısının 45° olmasını istiyoruz.

O zaman $R+50+j75$ karmaşık sayısının açısının 45° olması gerekir.

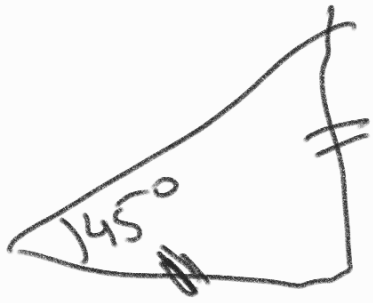

$$R+50 = 75$$

$$R = 25\,\Omega$$

olmalı.

9.93 A power transmission system is modeled as shown in Fig. 9.92. Given the source voltage and circuit elements

$\mathbf{V}_s = 115\angle 0^\circ$ V, source impedance

$\mathbf{Z}_s = (1 + j0.5)\ \Omega$, line impedance

$\mathbf{Z}_\ell = (0.4 + j0.3)\ \Omega$, and load impedance

$\mathbf{Z}_L = (23.2 + j18.9)\ \Omega$, find the load current $\mathbf{I}_L$.

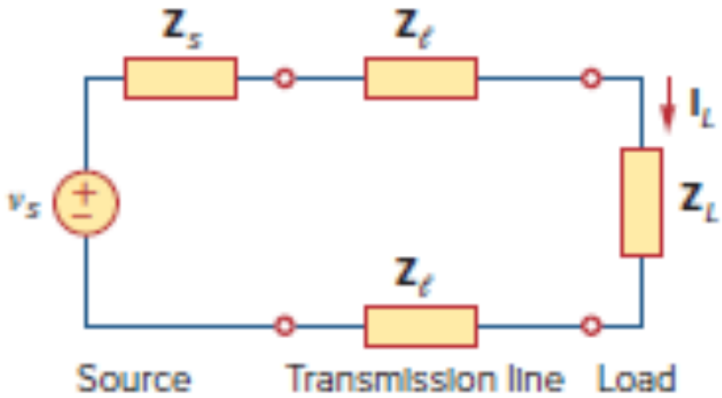

Figure 9.92
For Prob. 9.93.

$$Z_{eq} = Z_s + 2Z_\ell + Z_L$$

$$= 1 + j0.5 + 0.8 + j0.6 + 23.2 + j18.9$$

$$= 25 + j20\ \Omega$$

$$I_L = \frac{115\angle 0^\circ}{25 + j20} = \frac{23\angle 0^\circ}{5 + j4}$$

$$= \frac{23\angle 0^\circ}{\sqrt{41}\angle \tan^{-1}(0.8)} = \frac{23}{\sqrt{41}}\angle -38.7^\circ$$

$$\simeq 3.6\angle -38.7^\circ \text{ A}$$

Chapter 10

SİNÜSOİDAL YATIŞKIN DURUM ANALİZİ

10.7 Use nodal analysis to find **V** in the circuit of Fig. 10.56. → D.G.Y.

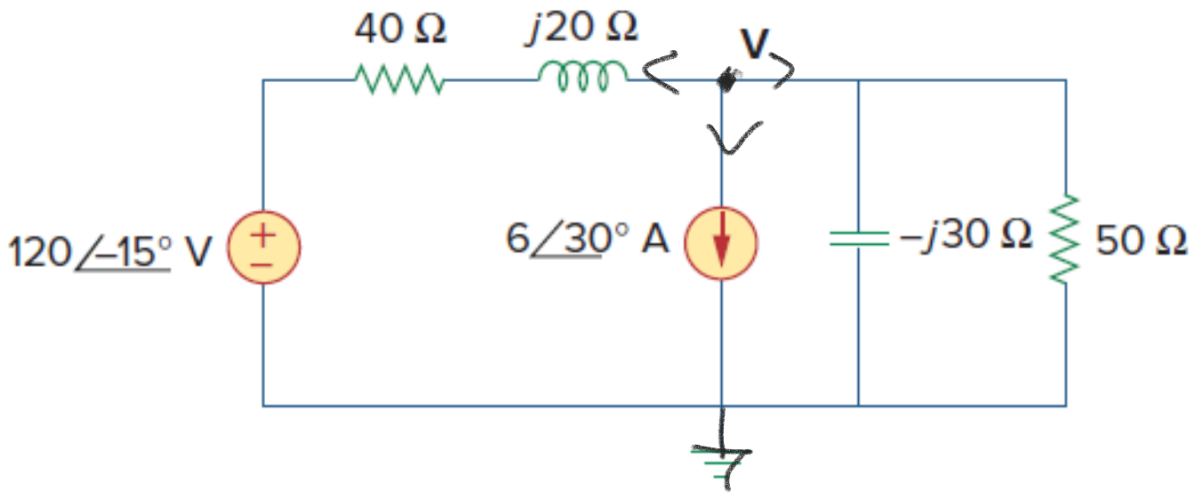

Figure 10.56
For Prob. 10.7.

$$\frac{V-120\angle -15^\circ}{40+j20}+\frac{V}{-j30}+\frac{V}{50}+6\angle 30^\circ=0$$

$$\frac{V}{40+j20}+\frac{V}{-j30}+\frac{V}{50}=\frac{120\angle -15^\circ}{40+j20}-6\angle 30^\circ$$

$$\frac{V(40-j20)}{\underset{(1.8)}{2000}}+\frac{Vj30}{\underset{(4)}{900}}+\frac{V}{\underset{(72)}{50}}=\frac{120\angle -15^\circ}{20\sqrt{5}\angle 26^\circ}-6\angle 30^\circ$$

$$V\left(\frac{72-j36+j120+72}{3600}\right)=2.68\angle -41^\circ-6\angle 30^\circ$$

$$V\left(\frac{144-j84}{3600}\right)=2.02-j1.75-5.2-j3$$

V bulunur.

10.10 Use nodal analysis to find v_o in the circuit of Fig. 10.59. Let $\omega = 2$ krad/s.

ML

$\frac{1}{+j\,2\times10^{-6}\times 2\times10^{3}}$

$-j250$

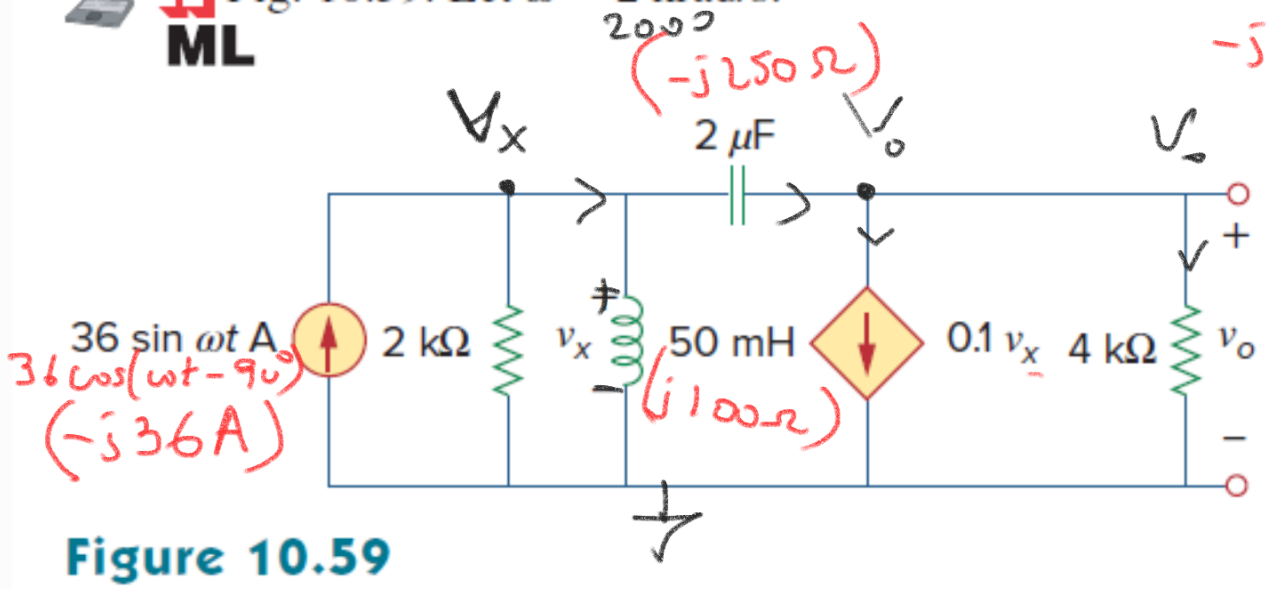

Figure 10.59
For Prob. 10.10.

(1) $$-j36 = \frac{V_x}{2000} + \frac{V_x}{j100} + \frac{V_x - V_o}{-j250}$$

(2) $$\frac{V_x - V_o}{-j250} = 0.1\,V_x + \frac{V_o}{4000}$$

(2) $$\frac{j16V_x - j16V_o}{\cancel{4000}} = \frac{400\,V_x}{\cancel{4000}} + \frac{V_o}{\cancel{4000}}$$

$$\boxed{V_o(1+j16) = V_x(400-j16)}$$

(1) $$\frac{-j72000}{\cancel{2000}} = \frac{V_x}{\cancel{2000}} - \frac{j20V_x}{\cancel{2000}} + \frac{j8V_x - j8V_o}{\cancel{2000}}$$

$$\boxed{-j72000 = V_x(1-j12) - j8V_o}$$

$$V_x = V_o\frac{(1+j16)}{400-j16} \quad (2)$$

$$-j72000 = V_o \frac{(1-j12)(1+j16)}{400-j16} - j8V_o$$

$$-j72000 = V_o\left[\frac{1+j16-j12+192}{400-j16} - j8\right]$$

$$= V_o\left[\frac{1+j4+192-j3200-128}{400-j16}\right]$$

$$-j72000 = V_o\left(\frac{65-j3196}{400-j16}\right)$$

$$V_o = \frac{-j72000\,(400-j16)}{65-j3196}$$

$$\cong \frac{72000\angle -90 \;\; 400\angle -2.29^\circ}{3196\angle -90^\circ}$$

$$\cong 9\angle -2.29^\circ$$

$$v_o = 9\cos(2000t - 2.29^\circ)\ \text{V}$$

10.23 Using nodal analysis obtain **V** in the circuit of Fig. 10.72.

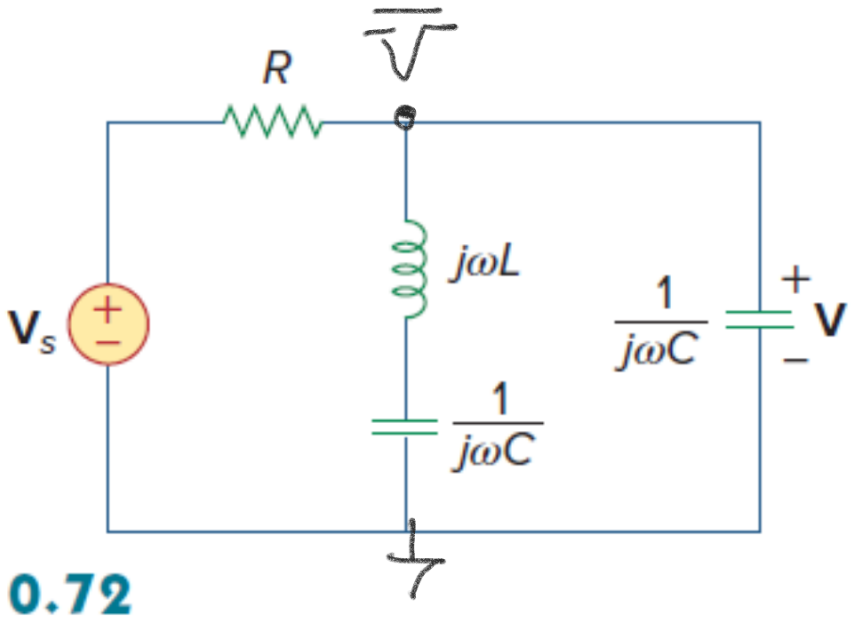

Figure 10.72
For Prob. 10.23.

$$V = \frac{V_s}{a + bj}$$

$a = ?$

$b = ?$

$$\frac{V - V_s}{R} + \frac{V}{j\omega L + \frac{1}{j\omega C}} + V j\omega C = 0$$

$$\frac{V}{R} + \frac{V}{j\omega L + \frac{1}{j\omega C}} + V j\omega C = \frac{V_s}{R}$$

$$V\left(\frac{R}{R} + \frac{R}{j\omega L + \frac{1}{j\omega C}} + j\omega C R\right) = \frac{V_s \cancel{R}}{\cancel{R}}$$

$$V\left(1 + \frac{j\omega RC}{1 - \omega^2 LC} + j\omega RC\right) = V_s$$

$$V = \frac{V_s}{1 + j\left(\frac{\omega RC}{1-\omega^2 LC} + \omega RC\right)}$$

$$a = 1 \qquad b = \frac{\omega RC}{1-\omega^2 LC} + \omega RL$$

10.25 Solve for i_o in Fig. 10.73 using mesh analysis.

G.A.Y.

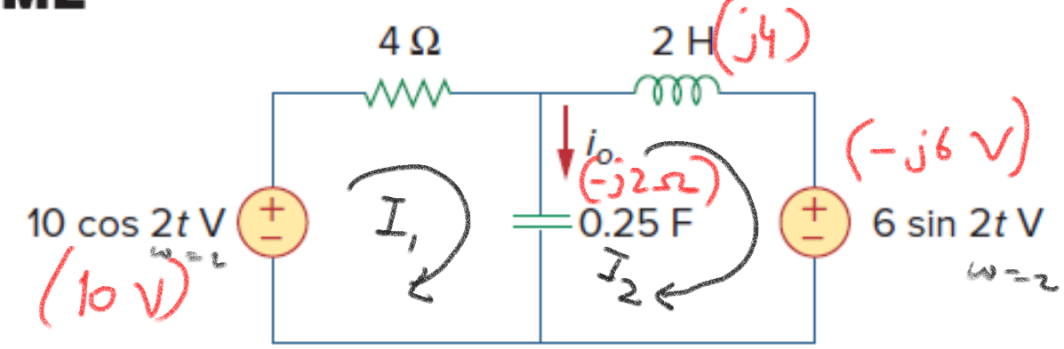

$$\frac{1}{j0.25 \times 2}$$

Figure 10.73
For Prob. 10.25.

$$I_o = I_1 - I_2$$

(1) $-10 + 4I_1 - j2(I_1 - I_2) = 0$

(2) $-j2(I_2 - I_1) + j4 I_2 - j6 = 0$

$$(4 - j2)\bar{I}_1 + j2\bar{I}_2 = 10$$

$$-\quad j2\bar{I}_1 + j2\bar{I}_2 = j6$$

$$(4 - j4)\bar{I}_1 = 10 - j6 \Rightarrow \bar{I}_1 = \frac{10 - j6}{4 - j4}$$

$$\bar{I}_2 = \frac{j6 - j2I_1}{j2} = \frac{j6 - j2\left(\frac{10 - j6}{4 - j4}\right)}{j2}$$

$$\bar{I}_2 = 3 - \frac{10 - j6}{4 - j4} = \frac{12 - j12 - 10 + j6}{4 - j4}$$

$$\bar{I}_2 = \frac{2 - j6}{4 - j4} = \frac{1 - j3}{2 - j2}$$

$$\bar{I}_o = \bar{I}_1 - \bar{I}_2 = \frac{10-j6}{4-j4} - \frac{1-j3}{2-j2} = \frac{10-j6-2+j6}{4-j4}$$

$$= \frac{8}{4-j4} = \frac{2}{1-j}$$

$$\bar{I}_o = \sqrt{2}\angle 45^\circ \text{ A}$$

$$i_o(t) = \sqrt{2}\cos(2t+45^\circ) \text{ A}$$

10.39 Find $\mathbf{I}_1$, $\mathbf{I}_2$, $\mathbf{I}_3$, and $\mathbf{I}_x$ in the circuit of Fig. 10.84.

ML

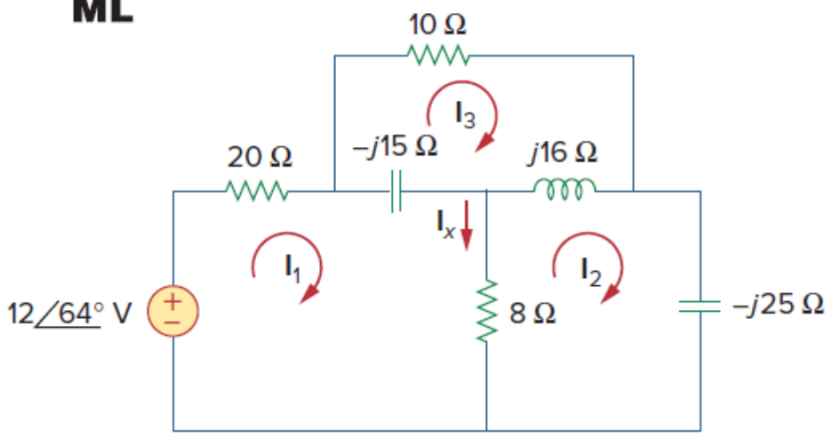

Figure 10.84
For Prob. 10.39.

(1) $-12\angle 64^\circ + 20I_1 - j15(I_1 - I_3) + 8(I_1 - I_2) = 0$

(2) $-j25\,I_2 + 8(I_2 - I_1) + j16(I_2 - I_3) = 0$

(3) $10\,I_3 + j16(I_3 - I_2) - j15(I_3 - I_1) = 0$

(1) $(28-j15)I_1 - 8I_2 + j15\,I_3 = 12\angle 64^\circ$

(2) $-8\,I_1 + (8-j9)I_2 - j16\,I_3 = 0$

(3) $j15\,I_1 - j16\,I_2 + (10+j)I_3 = 0$

$$\underbrace{\begin{bmatrix} 28-j15 & -8 & j15 \\ -8 & 8-j9 & -j16 \\ j15 & -j16 & 10+j \end{bmatrix}}_{A} \underbrace{\begin{bmatrix} I_1 \\ I_2 \\ I_3 \end{bmatrix}}_{I} = \underbrace{\begin{bmatrix} 12\angle 64^\circ \\ 0 \\ 0 \end{bmatrix}}_{b}$$

$I = \text{inv}(A) * b$ (Matlab)

$I = A \backslash b$

10.40 Find i_o in the circuit shown in Fig. 10.85 using superposition.

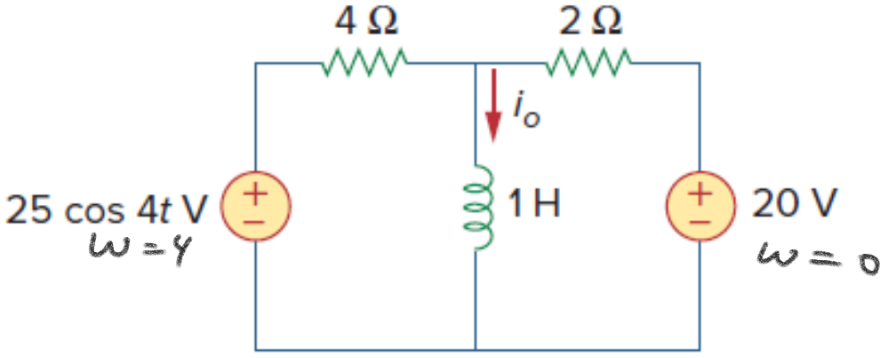

Figure 10.85
For Prob. 10.40.

i) $25\cos(4t)$ is in

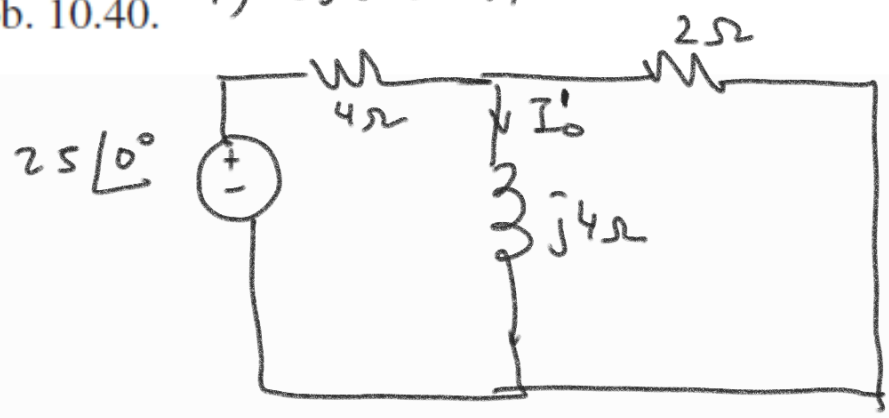

$$I_o' = 25 \times \frac{j4 \| 2}{4 + (j4 \| 2)} \times \frac{1}{j4}$$

$$= 25 \times \frac{\frac{j8}{2+j4}}{4 + \frac{j8}{2+j4}} \times \frac{1}{j4}$$

$$= 25 \times \frac{j8}{8 + j16 + j8} \times \frac{1}{j4} = \frac{50}{8 + j24}$$

$$= \frac{50}{25.3 \angle 71.6} \cong 2 \angle -71.6° \text{ A}$$

ii) 20 V DC $\quad \omega = 0$

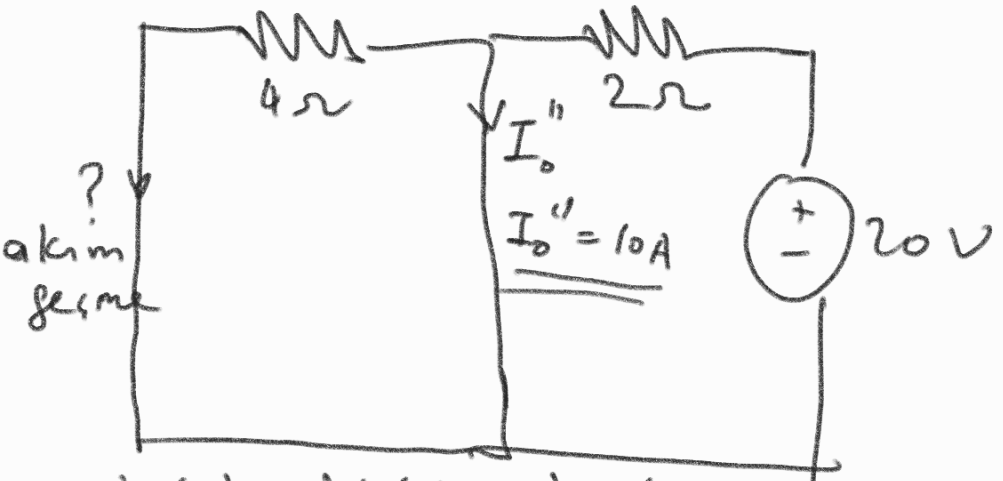

$j\omega L \to 0$

$$i_o(t) = i_o'(t) + i_o''(t)$$

$$i_o(t) = 2\cos(4t - 71.6^\circ) + 10 \text{ A}$$

10.48 Find i_o in the circuit of Fig. 10.93 using superposition.

ML

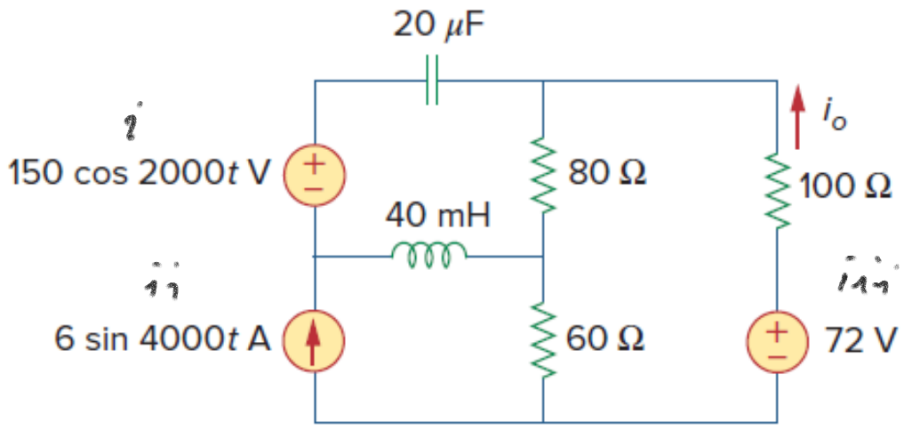

Figure 10.93
For Prob. 10.48.

i) $150\cos(2000t)$ $\quad \omega = 2000$

$$\frac{1}{j20\times10^{-6}\times2\times10^{3}}$$

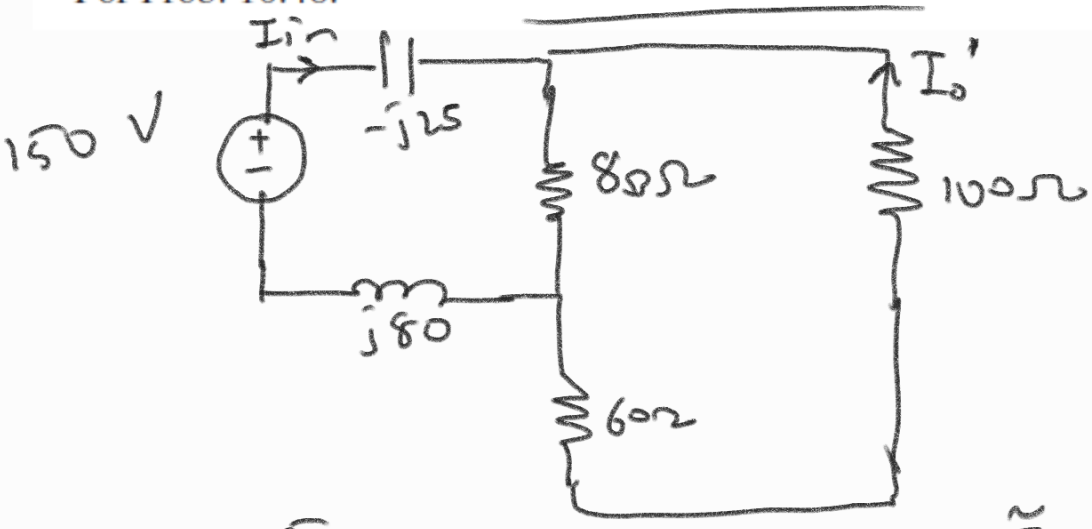

$$160 // 80 = \frac{160}{3}$$

$$I_{in} = \frac{150}{j80 - j25 + \frac{160}{3}} = \frac{150}{j55 + \frac{160}{3}} \cong \frac{150}{76.61\angle 45^\circ} \cong 2\angle -45^\circ$$

$$I_o' = -\frac{2\angle -45^\circ}{3} \qquad i_o'(t) = -\frac{2}{3}\cos(2000t - 45^\circ)$$

ii) $6\sin(4000t)$ A:

$$\frac{1}{j4\times10^{3}\times20\times10^{-6}} = \frac{1000}{80j} = -j12.5\,\Omega$$

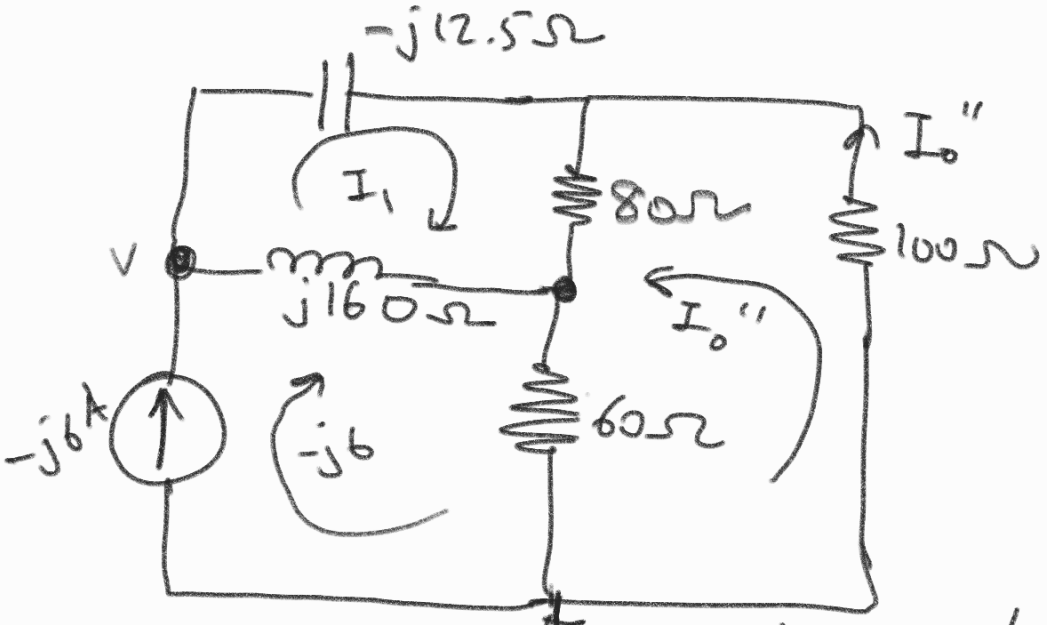

(1) $-j12.5\,I_1 + 80(I_1 + I_0'') + j160(I_1 + j6) = 0$

(2) $100 I_0'' + 80(I_1 + I_0'') + 60(I_0'' - j6) = 0$

iii) 72 V DC $\omega = 0$

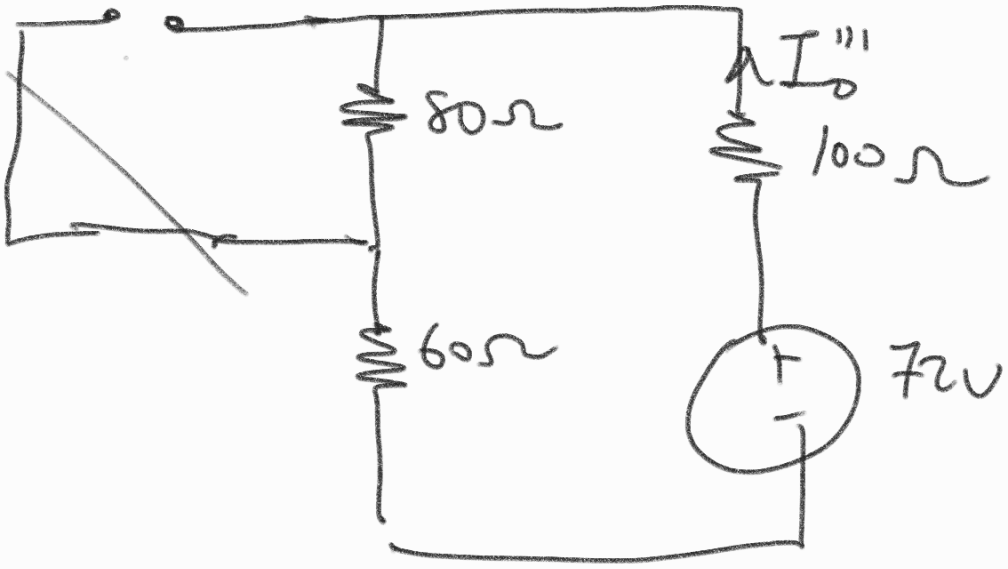

$$I_0''' = \frac{72}{240} = 0.3\text{ A DC}$$

10.49 Using source transformation, find i in the circuit of Fig. 10.94.

$\omega = 20 \frac{rad}{s}$

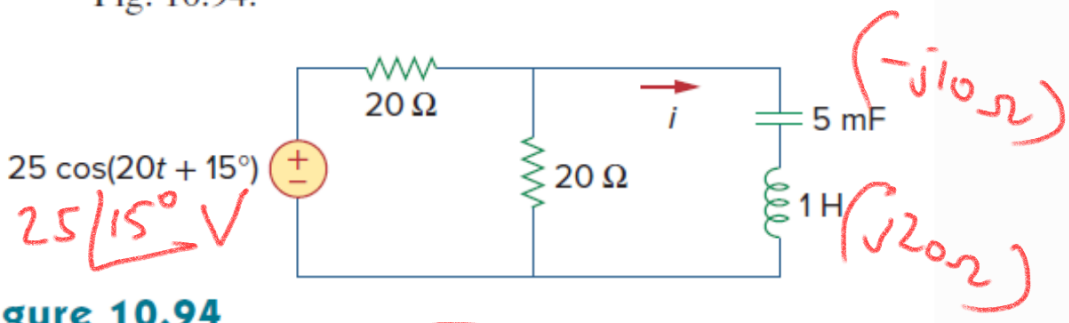

Figure 10.94
For Prob. 10.49.

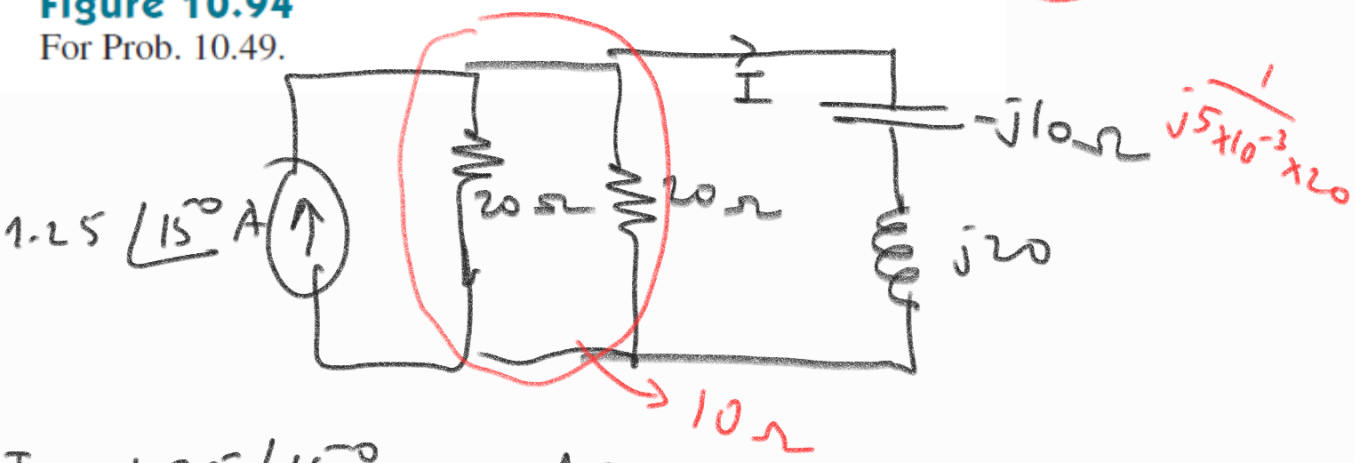

$$I = 1.25\angle 15^\circ \frac{10}{10 + j20 - j10}$$

$$= 1.25\angle 15^\circ \frac{1}{1+j} = 1.25\angle 15^\circ \frac{1}{\sqrt{2}\angle 45^\circ}$$

$$I = \frac{1.25}{\sqrt{2}}\angle -30^\circ \text{ A}$$

$$i(t) = \frac{1.25}{\sqrt{2}}\cos(20t - 30^\circ) \text{ A}$$

10.58 For the circuit depicted in Fig. 10.101, find the Thevenin equivalent circuit at terminals a-b.

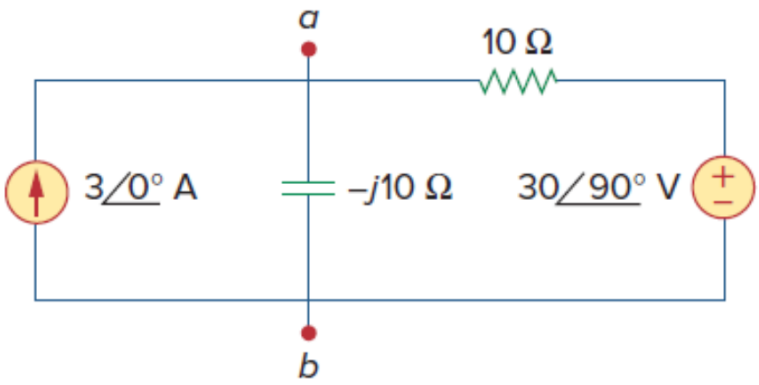

Figure 10.101
For Prob. 10.58.

$10 // -j10$

$$\frac{-j100}{10 - j10}$$

$$= \frac{-j10}{\cancel{(1-j)}\cancel{(1+j)}\,2}\,(1+j)$$

$$-j5(1+j) = 5 - 5j$$

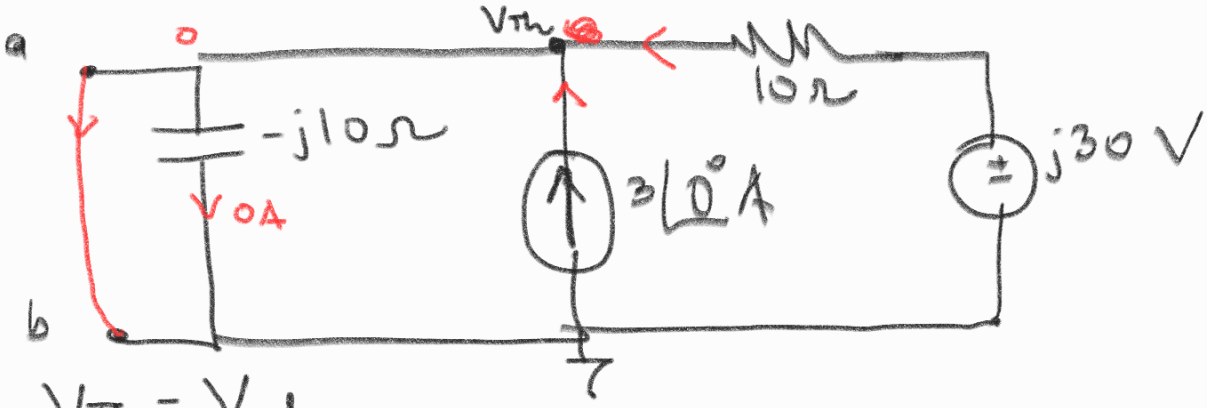

$\underline{V_{Th} = V_{ad}}$

$$3 = \frac{V_{Th}}{-j10} + \frac{V_{Th} - j30}{10}$$

$$30 = (1+j)V_{Th} - j30$$

$$V_{Th} = \frac{30 + j30}{1+j} = 30\angle 0^\circ \text{ V}$$

$\underline{I_N = I_{kd}}$: $\quad I_N = \dfrac{j30}{10} + 3 = 3 + 3j = 3\sqrt{2}\angle 45^\circ$ A

$$Z_{Th} = \frac{V_{ad}}{I_{kd}} = \frac{30\angle 0^\circ}{3\sqrt{2}\angle 45^\circ} = 5\sqrt{2}\angle -45^\circ = 5 - j5\,\Omega$$

10.61 Find the Thevenin equivalent at terminals *a-b* of the circuit in Fig. 10.104.

ML

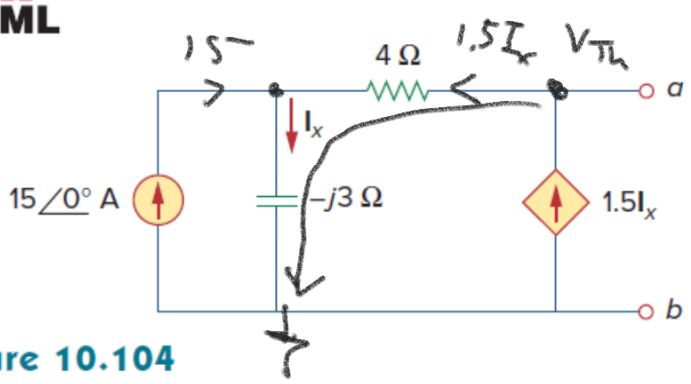

Figure 10.104
For Prob. 10.61.

Aşik devre:

$$1.5I_x + 15 = I_x$$

$$15 = -0.5I_x \Rightarrow \boxed{I_x = -30\text{ A}}$$

$$V_{ad} = V_{Th} = 4 \times 1.5I_x - j3I_x$$

$$= (6 - j3)I_x$$

$$= (6 - j3)(-30) = -180 + j90 \text{ V}$$

$V_{Th} = 90\sqrt{5} \angle 154^\circ \ V$

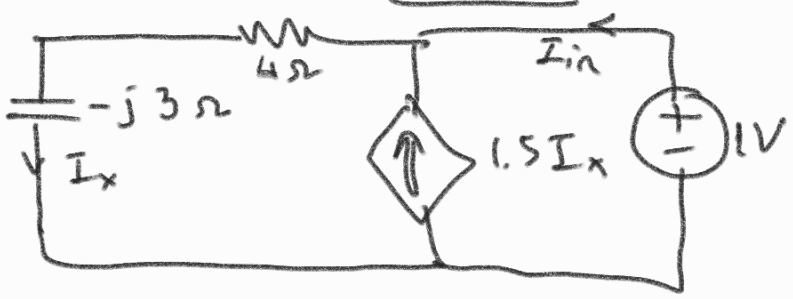

$$1 = (4-j3)I_x \longrightarrow I_x = \frac{1}{4-j3}$$

$$1.5I_x + I_{in} = I_x \Rightarrow I_{in} = -0.5\,I_x$$

$$I_{in} = \frac{-0.5}{4-j3}$$

$$Z_{Th} = \frac{1}{I_{in}} = \frac{4-j3}{-0.5} = -10\angle -37^\circ = 10\angle 143^\circ$$

$$= -8 + j6\,\Omega$$

10.72 Compute $i_o(t)$ in the op amp circuit in Fig. ~~10.115 if~~ $v_s = 4\cos(10^4 t)$ V.

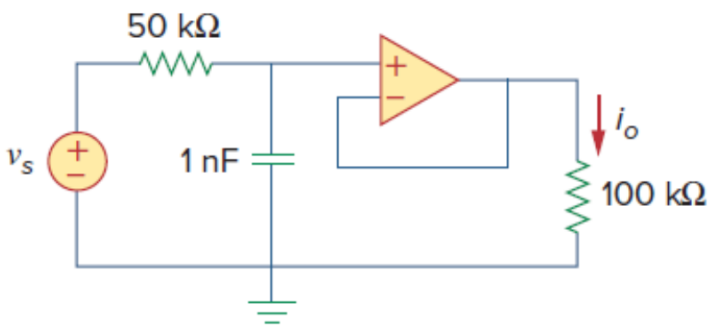

10.75 In the op amp circuit of Fig. 10.118, find the closed-loop gain and phase shift of the output voltage with respect to the input voltage if $C_1 = C_2 = 1$ nF, $R_1 = R_2 = 100$ kΩ, $R_3 = 20$ kΩ, $R_4 = 40$ kΩ, and $\omega = 2000$ rad/s.

ML

$\omega = 2000$ rad/sec

$$\frac{1}{j2000 \times 10^{-9}} = -j5\times10^5$$

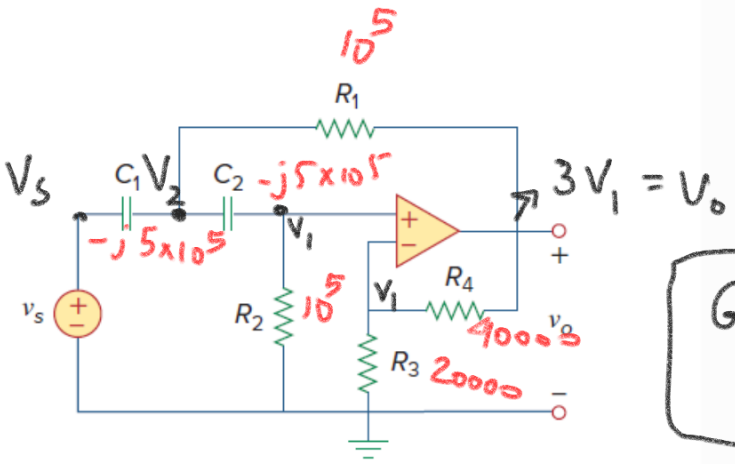

$$\text{Gain} = \frac{V_o}{V_s} \ ?$$

Figure 10.118
For Prob. 10.75.

$$\frac{V_2 - V_s}{-j500000} + \frac{V_2 - V_1}{-j500000} + \frac{V_2 - 3V_1}{100000} = 0 \qquad (1)$$

$$\frac{V_2 - V_1}{-j500000} = \frac{V_1}{100000} \qquad (2)$$

$$V_2 - V_1 = -j5V_1$$

$$\boxed{V_2 = (1 - j5)V_1} \qquad (2)$$

$$(1) \quad V_2 - V_s + V_2 - V_1 - j5V_2 + j15V_1 = 0$$

$$\boxed{(2 - j5)V_2 + (-1 + j15)V_1 = V_s}$$

$$\left[(2 - j5)(1 - j5) + (-1 + j15)\right]V_1 = V_s$$

$$\left[2 - j10 - j5 - 25 - 1 + j15\right]V_1 = V_s$$

$$-24V_1 = V_s$$

$$\text{Gain} = \frac{V_o}{V_s} = \frac{3V_1}{V_s} = \frac{3}{-24} = -\frac{1}{8}$$

Phase Shift = 180°

10.95 Figure 10.136 shows a *Hartley oscillator*. Show that the frequency of oscillation is

$$f_o = \frac{1}{2\pi\sqrt{C(L_1 + L_2)}}$$

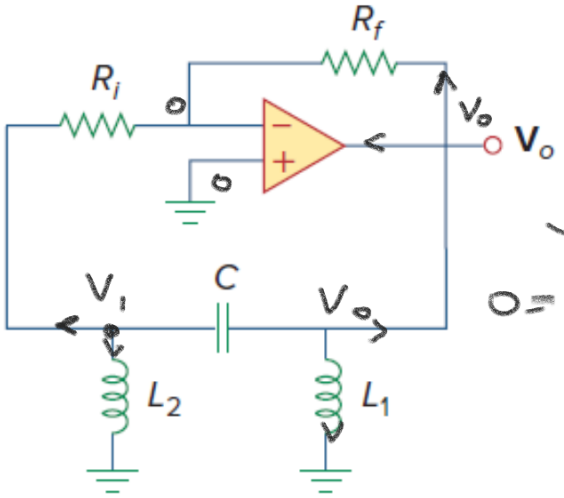

$$\cancel{0 = \frac{V_1}{R_i} + \frac{V_1}{j\omega L_2} + \frac{V_o}{j\omega L_1} + \frac{V_o}{R_f}}$$

Figure 10.136
A Hartley oscillator; for Prob. 10.95.

$$-\frac{V_1}{R_i} = \frac{V_o}{R_f} \Rightarrow \boxed{\frac{V_o}{V_1} = -\frac{R_f}{R_1}}$$

$$\frac{0 - V_1}{R_i} + \frac{V_1}{j\omega L_2} + \frac{(V_1 - V_o)j\omega C}{1} = 0 \quad (1)$$

$$(V_o - V_1)j\omega C + \frac{V_o}{j\omega L_1} + \frac{V_o}{R_f} = 0 \quad (2)$$

$$V_1\left(-\frac{1}{R_i} + \frac{1}{j\omega L_2} + j\omega C\right) = V_o \quad (1)$$

$$V_o\left(j\omega C + \frac{1}{j\omega L_1} + \frac{1}{R_f}\right) = V_1 j\omega C \quad (2)$$

$$V_1\left(\frac{-1}{R_i} + j\left(\omega C - \frac{1}{\omega L_2}\right)\right) = V_o$$

$\omega C = \frac{1}{\omega L_2}$ olursa

$\omega = \frac{1}{\sqrt{C L_2}}$ olursa

$$V_o\left(1 + \frac{1}{-\omega^2 L_1 C} + \frac{1}{j R_f \omega C}\right) = V_1$$

Chapter 11 : AC GÜÇ ANALİZİ :

$$p(t) = v(t)\, i(t)$$

$$p(t) = \underbrace{\frac{1}{2} V_m I_m \cos(\theta_v - \theta_i)}_{\text{ortalama güç}} + \frac{1}{2} V_m I_m \cos(2\omega t + \theta_v + \theta_i)$$

anlık güç

$$P = \frac{1}{2} V_m I_m \cos(\theta_v - \theta_i)$$

$$P = \frac{1}{2} \mathrm{Re}\{\bar{V}\, \bar{I}^*\} = \frac{1}{2} |\bar{I}|^2 R$$

$j\omega L \rightarrow \theta_v - \theta_i = 90^\circ \Rightarrow P = 0$

$\frac{-j}{\omega C} \rightarrow \theta_v - \theta_i = -90^\circ \Rightarrow P = 0$

ort maks güç: $\underline{Z_L = Z_{Th}^*} \Rightarrow P_{max} = \frac{|V_{Th}|^2}{8 R_{Th}}$

r.m.s. $V_{rms} = V_{eff} = \sqrt{\frac{1}{T}\int_0^T v^2(t)\, dt}$

Sinüs: $V_{rms} = \frac{V_m}{\sqrt{2}}$

$$P = Re\{\bar{V}_{rms}\ \bar{I}^*_{rms}\} = |\bar{I}_{rms}|^2 R$$

11.5 ssuming that $v_s = 8\cos(2t - 40°)$ V in the circuit of Fig. 11.37, find the average power delivered to each of the passive elements.

$\omega = 2$

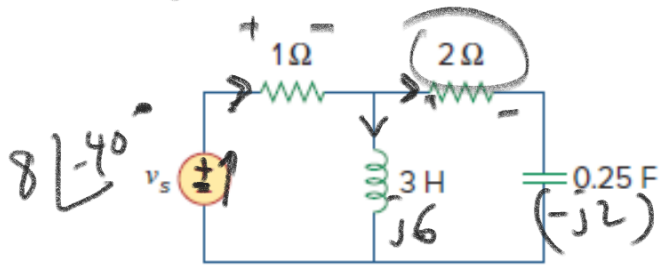

$$P = \frac{1}{2} V_m I_m \cos(\theta_v - \theta_i)$$

$$\frac{1}{j\,0.25 \times 2}$$

Figure 11.37
For Prob. 11.5.

$$I_{1\Omega} = \frac{8\angle -40°}{1 + (j6 \,//\, (2-j2))}$$

$$= \frac{8\angle -40°}{1 + \frac{j6(2-j2)}{2+j4}} = \frac{8\angle -40°\,(2+j4)}{2+j4+j12+12}$$

$$= \frac{8\angle -40°\,(2+j4)}{14+j16}$$

$$\bar{I}_{1\Omega} = \frac{8\angle -40°\,(1+j2)}{7+j8} = \frac{8\angle -40°\ \sqrt{5}\angle 63°}{\sqrt{113}\angle 48.8°} = 1.68\angle -25.8$$

I_m θ_i

$$P = \frac{1}{2} V_m I_m \cos(\theta_v - \theta_i)$$

$$= \frac{1}{2} Re\{\bar{V}_{1\Omega}\ \bar{I}^*_{1\Omega}\} = \frac{1}{2} Re\{1 \times \bar{I}_{1\Omega}\ \bar{I}^*_{1\Omega}\}$$

$$= \frac{1}{2} Re\{|I_{1\Omega}|^2\}$$

$$= \frac{1}{2} |I_{1\Omega}|^2 = \frac{1.68^2}{2}\ W$$

$$= 1.41$$

9H, 0.25F → Bunlar sıfır ortalama güç harcar.

Kaynağın ürettiği ort. güç.

$$\frac{1}{2}\,\mathrm{Re}\left\{-8\angle{-40^\circ}\,(1.68\angle{-25.8})^*\right\}$$

$$\frac{1}{2}\,\mathrm{Re}\left\{-8\angle{-40^\circ}\;1.68\angle{25.8}\right\} = \frac{1}{2}\,\mathrm{Re}\left\{-13.44\angle{-14.2^\circ}\right\}$$

$$= \frac{1}{2}(-13.44)\cos(14.2^\circ) = -6.51\ \mathrm{W}$$

ortalama güç üretir.

O zaman 2Ω dirençte $6.51 - 1.41 = 5.1\ \mathrm{W}$ ort. güç tüketilir.

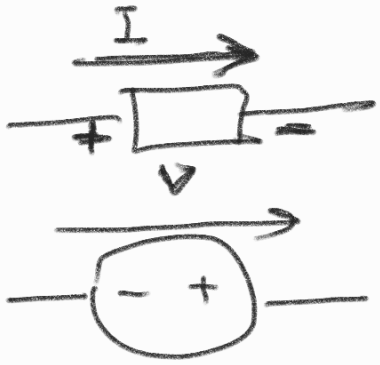

$+VI$

$-VI$ ⇒ güç kaynağı

11.7 Given the circuit of Fig. 11.39, find the average power absorbed by the 10-Ω resistor.

$\frac{20}{\sqrt{2}}\angle{45^\circ}\ V_{rms}$

$V_o\left(\frac{10-j5}{10}\right)$

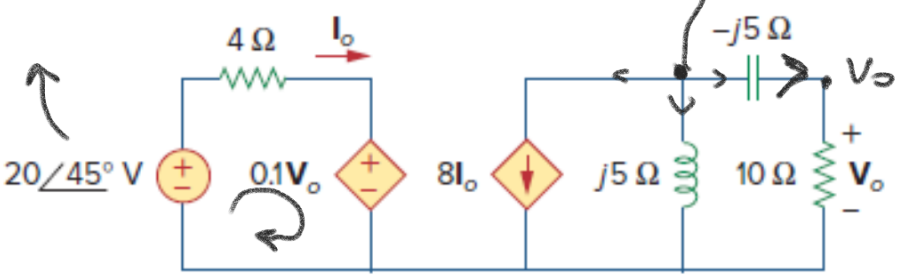

Figure 11.39
For Prob. 11.7.

$$-20\angle{45^\circ} + 4I_o + 0.1V_o = 0 \qquad (1)$$

$$8I_o + \frac{V_o(10-j5)}{10\times j5} + \frac{V_o}{10} = 0 \qquad (2)$$

(2) $\frac{80 I_o}{10} + \frac{V_o(-j2-1)}{10} + \frac{V_o}{10} = 0$

$80 I_o + V_o(-j2 \cancel{-1+1}) = 0$

$80 I_o = j2 V_o \Rightarrow \boxed{-j40 I_o = V_o}$

(1) $20\angle 45^\circ = 4 I_o + 0.1 \times (-j40) I_o$

$20\angle 45^\circ = (4 - j4) I_o$

$20\angle 45^\circ = 4\sqrt{2}\angle -45^\circ I_o$

$\frac{5}{\sqrt{2}}\angle 90^\circ = I_o \Rightarrow V_o = 40\angle -90^\circ I_o = 40\angle -90^\circ \frac{5}{\sqrt{2}}\angle 90^\circ$

$\boxed{V_o = 100\sqrt{2}}$

$I_{10\Omega} = 10\sqrt{2}\,A$

$P_{10\Omega} = \frac{1}{2} Re\{\bar{V}_{10\Omega} \bar{I}^*_{10\Omega}\}$

$= \frac{1}{2} Re\{|I_{10\Omega}|^2 10\}$

$= \frac{2000}{2} = 1000\,W$ ort güç harcar.

11.17 Calculate the value of $\mathbf{Z}_L$ in the circuit of Fig. 11.48 in order for $\mathbf{Z}_L$ to receive maximum average power. What is the maximum average power received by $\mathbf{Z}_L$?

$Z_L = Z_{Th}^*$ olmalı

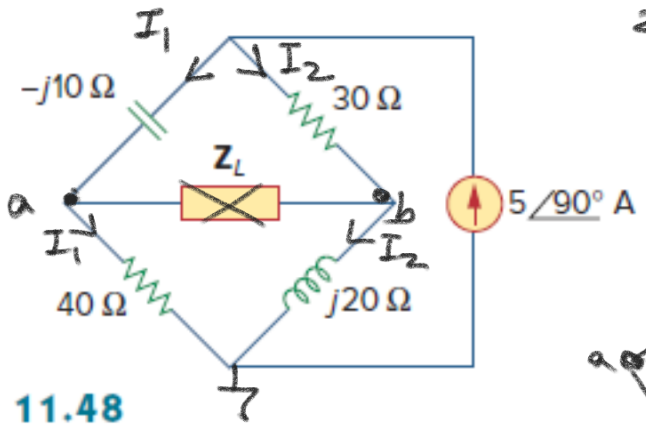

Figure 11.48
For Prob. 11.17.

Z_{Th}

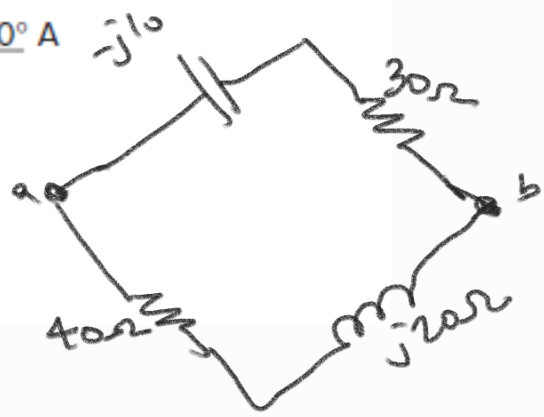

$V_a = 40 I_1$, $V_b = j20 I_2$

$$(30-j10) \,//\, (40+j20) = Z_{Th}$$

$$= \frac{(30-j10)(40+j20)}{70+j10} = \frac{(3-j)(40+j20)}{7+j}$$

$$= \frac{\sqrt{10}\,\angle -18.43 \;\; 20\sqrt{5}\,\angle 26^\circ}{5\sqrt{2}\,\angle 8.13^\circ}$$

$$= 20\,\angle -0.56^\circ \simeq 20 = Z_{Th}$$

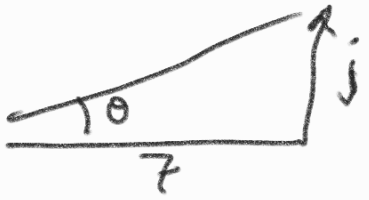

$$\boxed{Z_L = 20\,\Omega \text{ Imale}}$$

$$P_{max} = \frac{|V_{Th}|^2}{8R_{Th}} = \frac{|V_{Th}|^2}{8\times 20}$$

$$V_{Th} = ? = V_{ad}$$

$$I_1 = \frac{j5(3+j4)}{7+j4} \qquad I_2 = \frac{j5(4-j4)}{7+j4}$$

$$V_{ab} = V_{ad} = 40\,I_1 - j20\,I_2 = V_a - V_b$$

$$= \frac{j200(3+j2)}{7+j} + \frac{100(4-j)}{7+j}$$

$$V_{ad} = \frac{j600 - \cancel{400} + 400 - j100}{7+j} = \frac{j500}{7+j} = \frac{500\,\angle 90^\circ}{\sqrt{50}\,\angle 8.13}$$

$$= 70.7\,\angle 71.87^\circ$$

$$V_{Th} = 70.7\,\angle 71.87^\circ \;\; V$$

$$P_{max} = \frac{|V_{Th}|^2}{8R_{Th}} = \frac{70.7^2}{8\times 20} = 31.24 \text{ Watt}$$

11.20 The load resistance R_L in Fig. 11.51 is adjusted until it absorbs the maximum average power. Calculate the value of R_L and the maximum average power.

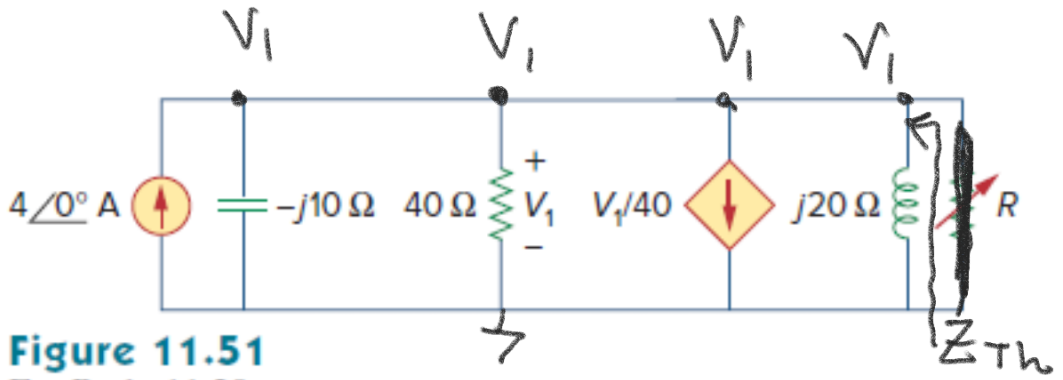

Figure 11.51
For Prob. 11.20.

Normalde P^{max} için $Z_L = Z_{Th}^*$ olmalı

Eğer Z_L sadece resistif (R) olacaksa o zaman $R_L = |Z_{Th}|$ olmalı.

$$Z_{Th} = \frac{V_{ad}}{I_{kd}}$$

V_{ad}: $V_1 = V_{Th}$

$$4 = \frac{V_1}{-j10} + \frac{V_1}{40} + \frac{V_1}{40} + \frac{V_1}{j20}$$

$(j4)$ $(-j2)$

$$160 = V_1[j4 + 1 + 1 - j2] = V_1(2+j2)$$

$$V_1 = V_{Th} = \frac{160}{2+j2} = \frac{80}{1+j} = \frac{80}{\sqrt{2}\angle 45^\circ} \text{ V}$$

I_{kd}: $V_1 = 0$

$-j10\Omega$, ve 40Ω'dan akım geçmez

$V_1/40$ da sıfırdır. O zaman $I_{kd} = 4\angle 0^\circ$ A olur

$$Z_{Th} = \frac{V_{Th}}{I_{kd}} = \frac{80}{\sqrt{2}\angle 45^\circ}\,\frac{1}{4} = \underline{10\sqrt{2}\angle -45^\circ}$$

$R_L = |Z_{Th}| = 10\sqrt{2}\ \Omega$ olmalı.

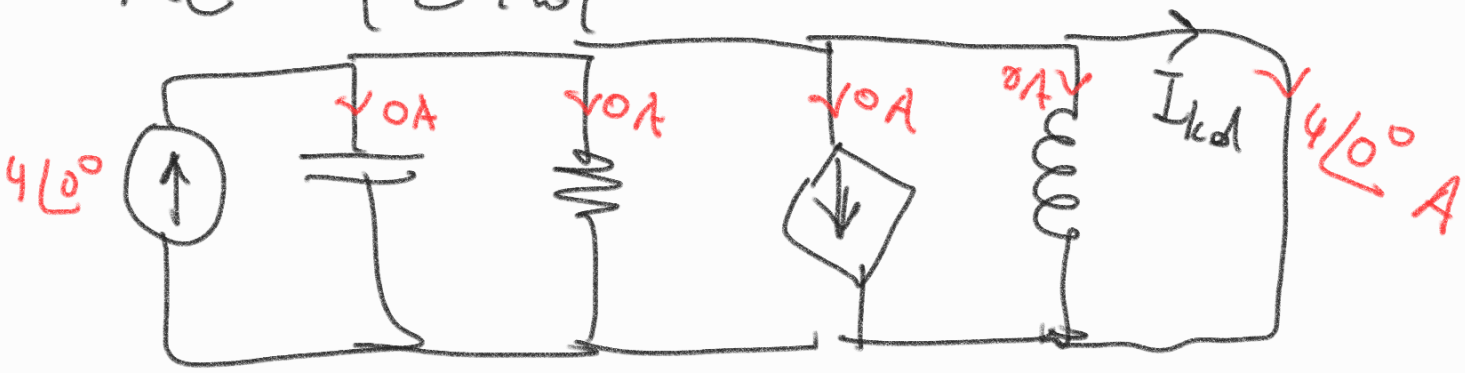

$$P^{max} = \frac{|V_{Th}|^2}{8R_{Th}} = \frac{3200}{8\times 10} = 40\ W$$

$$R_{Th} = Re\{Z_{Th}\} = 10\sqrt{2}\cos(-45^\circ) = 10\ \Omega$$

11.30 Compute the rms value of the waveform depicted in Fig. 11.61.

r.m.s. root mean square

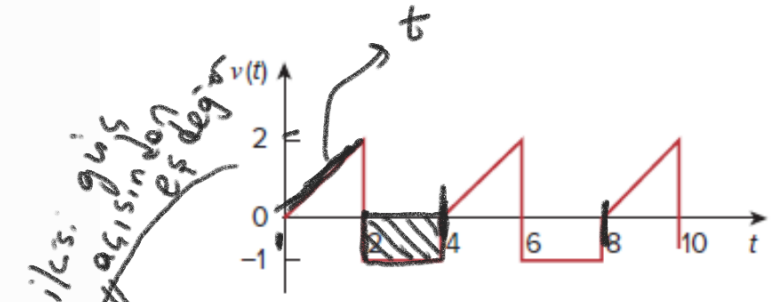

Bu ilcs. grafiğ aşağıdan ek değ.

Figure 11.61
For Prob. 11.30.

$$V_{rms} = \sqrt{\frac{1}{4}\int_0^4 v^2(t)\,dt}$$

$$= \sqrt{\frac{1}{4}\int_0^2 v^2(t)\,dt + \frac{1}{4}\int_2^4 \underbrace{v^2(t)}_{1}\,dt}$$

$$= \sqrt{\frac{1}{4}\int_0^2 t^2\,dt + \frac{1}{4}\times 2}$$

$$V_{rms} = \sqrt{\frac{1}{4}\cdot\frac{t^3}{3}\Big|_0^2 + \frac{1}{2}} = \sqrt{\frac{2}{3}+\frac{1}{2}} = \sqrt{\frac{7}{6}}$$

11.39 An ac motor with impedance $\mathbf{Z}_L = 2 + j1.2\,\Omega$ is supplied by a 220-V, 60-Hz source. (a) Find pf, P, and Q. (b) Determine the capacitor required to be connected in parallel with the motor so that the power factor is corrected to unity.

kompanzasyon güç faktörü düzeltme

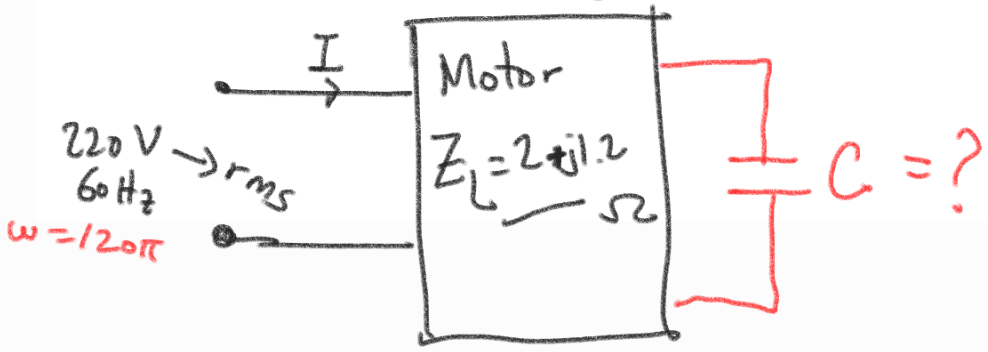

$$\bar{S} = \frac{1}{2}\bar{V}\bar{I}^*$$

kompleks güç.

eğer r.m.s ise $\bar{S} = \bar{V}_{rms}\bar{I}^*_{rms}$

$$= \underbrace{Re\{\bar{V}_{rms}\bar{I}^*_{rms}\}}_{P} + j\underbrace{Im\{\bar{V}_{rms}\bar{I}^*_{rms}\}}_{Q}$$

ortalama güç. reaktif güç.

$$P = Re\{\bar{V}_{rms}\bar{I}^*_{rms}\}$$

$$= Re\{\bar{I}_{rms} Z \bar{I}^*_{rms}\} = Re\{|\bar{I}_{rms}|^2 Z\} \circledast$$

$= |\bar{I}_{rms}|^2 Re\{Z\}$

$$= Re\left\{\frac{\bar{V}_{rms}\bar{V}^*_{rms}}{Z^*}\right\} = Re\left\{\frac{|V_{rms}|^2}{Z^*}\right\}$$

$$Q = Im\{|\bar{I}_{rms}|^2 Z\} \circledast$$

$$= Im\left\{\frac{|V_{rms}|^2}{Z^*}\right\}$$

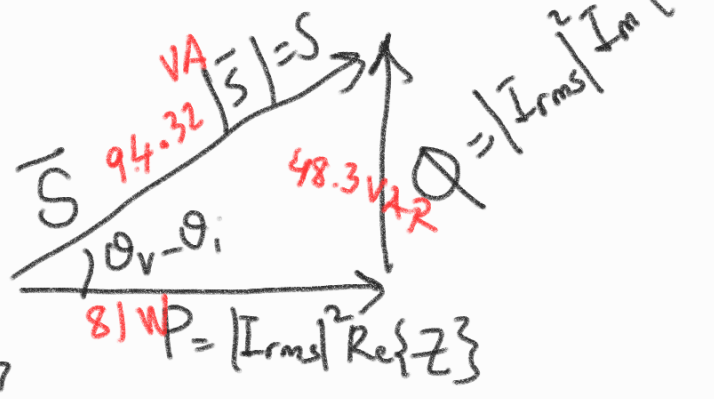

g.f. $\frac{P}{S} = \frac{Re\{Z\}}{|Z|} = \frac{2}{\sqrt{2^2 + 1.2^2}}$

$= 0.86 \longrightarrow$ lagging

0.86 (lagging) endüktif yük.

$$\bar{S} = \bar{V}\,\bar{I}^* = \bar{V}\,\frac{\bar{V}^*}{Z^*} = \frac{220 \times 220}{2 - j1.2}$$

kompleks.

$$S = |\bar{S}| \text{ apparent power (görünen güç)} = \frac{220^2}{\sqrt{5.44}} = 94.32 \text{ VA}$$

$$P = S \times 0.86 \cong 81 \text{ Watt}$$

$$Q = \sqrt{94.32^2 - 81^2} \cong 48.3 \text{ VAR}$$ reaktif güç.

$$\bar{S} = 81 + j48.3 \text{ VA}$$ kompleks güç.

L: $j\omega L$: $V = I\,j\omega L$

$V = I\,\omega L \angle 90^\circ$ (lagging) akım geride

C: $\frac{1}{j\omega C} = V = \frac{I}{j\omega C} = V\omega C \angle 90^\circ = I$ akım ileride (leading)

$= \frac{-j}{\omega C}$

g.f = 1 ⇒ reaktif gücün sıfırlanması

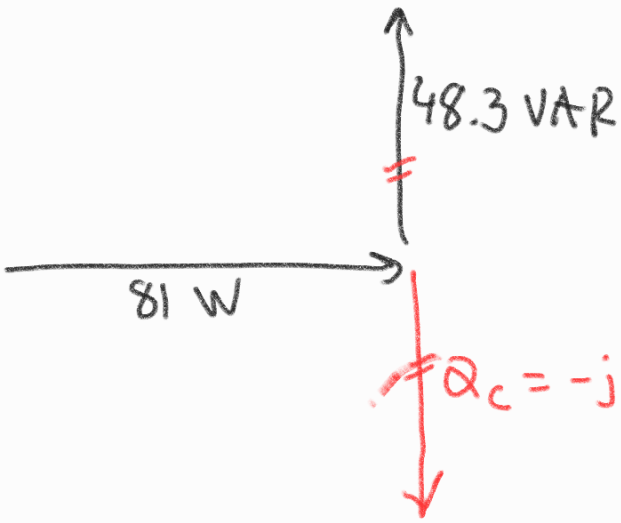

$Q_c = -j48.32$ olmalı

$$\frac{|220|^2}{Z_c^*} = -j48.3$$

$$\frac{220^2}{\left(\frac{1}{j\omega C}\right)^*} = -j48.3$$

$$220^2 \times \omega C(-j) = -j48.3$$

$$220^2 \times 120\pi \times C = 48.3$$

$$C = \frac{48.3}{220^2 \times 120\pi} = 2.65\,\mu F$$

Kapasitör eklenmeden, akım:

$$\bar{S} = (81 + j48.3) = 220\,I^*$$

$$\rightarrow I = \frac{81 - j48.3}{220} \qquad \boxed{|I| = \frac{94.3}{220}}$$

Kapasitör eklendikten sonra akım:

$\bar{S} = 81 = 220\, I^* \Rightarrow I = \frac{81}{220}$ giriş akımı (hat akımı) azalmış oldu.

hattaki kayıp azaldı

11.45 The voltage across a load and the current through it are given by

$$v(t) = 20 + 60 \cos 100t \text{ V}$$
$$i(t) = 1 - 0.5 \sin 100t \text{ A}$$

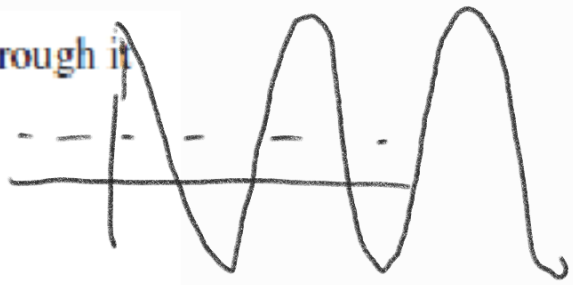

Find:

(a) the rms values of the voltage and of the current
(b) the average power dissipated in the load

a) $V_{rms} = 20 + \frac{60}{\sqrt{2}}$

$I_{rms} = 1 + \frac{0.5}{\sqrt{2}}$

b) $p = v(t)i(t) = 20 - 10\sin(100t) + 60\cos 100t$

$- 30\cos(100t)\cancel{\sin(100t)}$ $\cos(100t - 90^\circ)$

$= 20 - 10\sin(100t) + 60\cos(100t)$

$-15\cos(200t - 90^\circ) - 15\cos(90^\circ)$

$P = 20 - \cancel{15\cos(90^\circ)} = 20$ Watt $\rightarrow 0$

$v(t) = 20 + 60\cos(100t)$

$i(t) = 1 - 0.5\cos(100t - 90^\circ) = 1 + 0.5\cos(100t + 90^\circ)$

2. yöntem

DC kısım için $P = 20$ W

AC kısım için $P = \frac{60 \times 0.5}{2} \cos(-90^\circ) = \emptyset$ W

$Q = \frac{60 \times 0.5}{2} \sin(-90^\circ) = -15$ VAR

11.52 In the circuit of Fig. 11.71, device A receives 2 kW at 0.8 pf lagging, device B receives 3 kVA at 0.4 pf leading, while device C is inductive and consumes 1 kW and receives 500 VAR.

(a) Determine the power factor of the entire system.

(b) Find $\mathbf{I}$ given that $\mathbf{V}_s = 120\angle 45°$ V rms.

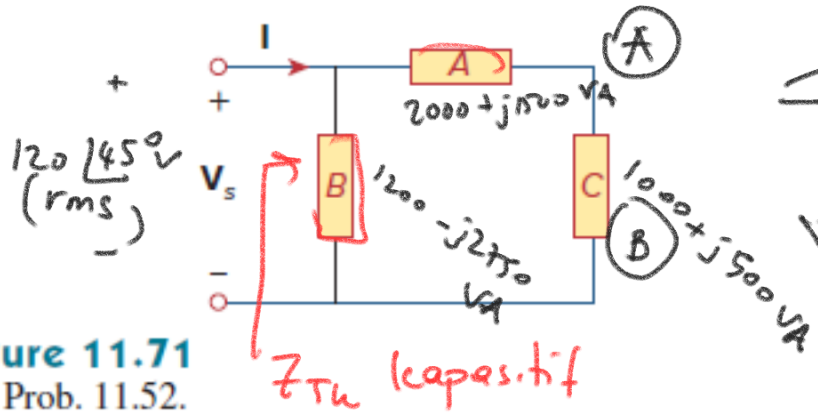

Figure 11.71
For Prob. 11.52.

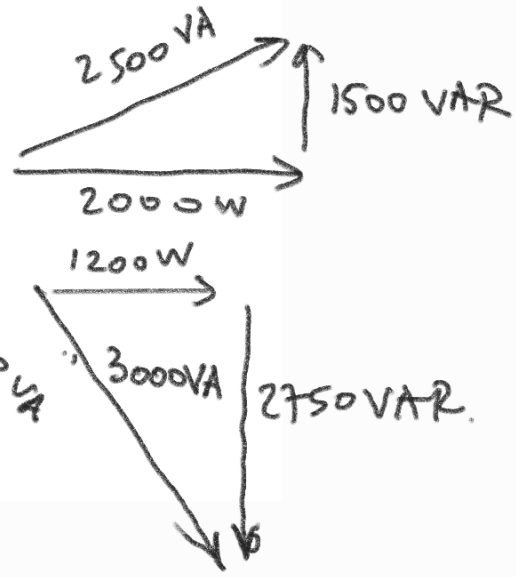

Entire System

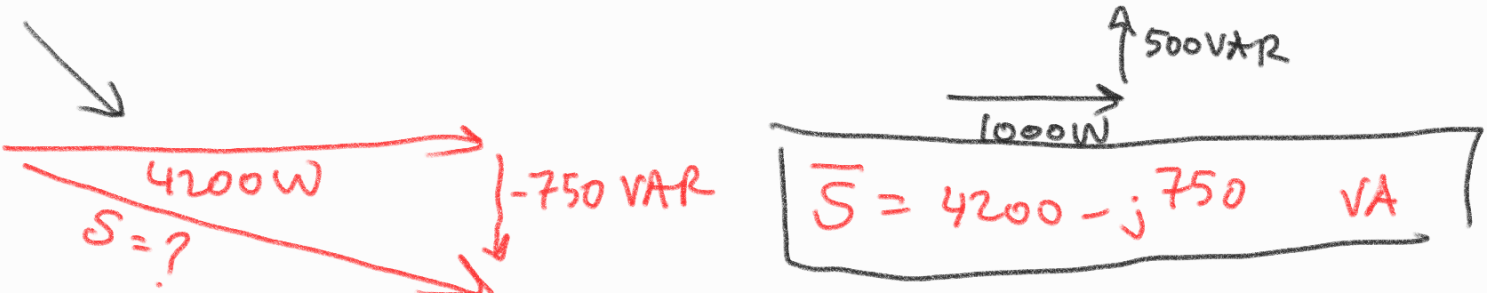

$$\boxed{\bar{S} = 4200 - j750 \quad VA}$$

S = 4266 VA görünen güç

p.f. $\frac{4200}{4266} = 0.985$ (leading) kapasitif

Z_{Th} kapasitif.

b) $\bar{S} = \bar{V}_s \bar{I}^*$

$4200 - j750 = 120\angle 45° \; \bar{I}^*$

$$I = \frac{4200 + j750}{120\angle -45°} = \frac{4266\angle 9.9°}{120\angle -45°} = 35.55\angle 54.9° \text{ A}$$

11.59 Calculate the reactive power in the inductor and capacitor in the circuit of Fig. 11.78.

ML

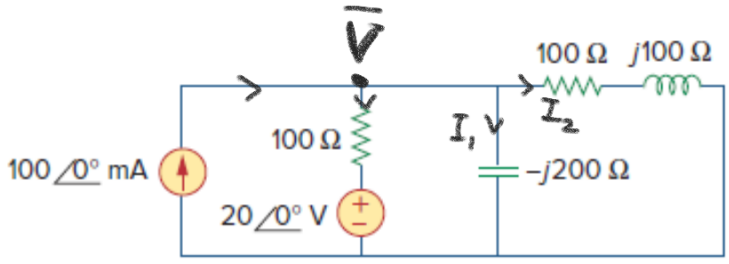

Figure 11.78
For Prob. 11.59.

$$0.1 = \frac{V-20}{100} + \frac{V}{-j200} + \frac{V}{100+j100}$$

$$10 = V - 20 + \frac{V}{-j2} + \frac{V}{1+j}$$

$$30 = V\left(1 + \frac{1}{-j2} + \frac{1}{1+j}\right)$$

$$= V\left(1 + \frac{j}{2} + \frac{1-j}{2}\right)$$

$$30 = V\left(\frac{2 + \cancel{j} + 1 - \cancel{j}}{2}\right)$$

$$\boxed{V = 20 \text{ Volt}} \quad 20\angle 0^\circ \text{ V}$$

$$\bar{I}_1 = \frac{20}{-j200} = 0.1\angle 90^\circ \text{ A}$$

$$\bar{I}_2 = \frac{20}{100+j100} = \frac{20}{100\sqrt{2}\angle 45^\circ}$$

$$= \frac{1}{5\sqrt{2}}\angle -45^\circ$$

$$\bar{S} = \frac{1}{2}\bar{V}\bar{I}^* = \frac{1}{2}\bar{I}\bar{Z}\bar{I}^* = \frac{1}{2}|\bar{I}|^2\bar{Z}$$

Inductor (j100) : $\bar{S}_{j100\Omega} = \frac{1}{2}|\bar{I}_2|^2 (j100)$

$$= \frac{1}{2}\,\frac{1}{50}\,j100 = j \text{ VA} \rightarrow \boxed{\text{Reaktif güç } 1 \text{ VAR}}$$

$$0 + 1j$$

Kapasitor (−j200Ω) : $\bar{S}_{-j200\Omega} = \frac{1}{2}|\bar{I}_1|^2(-j200)$

$$= \frac{1}{2}\,\frac{1}{100}\,-j200 = -j \text{ VA}$$

$$\boxed{\text{Reaktif güç } -1 \text{ VAR}}$$

11.61 Given the circuit in Fig. 11.80, find I_o and the overall complex power supplied.

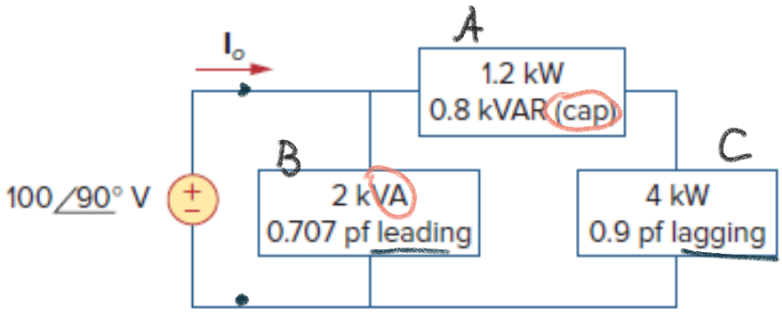

Figure 11.80
For Prob. 11.61.

leading ⇒ kapasitif

$$\bar{S}_{eq} = \frac{1}{2}\bar{V}_{in}\bar{I}_o^*$$

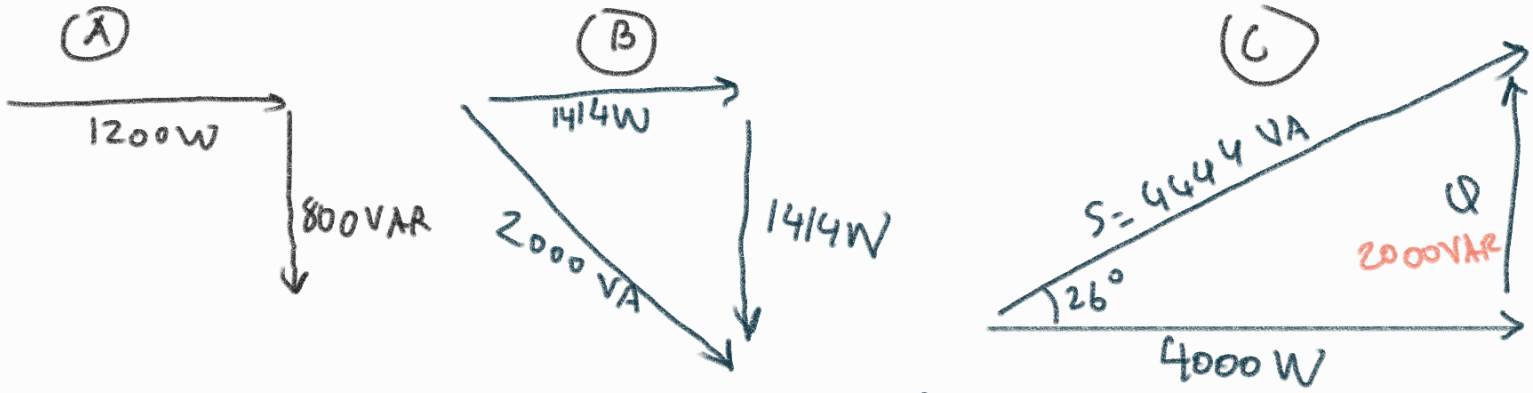

$\frac{4000}{S} = 0.9 \qquad Q = 2000$

$$\bar{S}_A + \bar{S}_B + \bar{S}_C = \bar{S}_{eq} = 6614 - j214 \text{ VA}$$

$$6614 - j214 = \frac{1}{2}\cdot(100j)\cdot \bar{I}_o^*$$

$$\bar{I}_o = \left(\frac{6614 - j214}{50j}\right)^* = \frac{6614 + j214}{-50j}\,\frac{(-j)}{(-j)}$$

$$\boxed{\bar{I}_o = \frac{214 - j6614}{-50} \text{ A}}$$

11.67 For the op amp circuit in Fig. 11.86, calculate:

(a) the complex power delivered by the voltage source

(b) the average power dissipated in the 10-Ω resistor

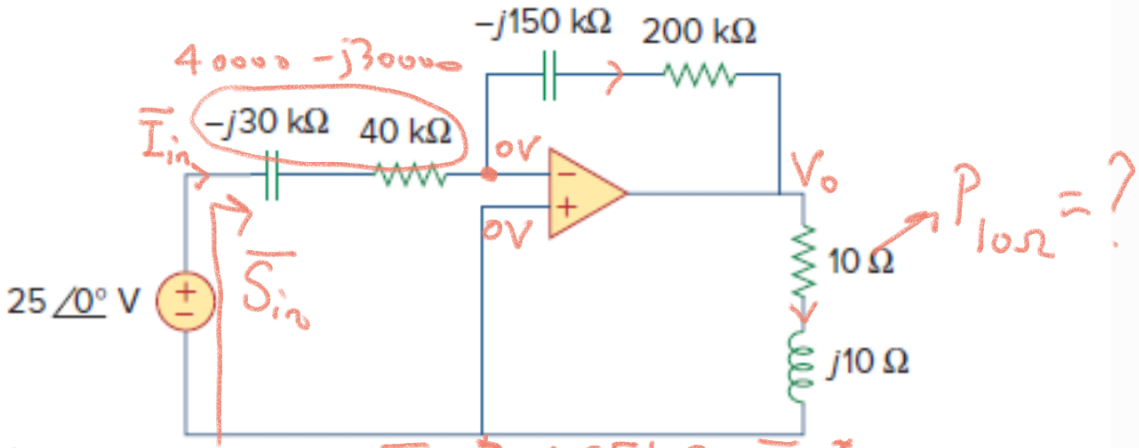

Figure 11.86
For Prob. 11.67.

$$\bar{S}_{in} = \frac{1}{2}\, 25\angle 0^\circ \; \bar{I}_{in}^*$$

$$\bar{I}_{in} = \frac{25\angle 0^\circ}{40000 - j30000} = \frac{\cancel{25}\angle 0^\circ}{\cancel{50000}\,2000\angle -37^\circ} = 0.5\angle +37^\circ \text{ mA}$$

$$\bar{S}_{in} = \frac{1}{2}\, 25\angle 0^\circ \; 0.5\angle -37^\circ \times 10^{-3} =$$

$$= 6.25\angle -37^\circ \times 10^{-3} \text{ VA}$$

$$\bar{S}_{in} = \underbrace{6.25\cos(-37^\circ)\times 10^{-3}}_{P_{in}} + j\,\underbrace{6.25\sin(-37^\circ)10^{-3}}_{Q_{in}} \text{ VA}$$

$$\bar{S} = \frac{1}{2}\bar{V}\bar{I}^* = \frac{1}{2}\bar{I}\bar{Z}\bar{I}^* = \frac{1}{2}|\bar{I}|^2 Z$$

$$\bar{P}_{10\Omega} = \bar{S}_{10\Omega} = \frac{1}{2}|I_{in}|^2 \times 10 = \frac{1}{2}(6.25)^2 10^{-6} \times 10$$

11.73 A 240-V rms 60-Hz supply serves a load that is 10 kW (resistive), 15 kVAR (capacitive), and 22 kVAR (inductive). Find:

12210 VA ← (a) the apparent power → $|10000 - j15000 + j22000| = |10000 + j7000|$

$\frac{1000 - j700}{24}$ ← (b) the current drawn from the supply

0.185 mF (c) the kVAR rating and capacitance required to improve the power factor to 0.96 lagging

$\frac{10000 - j2917}{240}$ (d) the current drawn from the supply under the new power-factor conditions

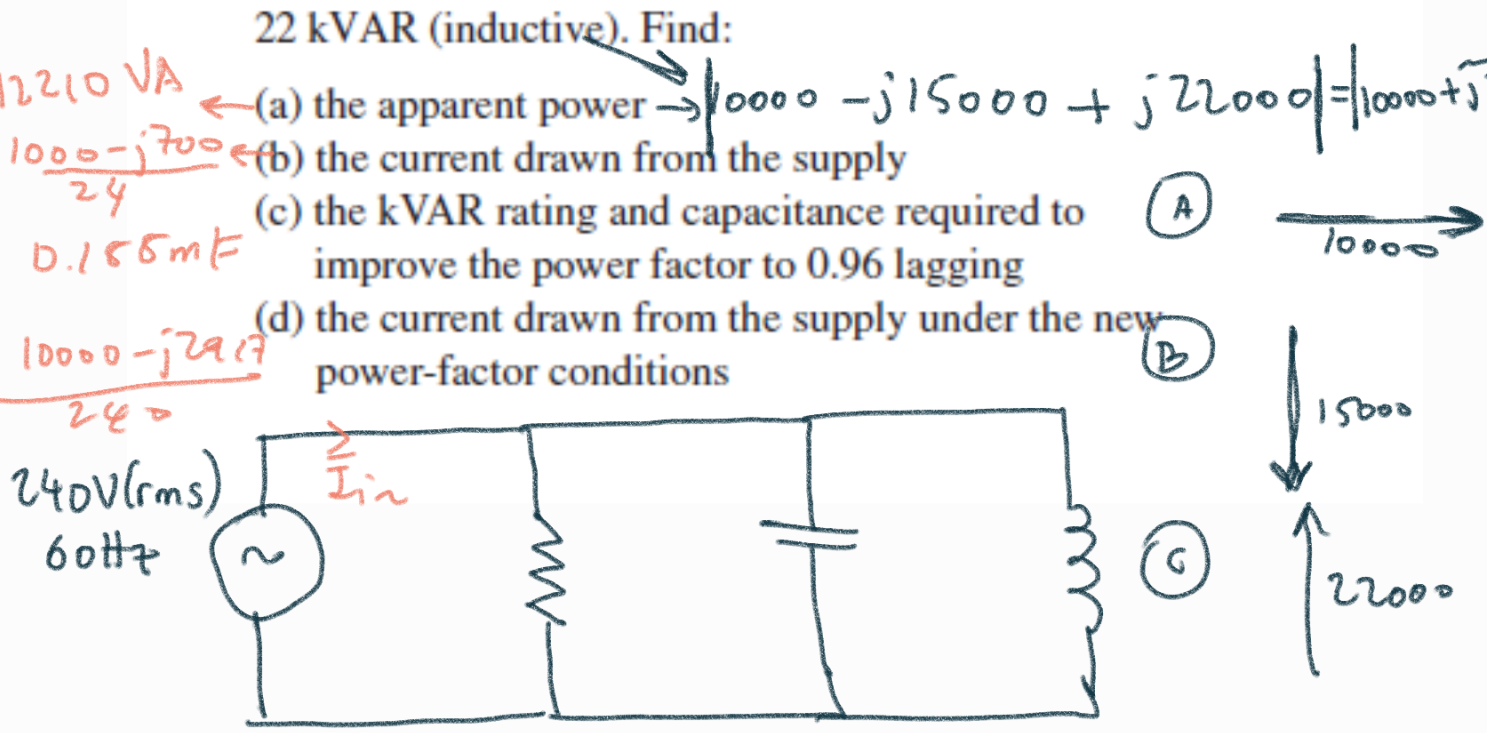

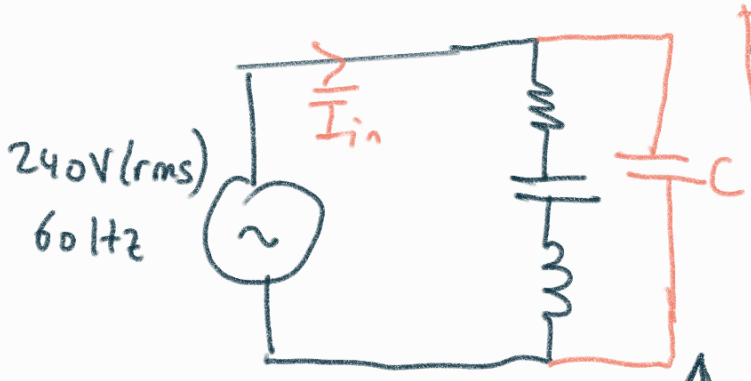

$$\boxed{\bar{S}_{eq} = 10000 + j7000}$$

$$= 240 \times \bar{I}_{in}^*$$

$$\bar{I}_{in} = \frac{10000 - j7000}{240}$$

c)

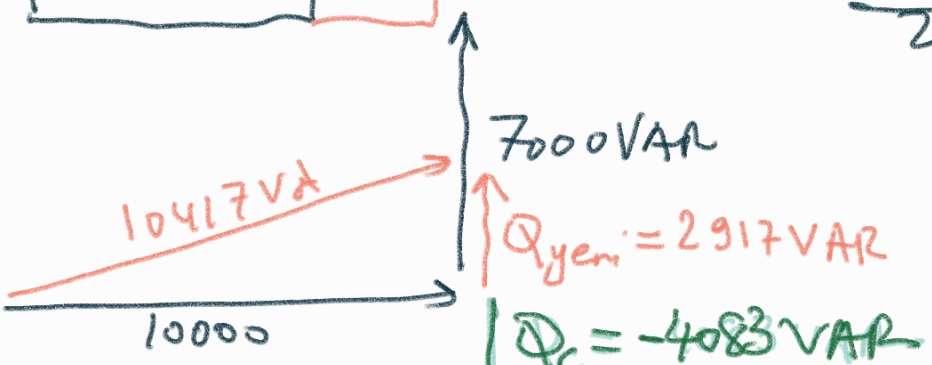

$$\frac{10000}{S_{yeni}} = 0.96 \rightarrow S_{yeni} = 10417$$

$$\frac{240^2}{Z_c^*} = \frac{240^2}{j/\omega C} = \frac{240^2 \omega C}{j} = -j240^2\omega C = -j4083$$

$$= 240^2 \times 120\pi C = 4083$$

$$C = 0.188\ mF$$

d) Yeni durumda kaynaktan çekilen akım?

$$S_{yeni} = 10000 + j2917\ VA = 240 \times \bar{I}^*_{yeni}$$

$$\bar{I}_{yeni} = \frac{10000 - j2917}{240}\ A$$

11.91 The nameplate of an electric motor has the following information:

Line voltage: 220 V rms
Line current: 15 A rms
Line frequency: 60 Hz
Power: 2700 W

Determine the power factor (lagging) of the motor. Find the value of the capacitance C that must be connected across the motor to raise the pf to unity.

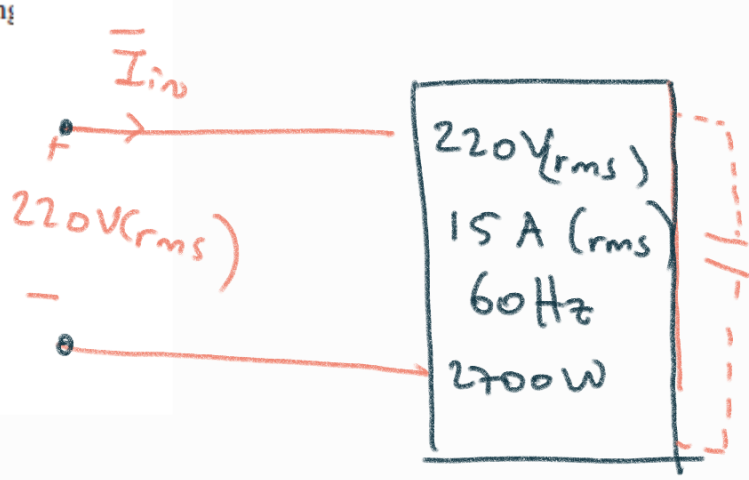

$$|\bar{I}_{in}| = 15A$$

$$\bar{S} = 220\angle 0^\circ \bar{I}_{in}^*$$

$$S = 220 \times \underbrace{|I_{in}|}_{15A} = 3300\ VA \quad \text{görünen güç}$$

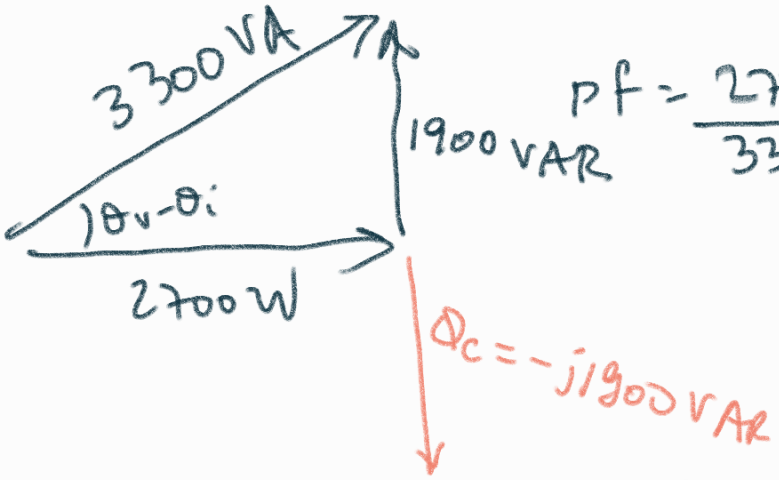

$$pf = \frac{2700}{3300} = \frac{9}{11} \simeq 0.82 \quad \text{(takip eden)}$$

$$\frac{220^2}{Z_c^*} = -j1900 = \cancel{-j}220^2 \omega C = \cancel{-j}1900$$

$$C = \frac{1900}{220^2 \times 120\pi} = 0.1\ mF$$

$I_{yeni} = \frac{2700}{220} \cong 12.3\ A$

11.85 A regular household system of a single-phase three-wire circuit allows the operation of both 120-V and 240-V, 60-Hz appliances. The household circuit is modeled as shown in Fig. 11.96. Calculate:

(a) the currents $\mathbf{I}_1$, $\mathbf{I}_2$, and $\mathbf{I}_n$

(b) the total complex power supplied

(c) the overall power factor of the circuit

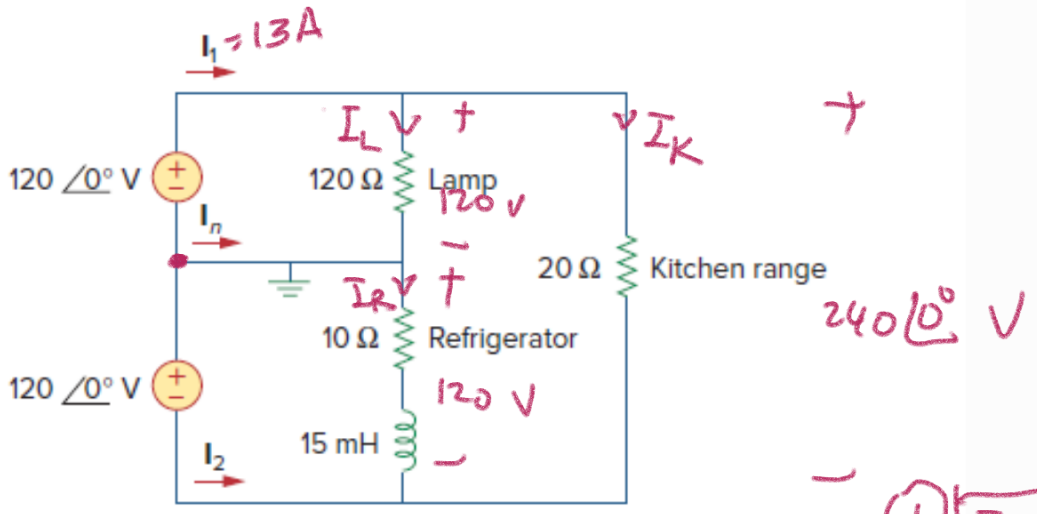

Figure 11.96
For Prob. 11.85.

$I_n + I_1 + I_2 = 0$

① $\boxed{I_n + I_L = I_R}$

② $\boxed{\bar{I}_1 = \bar{I}_L + \bar{I}_k}$

③ $\boxed{\bar{I}_2 + \bar{I}_R + \bar{I}_k = 0}$

$I_L = \frac{120}{120} = 1\angle 0^\circ\ A$

$15mH \rightarrow j120\pi \times 0.015 = j5.65\Omega$

$\bar{I}_R = \frac{120\angle 0^\circ}{10 + j5.65} = \frac{120(10 - j5.65)}{132} = 9.1 - j5.14$

① $I_n = I_R - I_L = 9.1 - j5.14 - 1 = 8.1 - j5.14\ A$

$I_k = \frac{240\angle 0^\circ}{20} = 12\angle 0^\circ\ A$

② $I_1 = I_L + I_K = 1\angle 0^\circ + 12\angle 0^\circ = 13\ A$

③ $\bar{I}_2 = -I_R - I_K = -9.1 + j5.14 - 12$
$= -21.1 + j5.14\ A$

1.95 A coupling capacitor is used to block dc current from an amplifier as shown in Fig. 11.98(a). The amplifier and the capacitor act as the source, while the speaker is the load as in Fig. 11.98(b).

(a) At what frequency is maximum power transferred to the speaker?

(b) If $V_s = 4.6$ V rms, how much power is delivered to the speaker at that frequency?

DC sinyali geçirmemek için

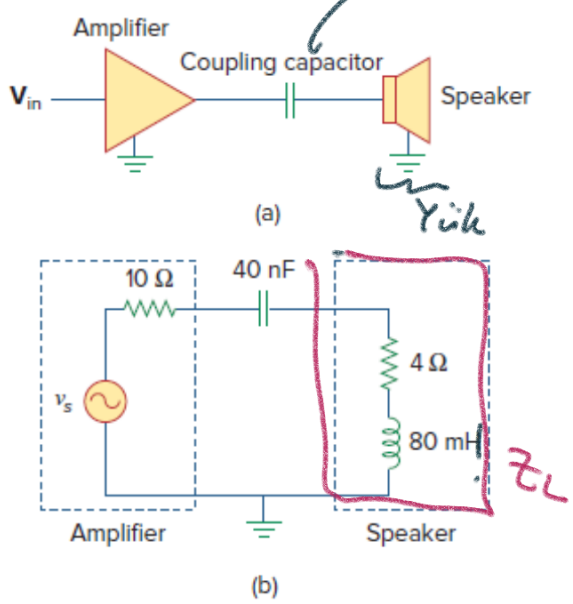

$$\frac{10^9}{j\omega 40}$$

Figure 11.98
For Prob. 11.95.

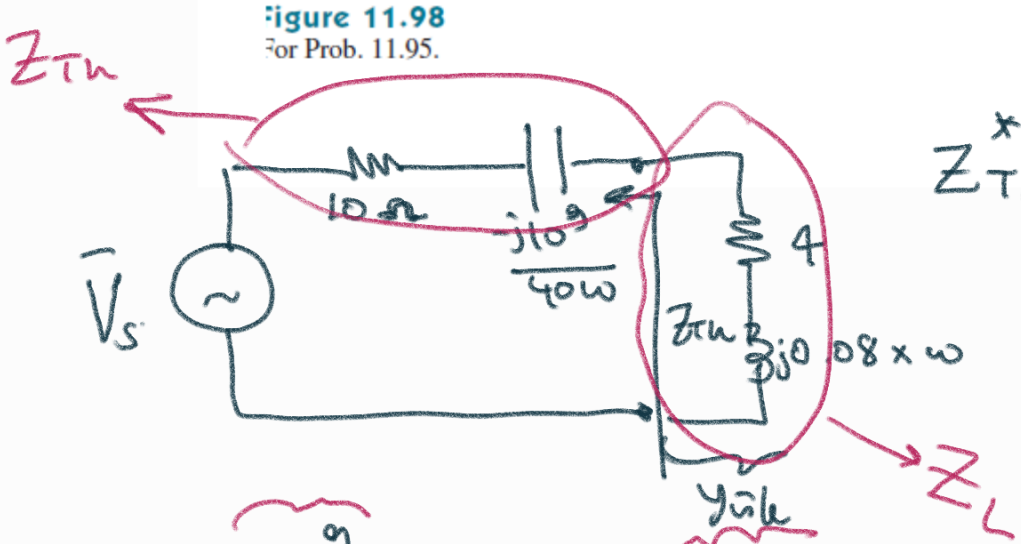

$Z_{Th}^* = Z_L$ olmalı

$$\rightarrow 10 - \frac{j10^9}{40\omega} = 4 - j\omega\, 0.08$$

Bu eşitlik sağlanamaz.

$10 \neq 4$

$$\rightarrow P_L = |I_L|^2 4$$

$$\max P_L \longrightarrow \max |I_L|$$

$$I_L = \frac{V_s}{14 + j0.08\omega - \frac{j10^9}{40\omega}}$$

$$|I_L| = \frac{|V_s|}{\left|14 + j0.08\omega - j10^9/40\omega\right|}$$

$$\rightarrow \max|I_L| \longrightarrow \min\left\{\left|14 + j0.08\omega - \frac{j10^9}{40\omega}\right|\right\}$$

$$\rightarrow \min\left\{\cancel{14}^2 + \left(0.08\omega - \frac{10^9}{40\omega}\right)^2\right\}$$

$$0 = \frac{d}{d\omega}\left(0.08\omega - \frac{10^9}{40\omega}\right)^2 = 2\underbrace{\left(0.08\omega - \frac{10^9}{40\omega}\right)}\left(0.08 + \frac{10^9}{40\omega^2}\right) = 0$$

$$\rightarrow 0.08\omega = \frac{10^9}{40\omega} \Rightarrow \omega = \sqrt{\frac{10^9}{3.2}} = 10^4\sqrt{\frac{10}{3.2}}$$

$$= 1.77\times10^4 \text{ rad/sn}$$

$$\cong 2818 \text{ Hz}$$

$$-\frac{j10^9}{2\pi\times2818} + j0.08\times2\pi\times2818 = 0 \longrightarrow$$

bu nedenle bu frekansta empedans minimum ve akım maks. olur. Gerilim maks. güç aktarılır.

b) 2818 Hz frekansta

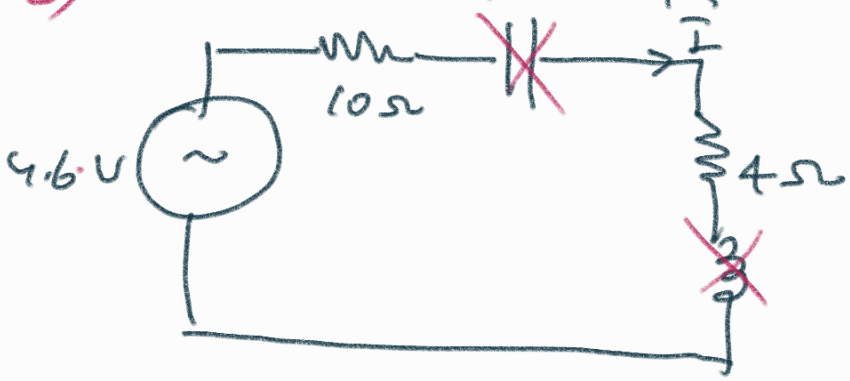

$$I = \frac{4.6}{14} = 0.11\text{A}$$

$$P_{4\Omega} = |I|^2 R$$

$$= 0.11^2 \times 4$$

$$= 52\text{mW}$$

CHAPTER 12: ÜÇ FAZLI DEVRELER

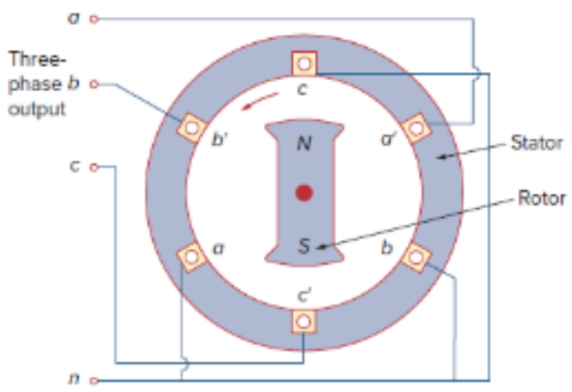

Figure 12.4
A three-phase generator.

Rotor saat yönünün tersine döndüğünde.

$$\left.\begin{aligned}\bar{V}_a &= V_p \angle 0^\circ \\ \bar{V}_b &= V_p \angle -120^\circ \\ \bar{V}_c &= V_p \angle -240^\circ\end{aligned}\right\} \text{ abc dizisi denir}$$

Rotor saat yönüne dönerse

$$\left.\begin{aligned}\bar{V}_a &= V_p \angle 0^\circ \\ \bar{V}_c &= V_p \angle -120^\circ \\ \bar{V}_b &= V_p \angle -240^\circ\end{aligned}\right\} \text{ acb dizisi}$$

$$\bar{V}_a + \bar{V}_b + \bar{V}_c = 0$$

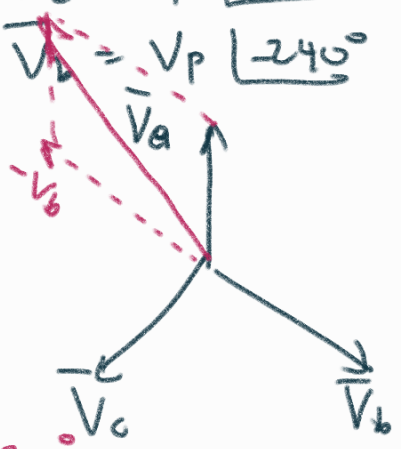

$$\bar{V}_{ab} = \bar{V}_a - \bar{V}_b = \sqrt{3}\,\bar{V}_a \angle +30^\circ$$

$$\bar{V}_{bc} = \bar{V}_b - \bar{V}_c = \sqrt{3}\,\bar{V}_b \angle +30^\circ$$

$$\bar{V}_{ca} = \bar{V}_c - \bar{V}_a = \sqrt{3}\,\bar{V}_c \angle +30^\circ$$

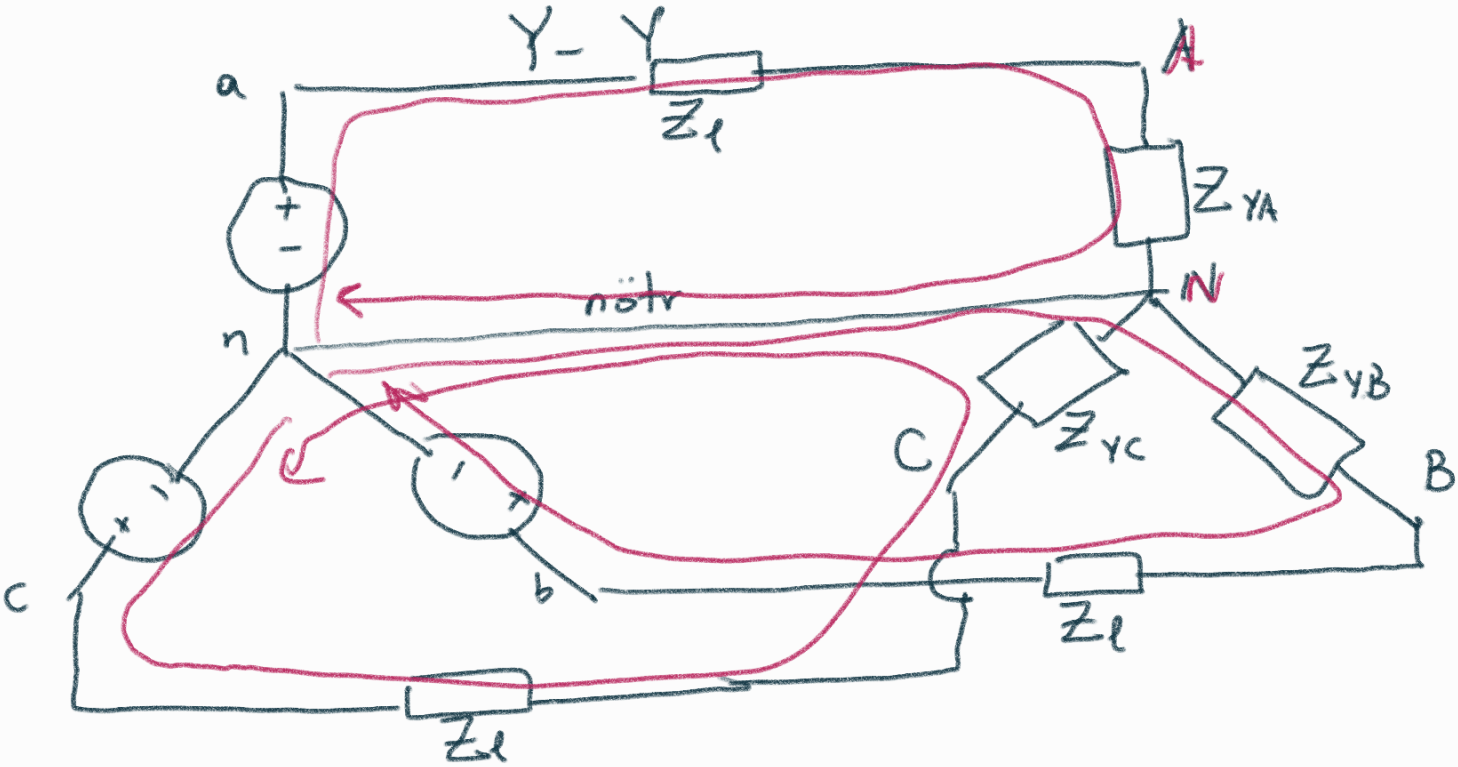

Hat akımı : I_{aA} — Faz akımı : I_{AN}

I_{bB} — I_{BN}

I_{cC} — I_{CN}

Y bağlantılı yükte hat ve faz akımları eşit.

Hat gerilimi (Line voltage hatlar arası gerilim) V_{AB}, V_{BC}, V_{CA} — Faz gerilimi : V_{AN}, V_{BN}, V_{CN}

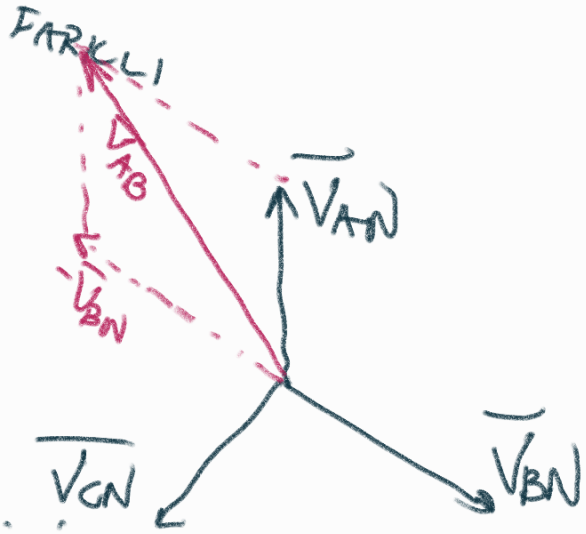

$$\bar{V}_{AB} = \bar{V}_{AN} - \bar{V}_{BN}$$
$$= \sqrt{3}\,\bar{V}_{AN} \angle 30^\circ$$

Y bağlantılı yükte hat gerilimi faz geriliminin $\sqrt{3}$ katı ve 30° ileridedir.

$$\bar{V}_{BC} = \sqrt{3}\,\bar{V}_{BN} \angle 30^\circ \qquad \bar{V}_{CA} = \sqrt{3}\,\bar{V}_{CN} \angle 30^\circ$$

12.3 Given a balanced Y-connected three-phase generator with a line-to-line voltage of $\mathbf{V}_{ab} = 100\angle 45^\circ$ V and $\mathbf{V}_{bc} = 100\angle 165^\circ$ V, determine the phase sequence and the value of $\mathbf{V}_{ca}$.

acb

V_{ca}

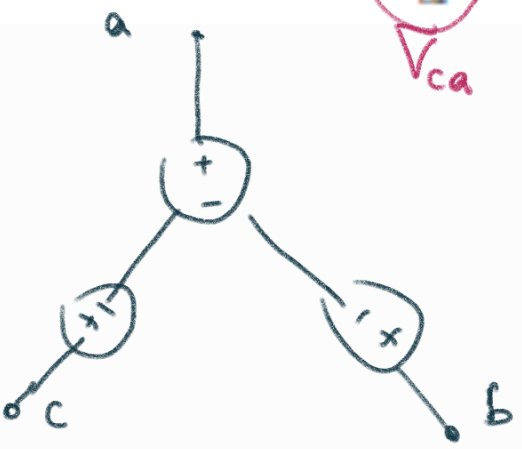

$$\left.\begin{aligned} \bar{V}_{ab} &= 100\angle 45^\circ \\ \bar{V}_{bc} &= 100\angle 165^\circ \\ \bar{V}_{ca} &= 100\angle -75^\circ \end{aligned}\right\} \text{ acb sırası}$$

$45^\circ \rightarrow -75^\circ \rightarrow -195^\circ$ $(+165^\circ)$

$\bar{V}_{ab}$ $\quad \bar{V}_{ca}$ $\quad \bar{V}_{bc}$

Yükler dengeli olduğunda, nötr'den akım geçmez ve sanki 3 faz, 3 ayrı devre gibi analiz edilebilir.

Dengeli

$$\underbrace{\begin{aligned} I_{AN} &= I_p \angle 0^\circ \\ \bar{I}_{BN} &= I_p \angle -120^\circ \\ I_{CN} &= I_p \angle -240^\circ \end{aligned}}_{abc \text{ için}} \Bigg\} \quad \bar{I}_{AN} + \bar{I}_{BN} + \bar{I}_{CN} = \phi$$

12.8 In a balanced three-phase Y-Y system, the source is an *acb* sequence of voltages and $\mathbf{V}_{an} = 120\angle 35^\circ$ V rms. The line impedance per phase is $(1 + j2)\ \Omega$, while the per-phase impedance of the load is $(11 + j14)\ \Omega$. Calculate the line currents and the load voltages.

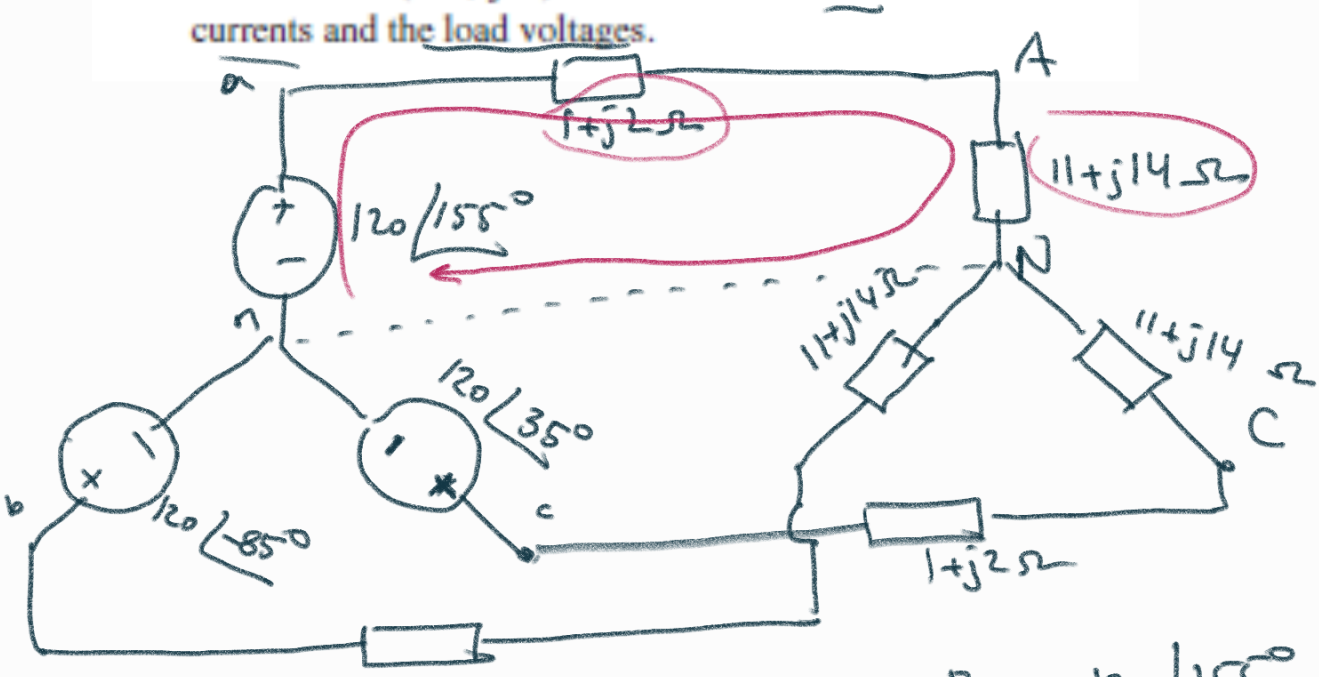

hat akımları: $I_{aA} = \dfrac{120\angle 155^\circ}{12+j16} = \dfrac{120\angle 155^\circ}{20\angle 53^\circ} = 6\angle 102^\circ$

$\bar{I}_{cC} = 6\angle -18^\circ$ A

$\bar{I}_{bB} = 6\angle -138^\circ$ A

yük gerilimleri: $\bar{V}_{AN} = \bar{I}_{AN}(11+j14)$

$= \bar{I}_{aA}(11+j14) = 6\angle 102^\circ (11+j14)$

$= 6\sqrt{317}\angle 102^\circ + 52^\circ$

$\bar{V}_{AN} \cong 107\angle 154^\circ$ V

$\bar{V}_{CN} = 107\angle 34^\circ$ V $\quad \bar{V}_{BN} = 107\angle -86^\circ$ V

Y-Δ bağlantı:

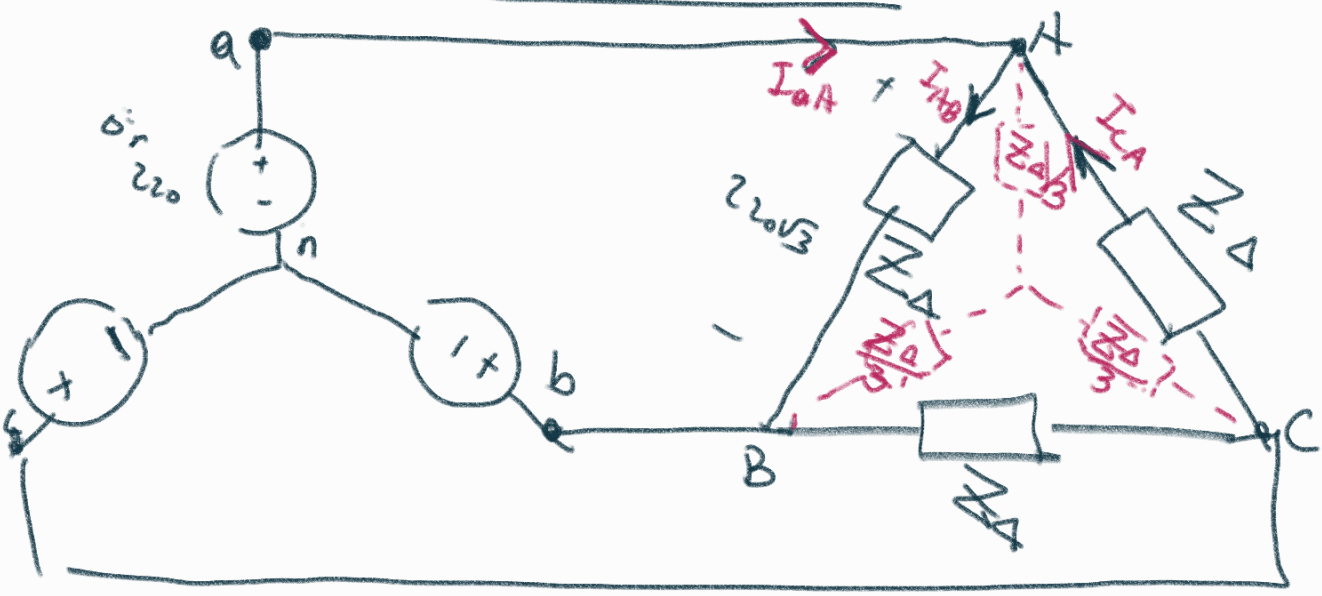

bu Y-Y'ye çevrilebilir

$Z_\Delta = 3Z_Y$ olarak

Hat akımı

I_{aA}

I_{bB}

I_{cC}

$\rightarrow \bar{I}_{aA} + \bar{I}_{CA} = \bar{I}_{AB}$

$\bar{I}_{aA} = \bar{I}_{AB} - \bar{I}_{CA}$

Faz akımı

$\bar{I}_{AB} = \sqrt{3}\,\bar{I}_{aA}\angle 30^\circ$

$I_{BC} = \sqrt{3}\,I_{bB}\angle -30^\circ$

I_{CA}

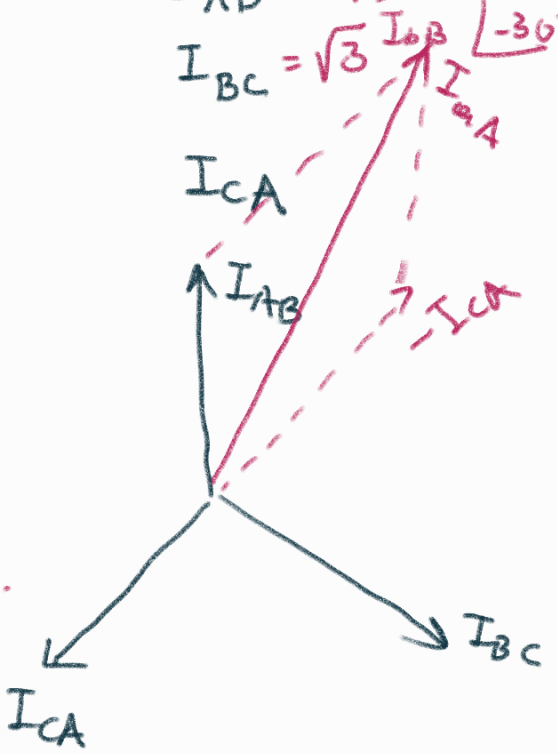

Δ yükte

hat akımı faz akımının $\sqrt{3}$ katı ve 30° geridedir.

Hat gerilimi: $V_{ab} = V_{AB}$

Faz gerilimi: V_{AB}

Δ yükte hat gerilimi = Faz gerilimi.

Güç hesabı:

Hem Y, hem de Δ bağlantılı yük için ortalama güç: $\boxed{P = \sqrt{3}\, V_L I_L \cos\theta}$

V_L: hat gerilimi, I_L: hat akımı, θ: yükün açısı

12.13 In the balanced three-phase Y-Δ system in Fig. 12.46, find the line current I_L and the average power delivered to the load.

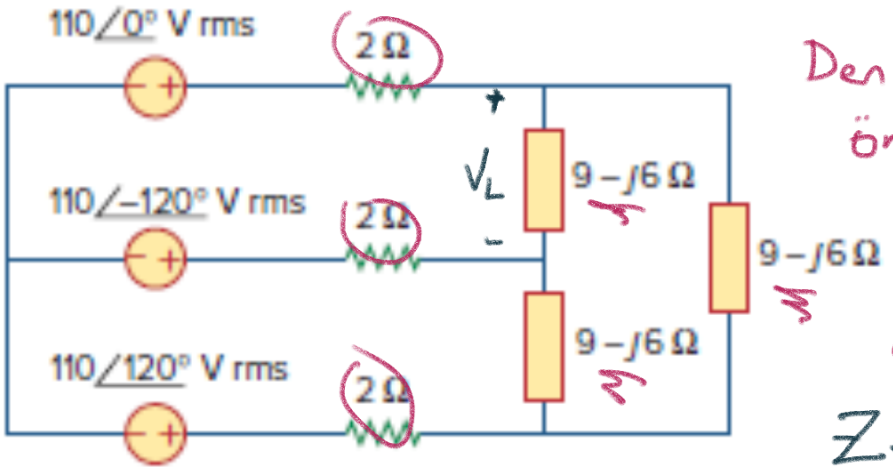

Figure 12.46
For Prob. 12.13.

Dengeli bir sistem. Önce Δ-Y dönüşümü yapmalıyız. O zaman analiz çok basitleşecek.

$$Z_Y = \frac{Z_\Delta}{3}$$

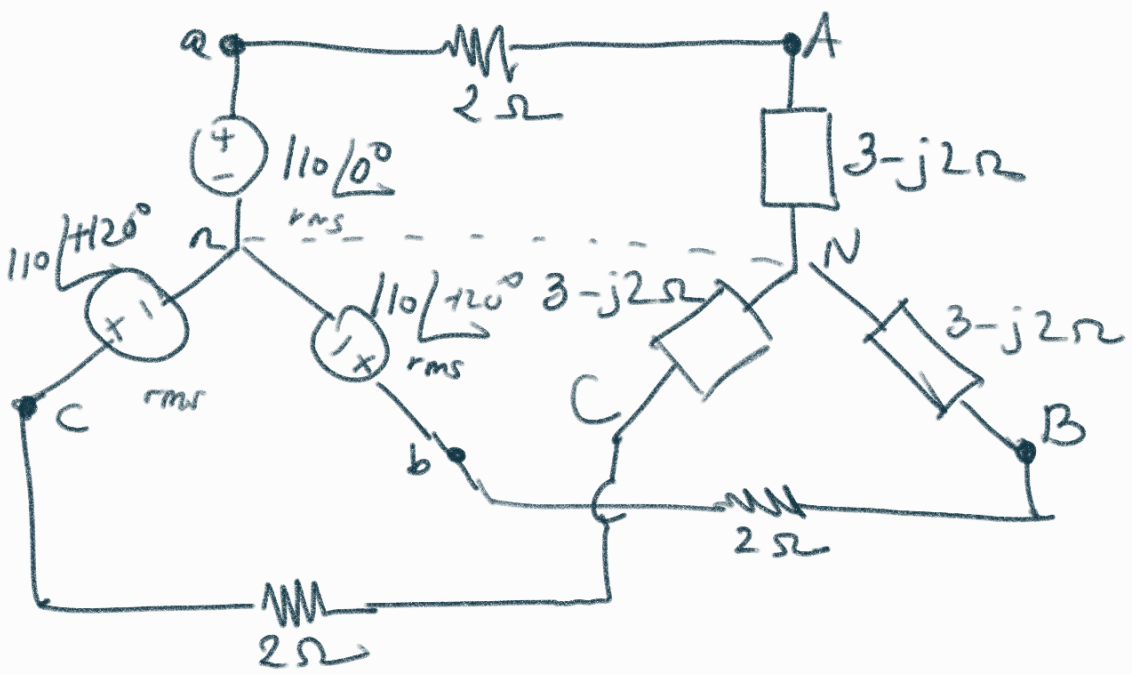

Hat akımları:

$$I_{aA} = \frac{110\angle 0^\circ}{5 - j2} = \frac{110}{\sqrt{29}}\angle 21.8^\circ \text{ A}$$

$$I_L = \frac{110}{\sqrt{29}} = 20.43 \text{ A}$$

$$\bar{V}_{AN} = 20.43\angle 21.8^\circ \times (3-j2) = 20.43\sqrt{13}\angle 21.8^\circ - 33.7^\circ$$

$$\boxed{\bar{V}_{AN} = 73.66\angle -12.1^\circ}$$

$$\bar{V}_{AB} = \sqrt{3}\,\bar{V}_{AN}\angle 30^\circ$$

$$\bar{V}_{AB} \rightarrow \bar{V}_{AN} - \bar{V}_{BN}$$

$$\boxed{\bar{V}_{AB} = 127.58\angle 17.9^\circ}$$

$$V_L = 127.58$$

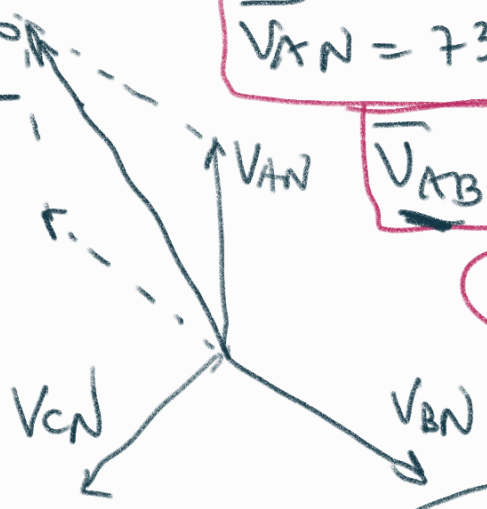

$$P = \sqrt{3} \times 127.58 \times 20.43 \times \cos(\theta) \rightarrow \frac{3}{\sqrt{13}}$$

$$= \sqrt{3} \times 127.58 \times 20.43 \times 0.83$$

$$= 3747 \text{ Watt}$$

$$\tan^{-1}\left(-\frac{2}{3}\right)$$

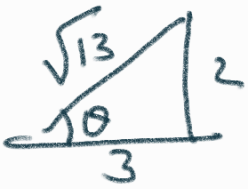

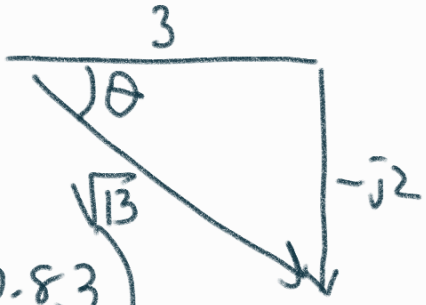

$$\left(\cos\theta = \frac{3}{\sqrt{13}} = 0.83\right)$$

12.18 If $\mathbf{V}_{ax} = 220\angle 60^\circ$ V in the network of Fig. 12.49, find the load phase currents $\mathbf{I}_{AB}$, $\mathbf{I}_{BC}$, and $\mathbf{I}_{CA}$.

rms alalım

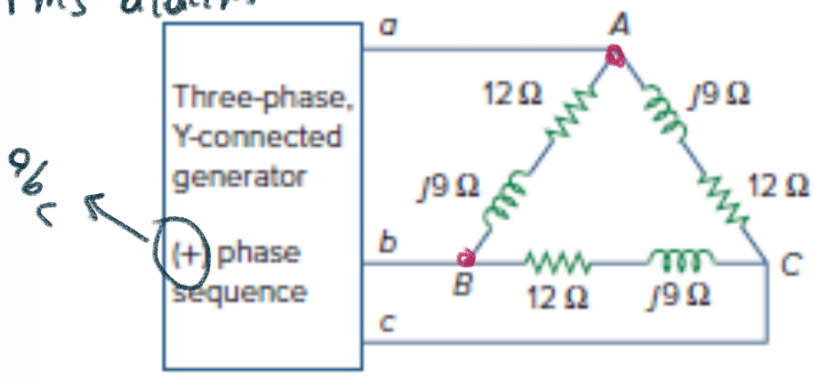

abc

Figure 12.49
For Prob. 12.18.

$$\bar{V}_{an} = 220\angle 60^\circ \text{ V}$$

$$\bar{V}_{bn} = 220\angle -60^\circ \text{ V}$$

$$\bar{V}_{cn} = 220\angle -180^\circ \text{ V}$$

$$\bar{V}_{ab} = \sqrt{3}\,\bar{V}_{an}\angle 30^\circ$$

$$= 220\sqrt{3}\angle 90^\circ$$

yıldız hat gerilimi = yıldız faz gerilimi

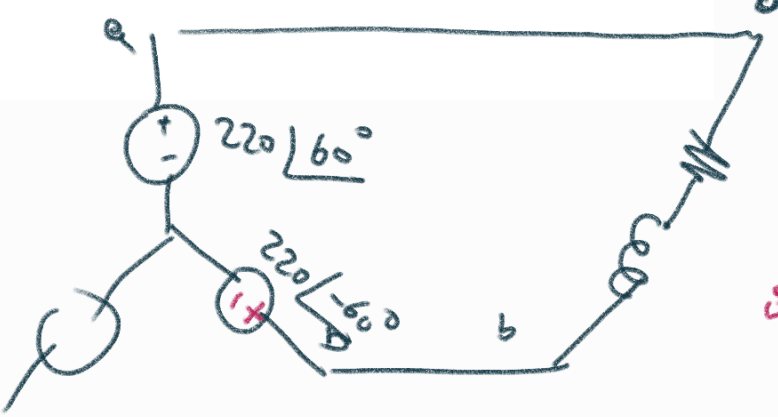

$$\bar{I}_{ab} = \frac{220\sqrt{3}\angle 90^\circ}{15\angle 37^\circ} = 25.4\angle 53^\circ \text{ A}$$

$$\bar{I}_{bc} = 25.4\angle -67^\circ \text{ A}$$

$$\bar{I}_{ca} = 25.4\angle -187^\circ \text{ A}$$

$$\boxed{P = \sqrt{3}\, V_L I_L \cos\theta}$$

208

12.30 In Fig. 12.56, the rms value of the line voltage is 208 V. Find the average power delivered to the load.

$208 = |V_{ab}|$ $\quad V_L = 208 \text{ V}_{rms}$ $\quad I_L = ?$ $\quad V_L = |V_{ab}|$

I_L → hat akımının büyüklüğü

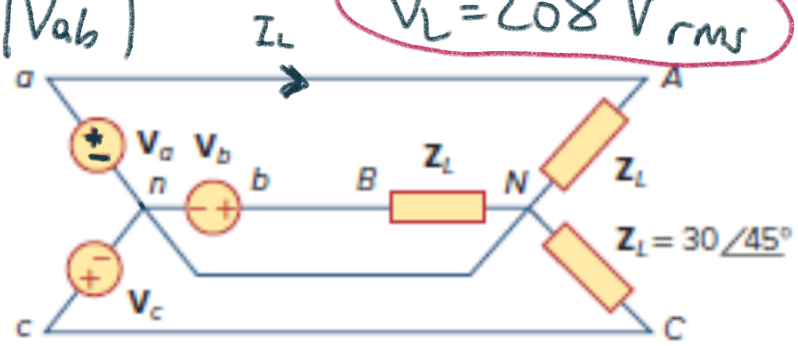

Figure 12.56
For Prob. 12.30.

$$I_L = \frac{|V_{an}|}{30}$$

$$\cos\theta = \cos 45 = \frac{1}{\sqrt{2}}$$

$$I_L = \frac{208}{\sqrt{3}}\,\frac{1}{30} = 4 \text{ A}$$

12.81 A professional center is supplied by a balanced three-phase source. The center has four balanced three-phase loads as follows:

Load 1: 150 kVA at 0.8 pf leading
Load 2: 100 kW at unity pf
Load 3: 200 kVA at 0.6 pf lagging
Load 4: 80 kW and 95 kVAR (inductive)

If the line impedance is $0.02 + j0.05\ \Omega$ per phase and the line voltage at the loads is 480 V, find the magnitude of the line voltage at the source.

$$\times\ 208 \times 4 \times \frac{1}{\sqrt{2}} \cong 1000 \text{ Watt}$$

$$|V_{an}| = \frac{|V_{ab}|}{\sqrt{2}} = \frac{208}{\sqrt{3}}$$

12.36 A 4200-V three-phase transmission line has an impedance of $4 + j\ \Omega$ per phase. If it supplies a load of 1 MVA at 0.75 power factor (lagging), find:

(a) the complex power
(b) the power loss in the line
(c) the voltage at the sending end

$V_L = 4200 \text{ V (rms)}$

$4 + j$: Hat empedansı

1MVA : Görünen güç

a)

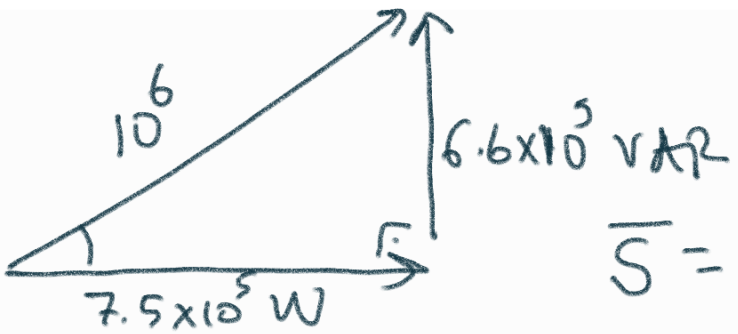

$$\bar{S} = 7.5\times10^5 + j\,6.6\times10^5 \text{ VA}$$

b) Hattaki güç kayıbı = $|I_L|^2 * 4$

Hat empedansı $4+j\Omega$

$$\sqrt{3}\,\underset{\downarrow\,4200}{V_L}\,I_L = 10^6 \Rightarrow I_L = \frac{10^6}{4200\sqrt{3}} = \underline{\underline{137.5\ A}}$$

akımın büyüklüğü

$$P_{loss} = (137.5)^2 \times 4 = \underline{\underline{75{,}6\ kW}}$$

c)

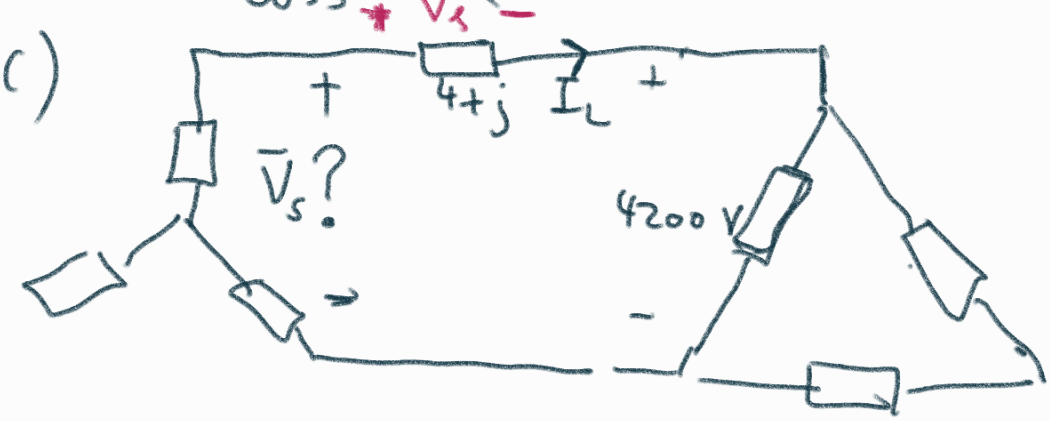

$$\underset{\downarrow}{\bar{S}} = 4200\angle 0^\circ\ \bar{I}_L^*$$

$$\left(\frac{750000+j660000}{4200}\right)^* = \bar{I}_L = 178.6 - j157.1\ A$$

$$\bar{V}_\ell = (4+j)(178.6 - j157.1) =$$

$$\bar{V}_s = \bar{V}_\ell + \bar{V}_L$$ bulunur.

12.39 Find the real power absorbed by the load in Fig. 12.58.

Dengeli bir 3-faz

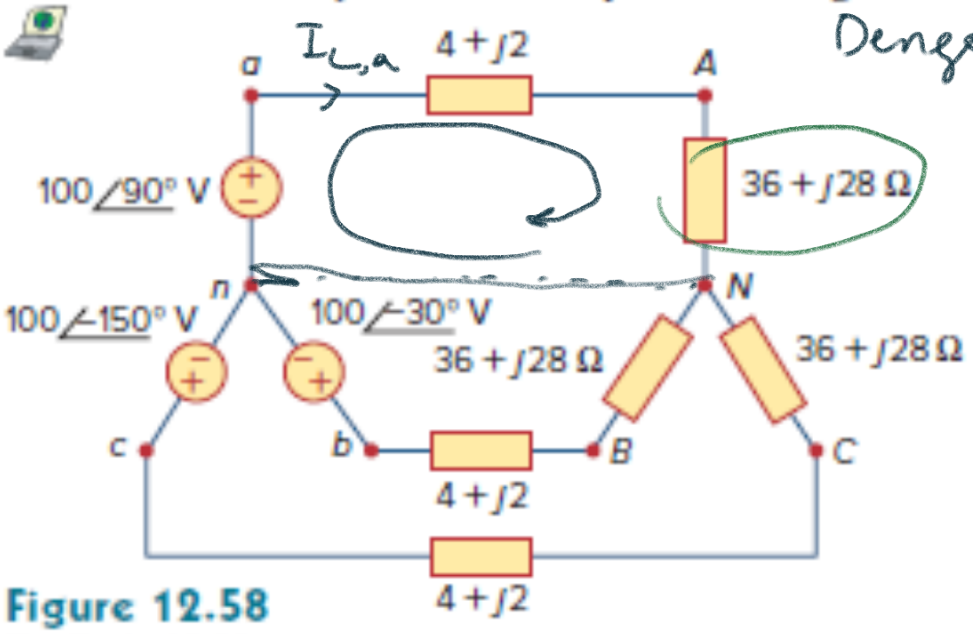

Figure 12.58
For Prob. 12.39.

$$I_{L,a} = \frac{100\angle 90^\circ}{40 + j30} = \frac{100\angle 90^\circ}{50\angle 37^\circ} = 2\angle 53^\circ \text{ A}$$

$$P_{L,a} = \frac{1}{2}|I_{L,a}|^2 \times 36 = \frac{1}{2} \times 4 \times 36 = 72 \text{ W}$$

$$P_L = 3 \times 72 = 216 \text{ W}$$

(Not: Bu soruda $\sqrt{3}\, V_L I_L \cos\theta$ formülünü kullanmadık)

yükteki hat gerilimini bulmak gerekir

yükün açısı

11.37 The output of the balanced positive-sequence three-phase source in Fig. P11.37 is 41.6 kVA at a lagging power factor of 0.707. The line voltage at the source is 240 V (rms)

görünür

a) Find the magnitude of the line voltage at the load.

b) Find the total complex power at the terminals of the load.

Figure P11.37

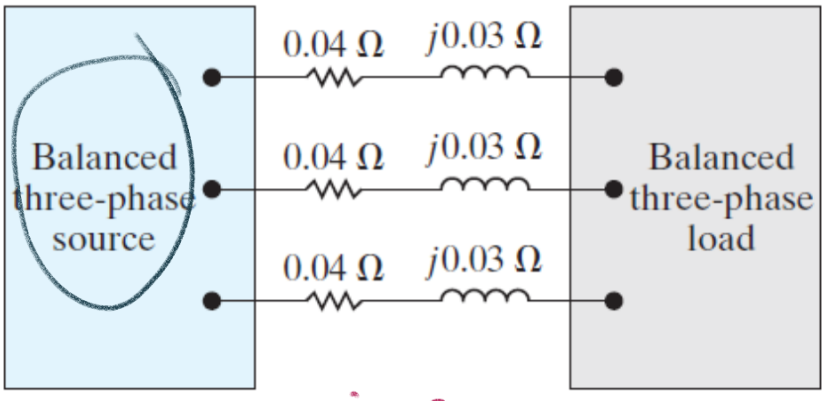

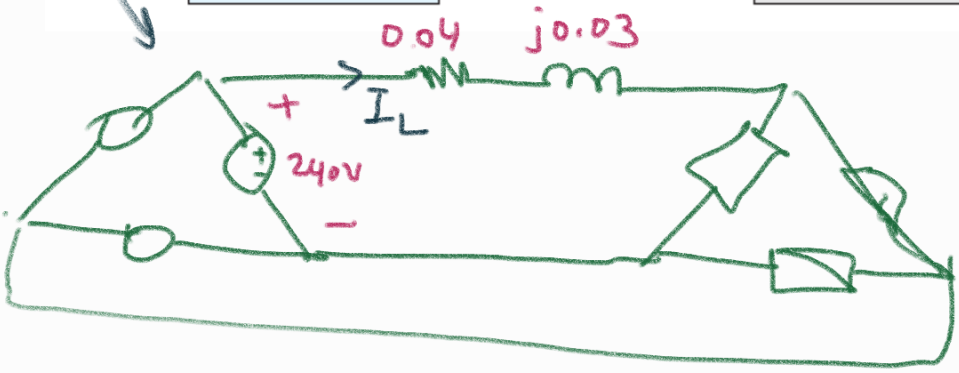

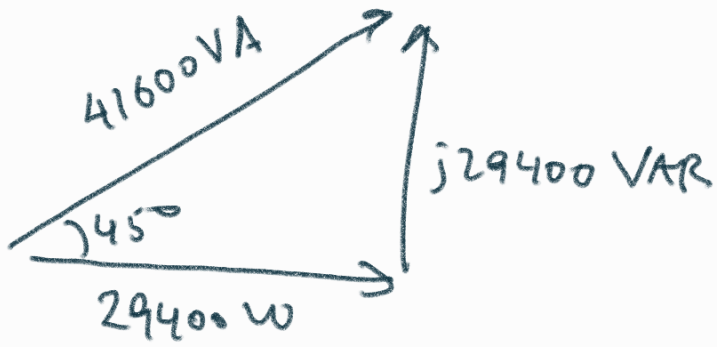

$$\sqrt{3}\, V_L I_L = 41600 \Rightarrow I_L = 100\text{ A}$$

$V_L \to 240$

$I_L \to$ hat akımı büyüklüğü

$$\frac{29400 + j29400}{3} = 240\, I_L^*$$

$$\left(\frac{9800 + j9800}{240}\right)^* = I_L = 40.83 - j40.83\text{ A}$$

$$V_{loss} = (40.83 - j40.83)(0.04 + j0.03)$$
$$= 1.63 + j1.22 - j1.63 + 1.22$$
$$= 2.86 - j0.4$$
$$V_L = 240\angle 0^\circ - (2.86 - j0.4)$$
$$|V_L| = 237.1 \text{ V}$$

b)

Hattalı kompleks güç

$$= 3 \times |I_L|^2 \times (0.04 + j0.03) = 3 \times 40.83^2 \times 2 \times (0.04 + j0.03)$$
$$= 10000 \cdot (0.04 + j0.03)$$
$$\bar{S}_\ell = 400 + j300$$
$$\bar{S}_s - \bar{S}_\ell = \bar{S}_L = 29400 + j29400 - 400 - j300$$
$$= 29000 - j29100 \text{ VA}$$

11.35 A three-phase line has an impedance of $0.1 + j0.8\ \Omega/\phi$. The line feeds two balanced three-phase loads connected in parallel. The first load is absorbing a total of 630 kW and absorbing 840 kVAR magnetizing vars. The second load is Y-connected and has an impedance of $15.36 - j4.48\ \Omega/\phi$. The line-to-neutral voltage at the load end of the line is 4000 V rms. What is the magnitude of the line voltage at the source end of the line?

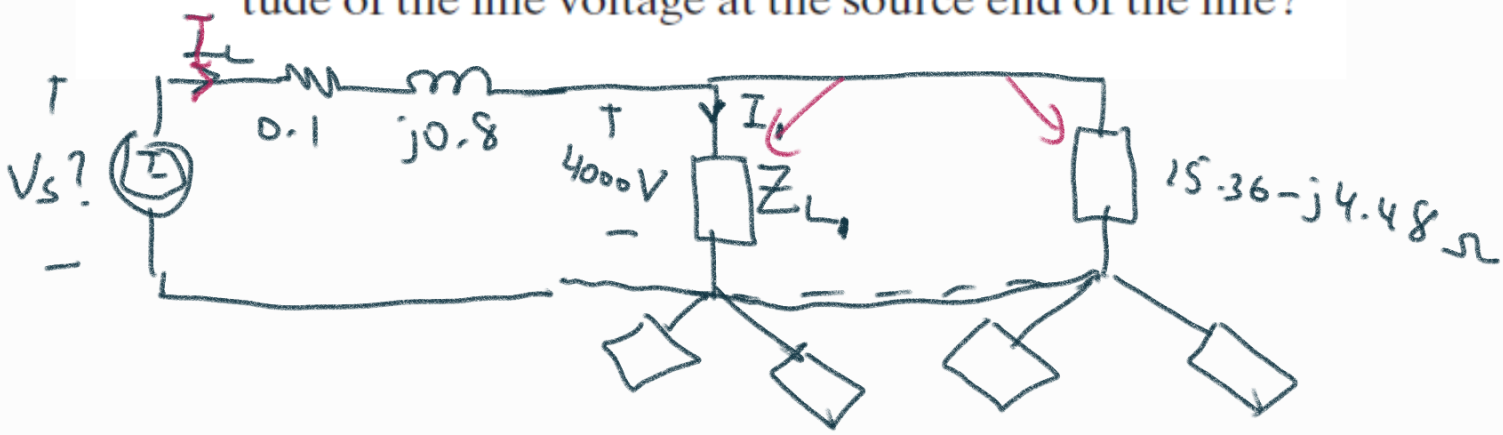

$$\bar{S}_{L_1} = \frac{630000 + j\,840000}{3} \text{ VA}$$

$$= 210000 + j\,280000 = \frac{4000^2}{Z_{L_1}^*}$$

$$\Rightarrow Z_{L_1} = \frac{16\,000\,000}{210000 - j\,280000}$$

$$= \frac{16000}{350\angle -53^\circ} = 45.71\angle 53^\circ$$

$$= 27.42 + j\,36.57 = Z_{L_1}$$

$$Z_{L_2} = 15.36 - j\,4.48$$

$$Z_L = Z_{L_1} // Z_{L_2}$$

$$I_{L_1} = \frac{4000}{Z_{L_1}} \qquad I_{L_2} = \frac{4000}{Z_{L_2}}$$

$$I_L = I_{L_1} + I_{L_2}$$ hattaki akım

$$\boxed{V_S = 4000 + I_L \times (0.1 + j\,0.8)}$$

12.47 The following three parallel-connected three-phase loads are fed by a balanced three-phase source:

Load 1: 250 kVA, 0.8 pf lagging

Load 2: 300 kVA, 0.95 pf leading

Load 3: 450 kVA, unity pf

If the line voltage is 13.8 kV rms, calculate the line current and the power factor of the source. Assume that the line impedance is zero.

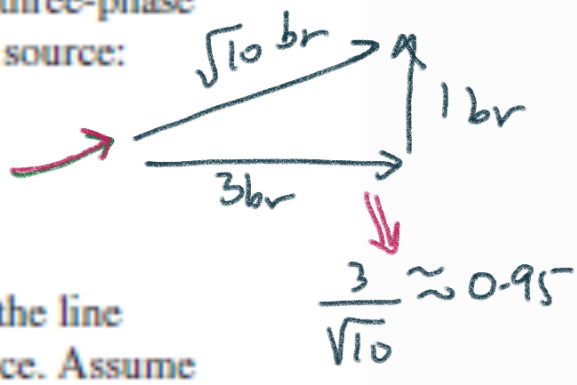

$$\sqrt{3}\, V_L I_L = S$$

$$\sqrt{3}\, V_L I_L \cos\theta = P$$

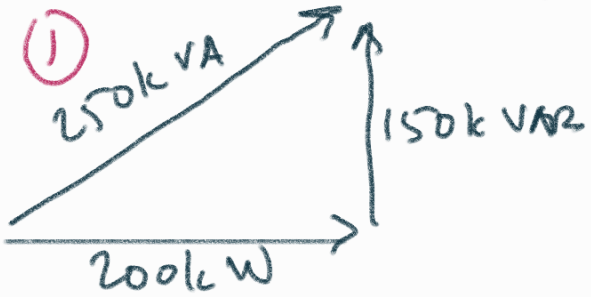

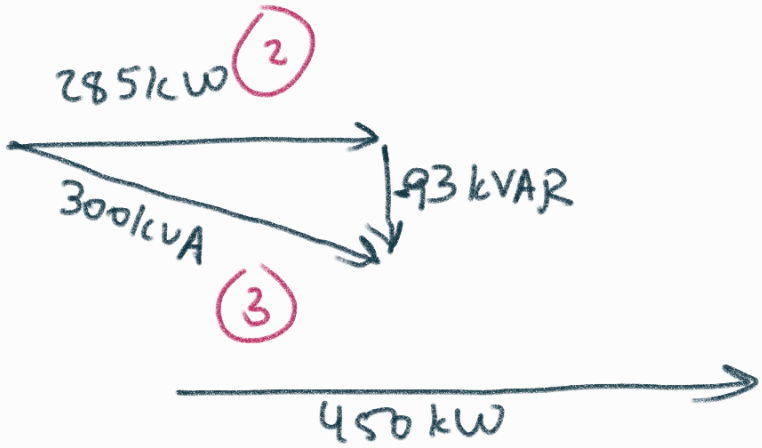

$S_{eş} =$

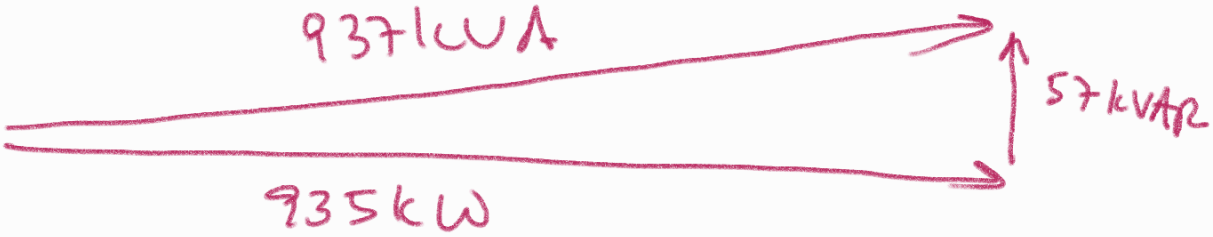

$$\text{g.f.} = \frac{935}{937} \quad \text{(takip eden)}$$

$$\sqrt{3}\, V_L I_L = 937000$$

$V_L \to 13800$

$$I_L = \frac{937000}{\sqrt{3}\; 13800} = 39.2\,A \quad \text{(büyüklük)}$$

12.80 A balanced three-phase source furnishes power to the following three loads:

Load 1: 6 kVA at 0.83 pf lagging

Load 2: unknown

Load 3: 8 kW at 0.7071 pf leading

If the line current is 84.6 A rms, the line voltage at the load is 208 V rms, and the combined load has a 0.8 pf lagging, determine the unknown load.

$$\sqrt{3} \times 84.6 \times 208 = S_{eq} = 30479 \text{ VA}$$

$\bar{S}_{eq}$:

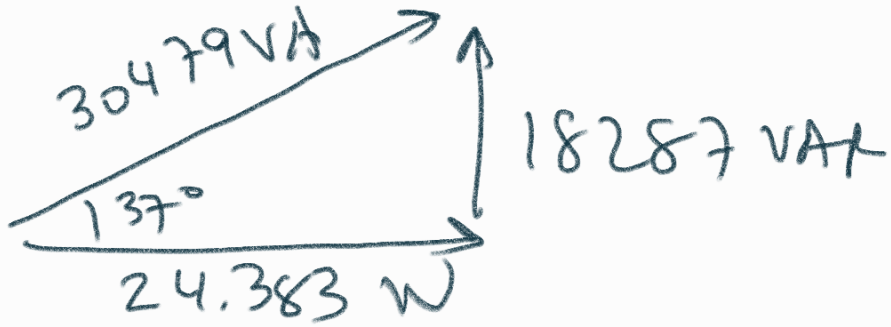

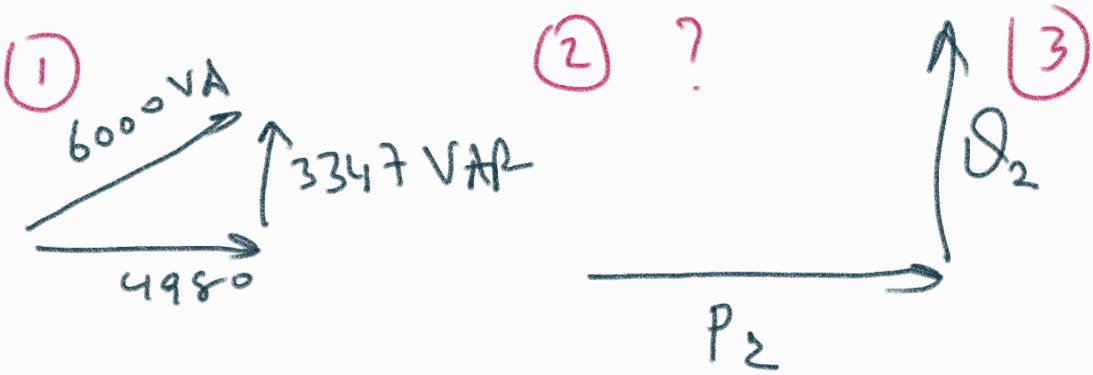

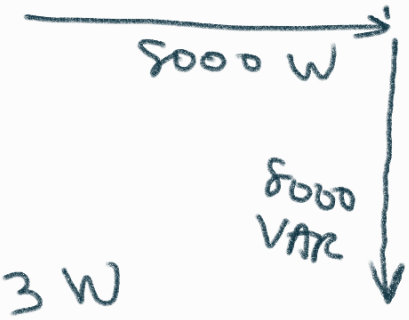

$$P_2 = 24383 - 4980 - 8000 = 11403 \text{ W}$$

$$Q_2 = 18287 - 3347 + 8000 = 22940 \text{ VAR}$$

$$S_2 = 11403 + j\,22940 \text{ VA}$$

12.55 A three-phase supply, with the line-to-line voltage of 240 V rms, has the unbalanced load as shown in Fig. 12.62. Find the line currents and the total complex power delivered to the load.

$Z_\Delta = 3 Z_Y$

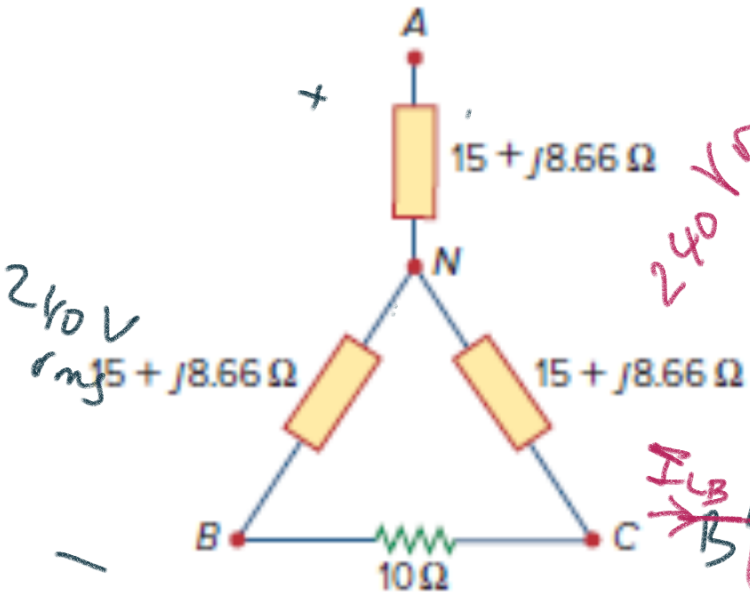

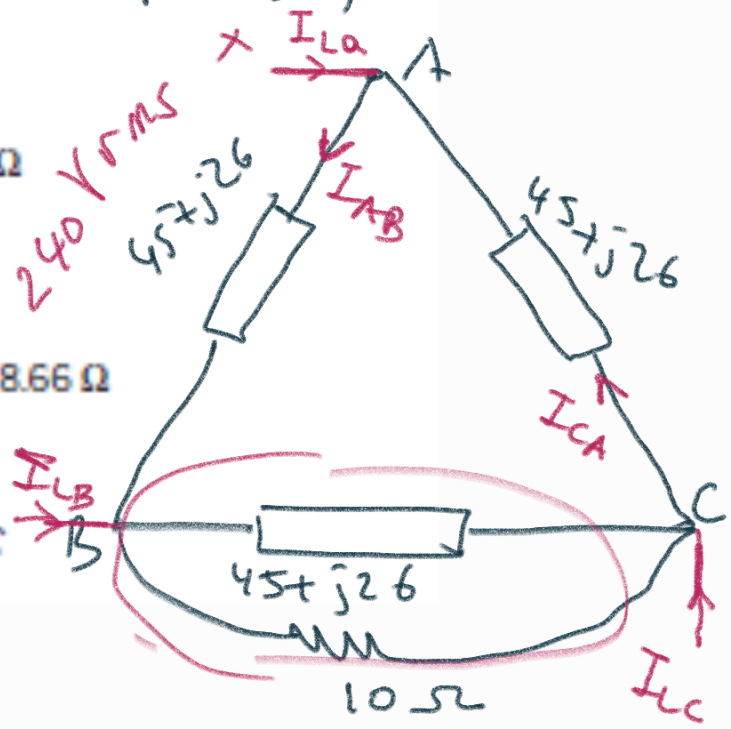

$$I_{AB} = \frac{240}{45+j26} \qquad I_{BC} = \frac{240\angle -120^\circ}{(45+j26)//10}$$

$$I_{CA} = \frac{240\angle +120^\circ}{45+j26}$$

$$\left.\begin{aligned} I_{AB} - I_{CA} &= I_{La} \\ I_{BC} - I_{AB} &= I_{LB} \\ I_{CA} - I_{BC} &= I_{LC} \end{aligned}\right\} \text{line currents}$$

$$\frac{|240|^2}{45-j26} + \frac{|240|^2}{(45+j26//10)^*} + \frac{|240|^2}{45-j26} = \overline{S}_{Total}$$

CHAPTER 13: MANYETIK BAĞLAŞIMLI DEVRELER

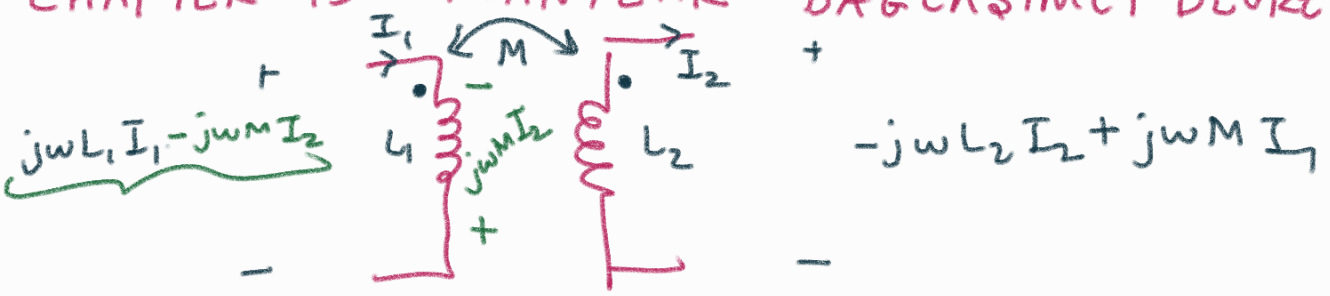

$M = k\sqrt{L_1 L_2}$

k → bağlaşım katsayısı (coupling coefficient)

M → karşılıklı endüktans
mutual inductance

$0 \leq k \leq 1$

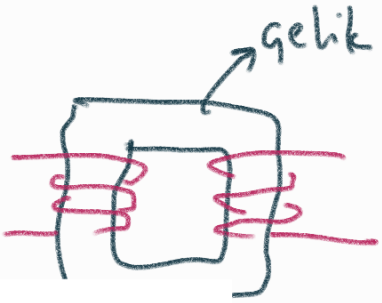

13.4 (a) For the coupled coils in Fig. 13.74(a), show that

$$L_{eq} = L_1 + L_2 + 2M$$

(b) For the coupled coils in Fig. 13.74(b), show that

$$L_{eq} = \frac{L_1 L_2 - M^2}{L_1 + L_2 - 2M}$$

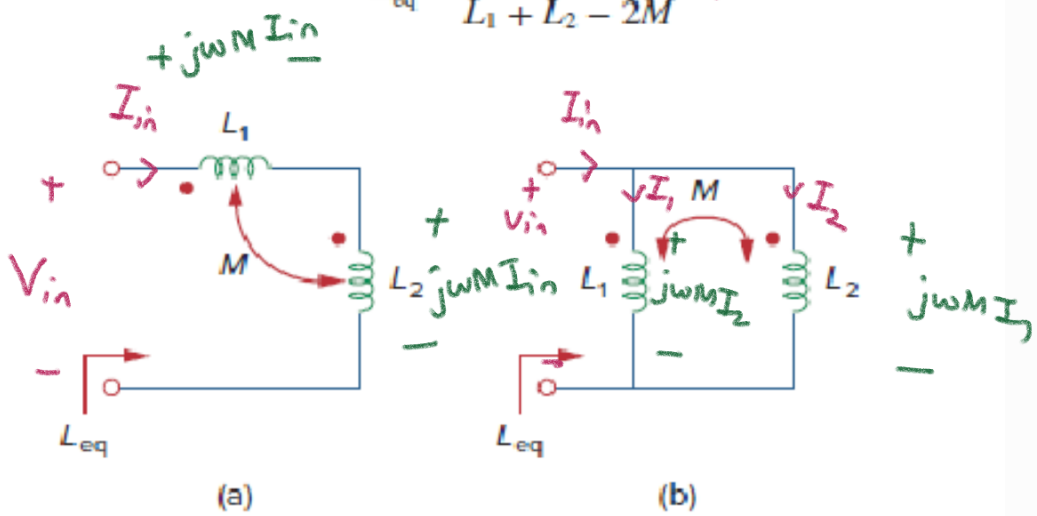

Figure 13.74
For Prob. 13.4.

a

$$\bar{V}_{in} = j\omega L_1 \bar{I}_{in} + j\omega L_2 \bar{I}_{in} + j\omega M I_{in} + j\omega M I_{in}$$

$$\bar{V}_{in} = \bar{I}_{in}\, j\omega (L_1 + L_2 + 2M)$$

$$\frac{\bar{V}_{in}}{\bar{I}_{in}} = j\omega \underbrace{(L_1 + L_2 + 2M)}_{L_{eq}}$$

(b) $j\omega L_1 I_1 + j\omega M I_2 = j\omega L_2 I_2 + j\omega M I_1 = V_{in}$

$I_{in} = I_1 + I_2$

$$L_1 I_1 + M I_2 = L_2 I_2 + M I_1$$

$$(L_1 - M) I_1 = (L_2 - M) I_2$$

$$I_{in} = I_1 + I_2 = I_1 + I_1 \frac{(L_1 - M)}{L_2 - M}$$

(1) $$I_{in} = I_1 \left(\frac{L_2 + L_1 - 2M}{L_2 - M} \right)$$

(2) $$V_{in} = j\omega M I_1 + j\omega L_2 I_1 \frac{L_1 - M}{L_2 - M}$$

$$V_{in} = I_1 \left(j\omega M + j\omega L_2 \frac{L_1 - M}{L_2 - M} \right)$$

$$\underbrace{\frac{V_{in}}{I_{in}}}_{L_{eq}} = \frac{(2)}{(1)} = \frac{j\omega \left(M + L_2 \frac{(L_1 - M)}{L_2 - M} \right)}{\frac{L_2 + L_1 - 2M}{L_2 - M}}$$

$$= j\omega \left(\frac{\cancel{L_2 M} - M^2 + L_1 L_2 - \cancel{L_2 M}}{L_2 + L_1 - 2M} \right)$$

$$L_{eq} = j\omega \left(\frac{L_1 L_2 - M^2}{L_1 + L_2 - 2M} \right)$$

13.9 Find $\mathbf{V}_x$ in the network shown in Fig. 13.78.

ML

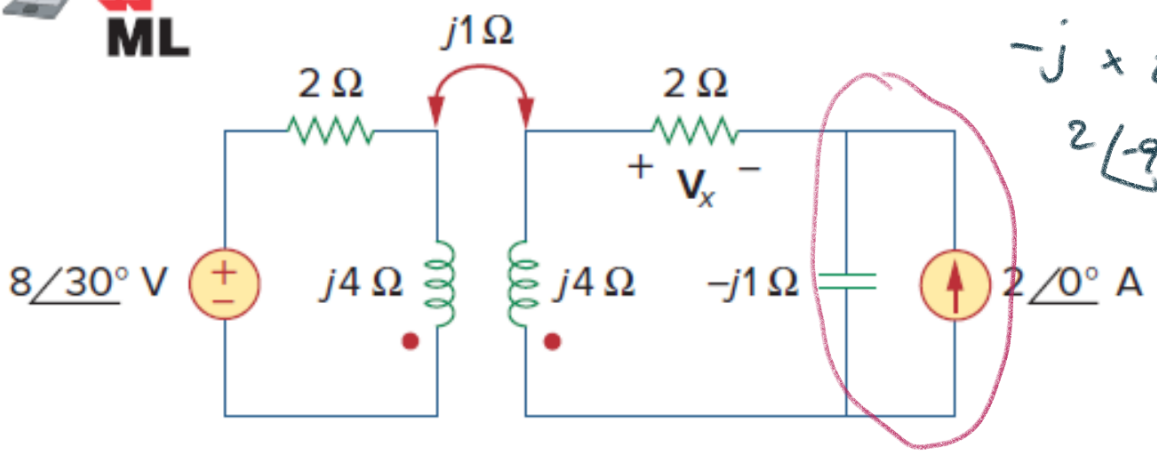

$-j \times 2\angle 0^\circ$

$2\angle -90^\circ = -j2$

Figure 13.78
For Prob. 13.9.

Bu tür devrelerde çevre akım yöntemi uygundur.

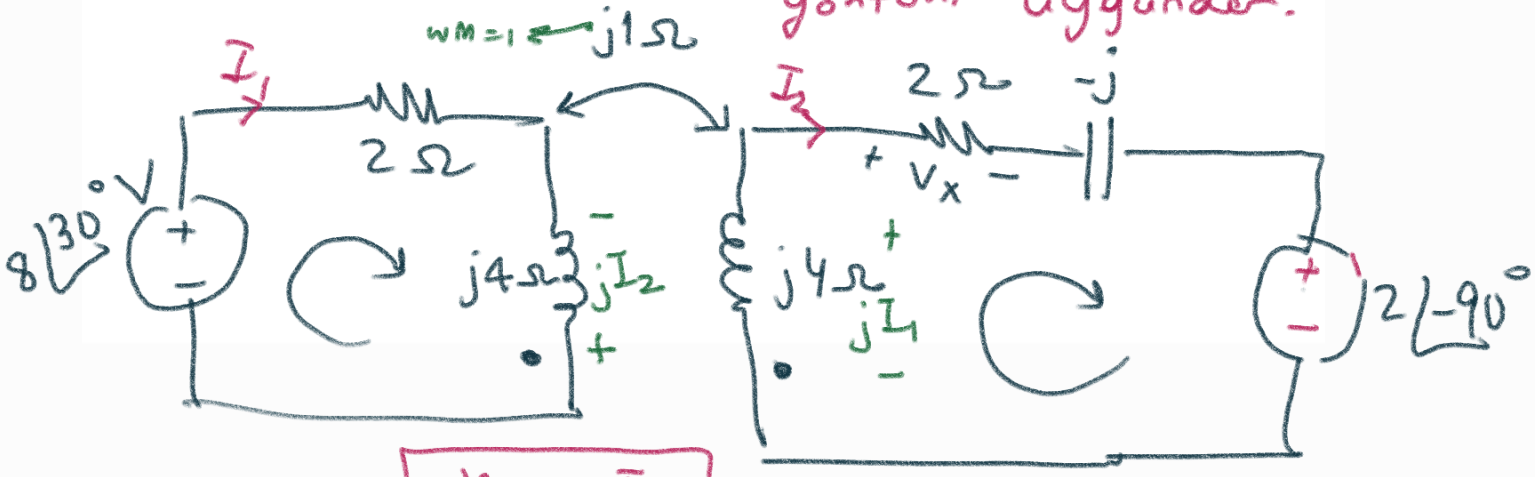

$$\boxed{V_x = 2I_2}$$

(1) $-8\angle 30^\circ + 2I_1 + j4I_1 - jI_2 = 0$

(2) $2\angle -90^\circ + j4I_2 + 2I_2 - jI_2 - jI_1 = 0$

(1) $(2+j4)I_1 - jI_2 = 8\angle 30^\circ \quad \times j$

(2) $-jI_1 + (2+j3)I_2 = -2\angle -90^\circ \quad \times (2+j4)$

+

$$\underbrace{\begin{bmatrix} 2+j4 & -j \\ -j & 2+j3 \end{bmatrix}}_{A} \underbrace{\begin{bmatrix} \bar{I}_1 \\ \bar{I}_2 \end{bmatrix}}_{I} = \underbrace{\begin{bmatrix} 8\angle 30^\circ \\ -2\angle -90^\circ \end{bmatrix}}_{b}$$

$$I_2 + (2+j3)(2+j4)I_2 = 8\angle 120^\circ + 2j(2+j4)$$

$$I_2\left[1+4+j8+j6-12\right] = 8\angle 120^\circ + 4j - 8$$

$$I_2 = \frac{8\angle 120^\circ + 4j - 8}{-7+j14}$$

$$I_2 = \frac{-4+j6.9+4j-8}{-7+j14} = \frac{-12+j10.9}{-7+j14}$$

$$V_x = 2I_2 = \frac{-24+j21.8}{-7+j14} = \frac{32.4\angle 180^\circ - 42.2^\circ}{15.7\angle 180^\circ - 64^\circ}$$

$$V_x = 2.06\angle 21.8^\circ \text{ V}$$

13.12 Determine the equivalent L_{eq} in the circuit of Fig. 13.81.

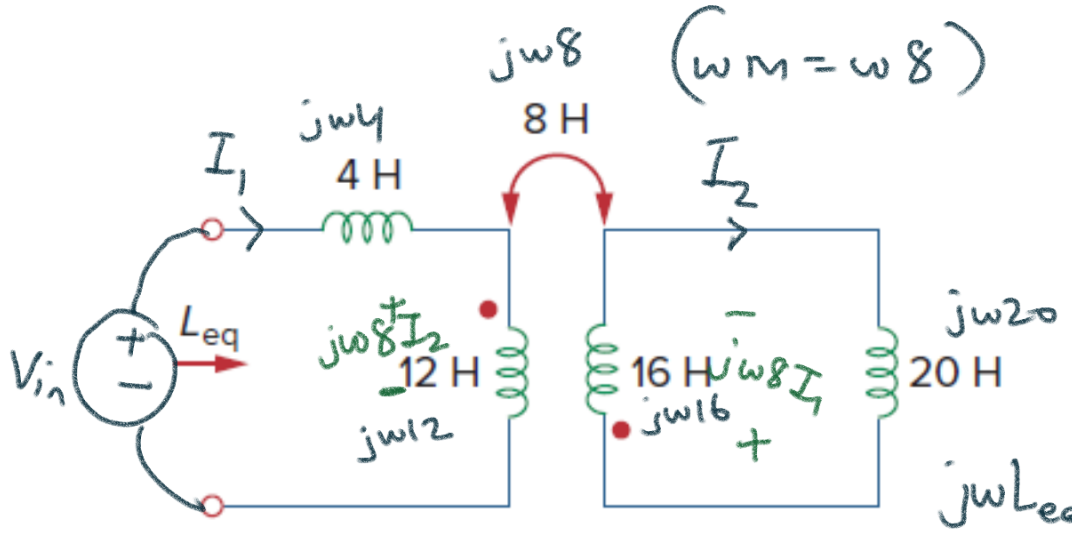

$$j\omega L_{eq} = \frac{\bar{V}_{in}}{\bar{I}_1}$$

Figure 13.81
For Prob. 13.12.

(1) $-V_{in} + j\omega 4 I_1 + j\omega 12 I_1 + j\omega 8 I_2 = 0$

(2) $\cancel{j\omega} 20 I_2 + \cancel{j\omega} 16 I_2 + \cancel{j\omega} 8 I_1 = 0$

(2) $36 I_2 = -8 I_1 \Rightarrow I_2 = \frac{-2}{9} I_1$

(1) $\bar{V}_{in} = j\omega 16 I_1 + j\omega 8 I_2$

$= j\omega 16 I_1 - j\omega \frac{8 \times 2}{9} I_1$

$\bar{V}_{in} = j\omega \frac{128}{9} \bar{I}_1$

$\frac{\bar{V}_{in}}{\bar{I}_1} = \cancel{j\omega} L_{eq} = \cancel{j\omega} \frac{128}{9}$

$$\boxed{L_{eq} = \frac{128}{9} H}$$

Yansıyan empedans formülü ile:

$Z_{eq} = j\omega 4 + j\omega 12 + \underbrace{\text{yansıyan empedans}}_{\frac{(\omega M)^2}{Z_2}}$

$= j\omega 16 + \frac{\omega^2 64}{j\omega 36}$

$Z_{eq} = j\omega 16 - j\omega \frac{16}{9} = j\omega \frac{128}{9}$

$$\boxed{L_{eq} = \frac{128}{9} H}$$

13.16 Obtain the Norton equivalent at terminals *a-b* of the circuit in Fig. 13.85.

ML

$I_N = I_{ab}$ $\quad V_{Th} = V_{ab}$

Z_{Th}

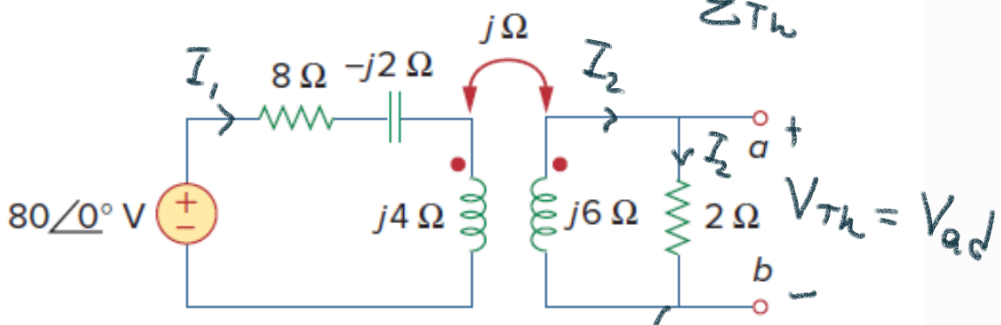

$(\bar{V}_{ab} = \bar{V}_{Th} = 2I_2)$

Figure 13.85
For Prob. 13.16.

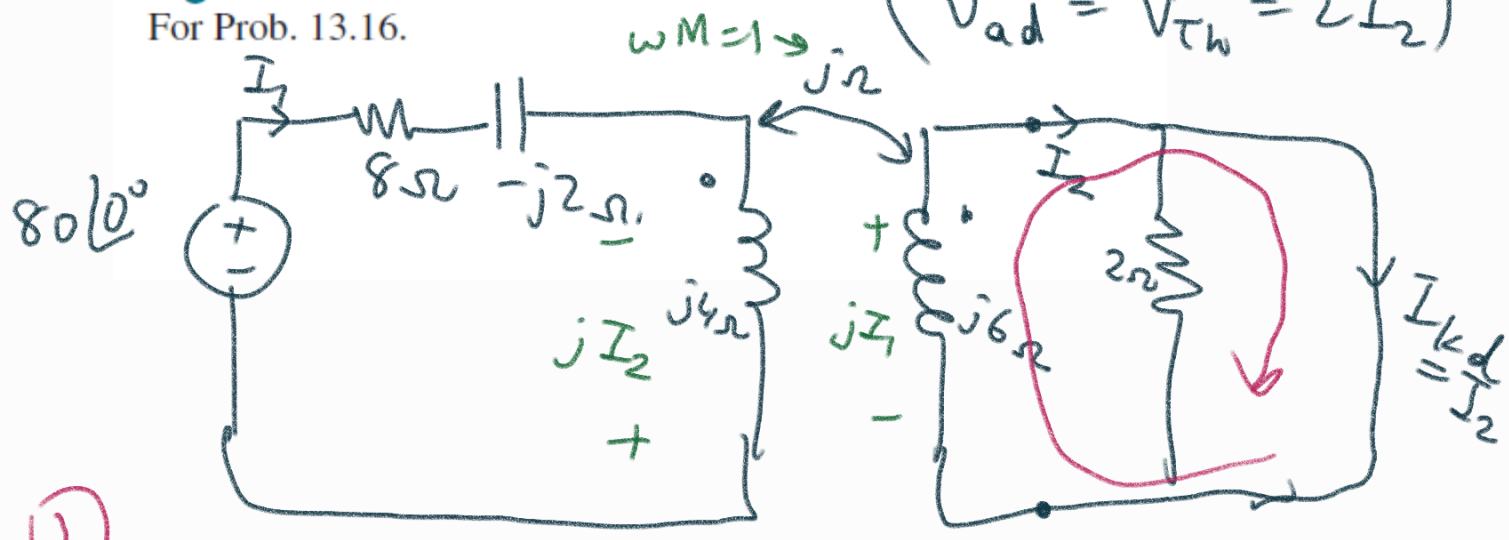

(1) $-80 + (8 - j2)I_1 + j4I_1 - jI_2 = 0$

(2) $j6I_2 - jI_1 = 0 \Rightarrow \boxed{I_1 = 6I_2}$

(1) $80 = (8 - j2) \times 6\, I_2 + j24\, I_2 - jI_2 = 0$

$80 = (48 + j11)I_2$

$$\boxed{I_2 = \frac{80}{48 + j11} = I_{Norton}} = \frac{80\angle 0°}{49.2\angle 12.9°}$$

$= 1.63\angle -12.9°$ A

Z_{Th}: yansıyan empedans ile yapalım

$$Z_1 = 8 - j2 + j4 = 8 + j2$$

$$Z_r = \frac{(\omega M)^2}{8+j2} = \frac{1}{8+j2}$$

$$Z_{Th} = \left(\frac{1}{8+j2} + j6\right) // 2$$

$$= \left(\frac{1 + j48 - 12}{8+j2}\right) // 2 = \frac{-11+j48}{8+j2} // 2$$

$$= \frac{49.2 \angle 180^\circ - 77.1^\circ}{8.2 \angle 14.0^\circ} // 2$$

$$= 6 \angle 88.9^\circ // 2$$

$$Z_{Th} = \frac{6\angle 88.9^\circ \times 2}{6\angle 88.9 + 2}$$

13.24 In the circuit of Fig. 13.93,

ML

(a) find the coupling coefficient, k

(b) calculate v_o.

(c) determine the energy stored in the coupled inductors at $t = 2$ s.

$\omega = 4$

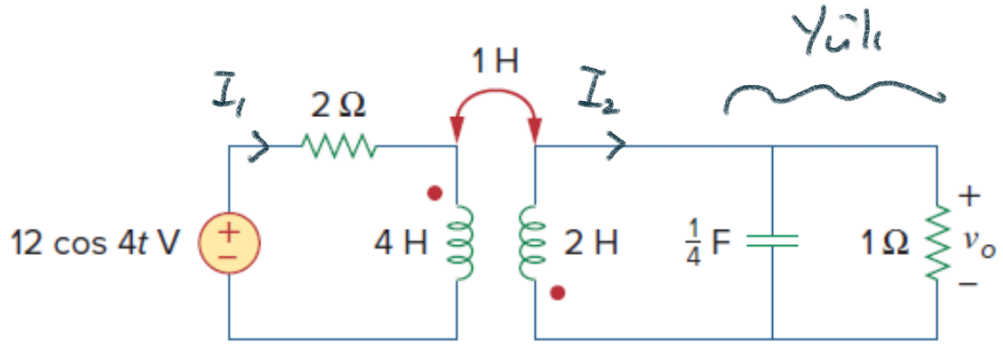

$$\frac{1}{j\frac{1}{4}4} = -j$$

Figure 13.93
For Prob. 13.24.

a) $M = k\sqrt{L_1 L_2}$

$$\frac{1}{I_1} = k\sqrt{4 \times 2} \Rightarrow k = \frac{1}{2\sqrt{2}} = 0.35$$

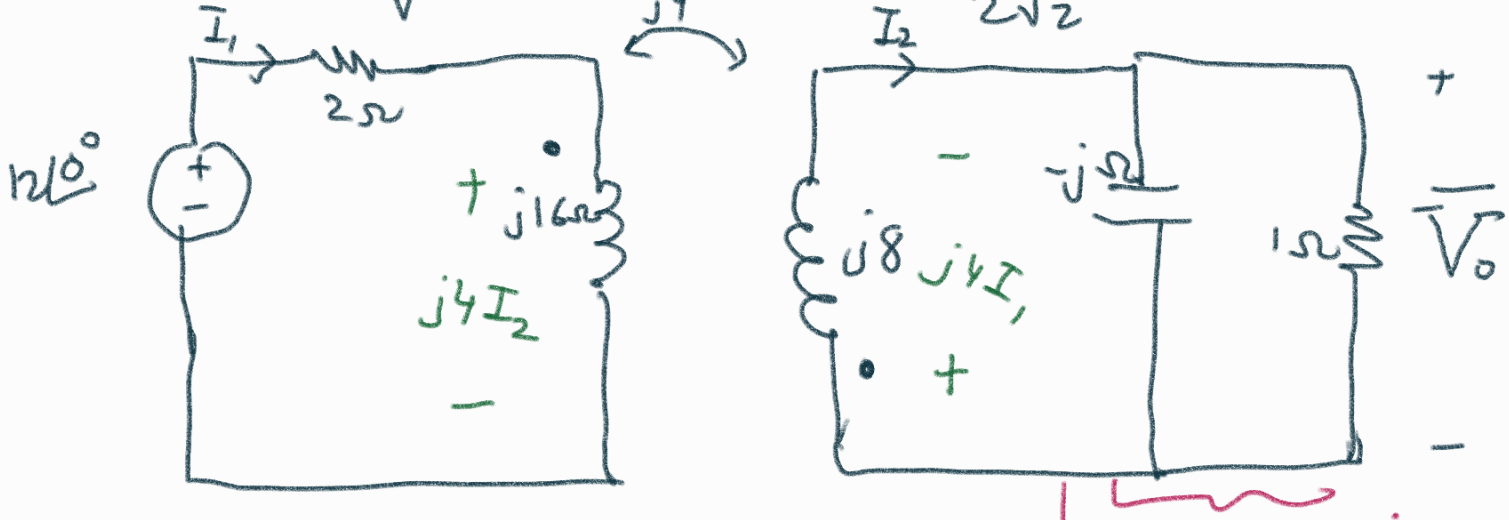

$$-j \,||\, 1 = \frac{-j}{1-j} = \frac{-j(1+j)}{2} = \frac{1-j}{2}$$

(1) $-12 + 2I_1 + j16 I_1 + j4 I_2 = 0$

(2) $j8 I_2 + \frac{1-j}{2} I_2 + j4 I_1 = 0$

(2) $\frac{1+j15}{2} I_2 = -j4 I_1$

$$\boxed{I_1 = \frac{1+j15}{-j8} I_2}$$

(1) $12 = (2+j16) I_1 + j4 I_2$

$$12 = \left[(2+j16)\frac{(1+j15)}{-j8} + j4\right] I_2$$

$$12 = \frac{2 + j30 + j16 - 240 + 32}{-j8} I_2$$

$$12 = \frac{-206 + j46}{-j8} I_2 \Rightarrow I_2 = \frac{-j96}{-206 + j46} = \frac{96\angle -90^\circ}{211\angle 167.4^\circ} = 0.45\angle -257.4$$

$$\overline{V_o} = I_2\left(\frac{1-j}{2}\right) = \frac{-j96(1-j)}{2(-206+j46)}$$

$$= \frac{-96-j96}{2(-206+j46)} = \frac{-48-j48}{-206+j46}$$

$$\overline{V_o} = \frac{-24+j24}{-103+j23} \text{ V}$$

$$\overline{V_o} = \frac{24\sqrt{2}\angle 135^\circ}{105.5\angle 180^\circ - 12.6^\circ}$$

$$= 0.32\angle -32.4^\circ \text{ V}$$

$$v_o(t) = 0.32\cos(4t - 32.4^\circ) \text{ V}$$

$$i_2(t) = 0.45\cos(4t - 257.4^\circ) \text{ A}$$

$$\boxed{E = +M\, i_1(2)\, i_2(2) + \frac{1}{2} L_1\, i_1(2)^2 + \frac{1}{2} L_2\, i_2(2)^2}$$

$M = 1$ H

$L_1 = 4$ H

$L_2 = 2$ H

$t = 2$s

rad

$$i_2(2) = 0.45\cos\left(8 - \frac{257.4\,\pi}{180}\right)$$

$$i_2(2) = 0.45\cos\left(\frac{8\times 180^\circ}{\pi} - 257.4^\circ\right)$$

derece

aynı şekilde $\overline{I}_1$ ve $i_1(t)$ ve $i_1(2)$ de bulunur.

***13.28** In the circuit of Fig. 13.97, find the value of X that will give maximum power transfer to the 20-Ω load.

ML

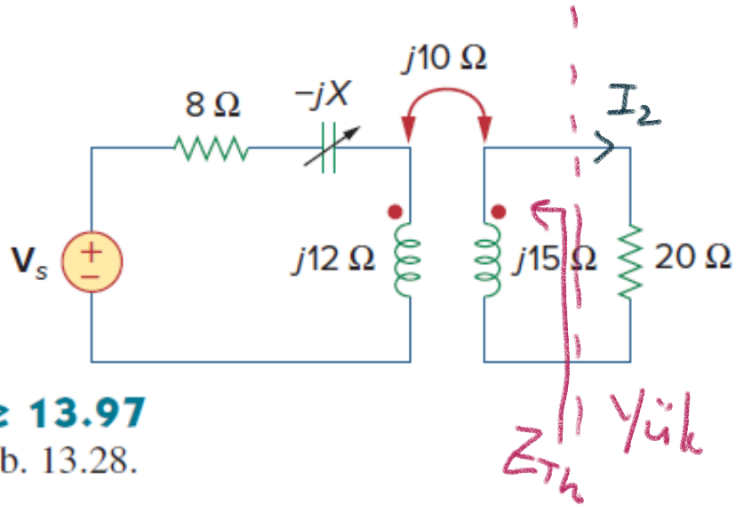

Figure 13.97
For Prob. 13.28.

$$P_{20} = \underbrace{|I_2|^2}_{max} 20$$

Problem:

$$\max\{|I_2|^2\}$$

$$\bar{Z}_{Th} = \frac{10^2}{8-jX+j12} + j15 =$$

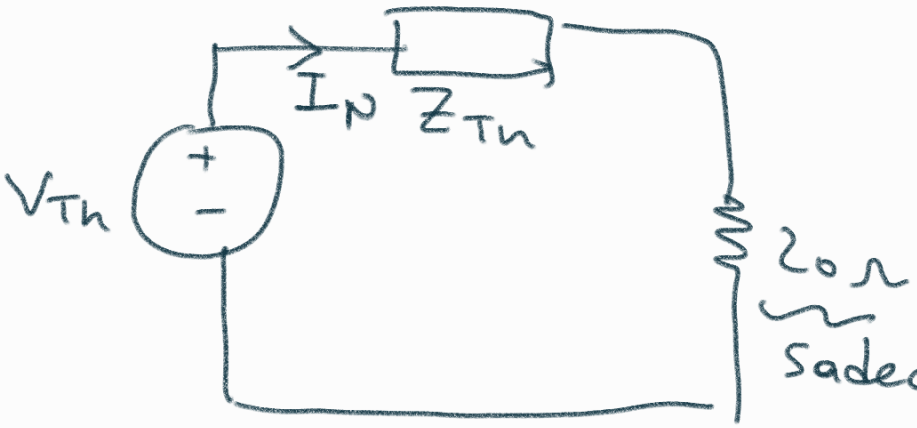

Sadece direnç var

o zaman $20 = |Z_{Th}|$ olmalı

$$\left| \frac{100}{8-jX+j12} + j15 \right| = 20$$

$$\left| \frac{100 + j120 + 15X - 180}{8-jX+j12} \right| = 20$$

$$\frac{(15x-80)^2 + 120^2}{64 + (12-x)^2} = 400$$

$$\frac{225x^2 - 2400x + 6400 + 14400}{64 + 144 - 24x + x^2} = 400$$

$$\cancel{225x^2} \cancel{-2400x} + 6400 + 14400 = 25600 + 57600 \cancel{-9600x} \cancel{+400x^2}$$

$$0 = 175x^2 - 7200x + \underbrace{83200 - 20800}_{62600}$$

$$x_{1,2} = \frac{7200 \mp \sqrt{7200^2 - 4 \times 175 \times 62600}}{350}$$

$$= \frac{7200 \mp 2832}{350} = (12.5,\ 28.7)$$

[$-j12.5\,\Omega$ veya $-j28.7\,\Omega$ olmalı.]

13.33 Determine the input impedance of the air-core transformer circuit of Fig. 13.102.

ML

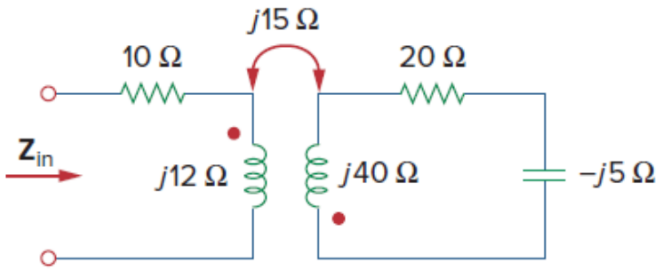

Figure 13.102
For Prob. 13.33.