9.8 Calculate these complex numbers and express your results in rectangular form:

(a) $\dfrac{60\angle 45^\circ}{7.5 - j10} + j2$

(b) $\dfrac{32\angle -20^\circ}{(6 - j8)(4 + j2)} + \dfrac{20}{-10 + j24}$

(c) $20 + (16\angle -50^\circ)(5 + j12)$

$7.5 - j10 = 12.5\angle -\tan^{-1}\left(\frac{10}{7.5}\right)$

$= 12.5\angle -53^\circ$

a) $\dfrac{60\angle 45^\circ}{12.5\angle -53^\circ} + j2 = \dfrac{60}{12.5}\angle 98^\circ + j2$

4.8

$-0.67 + j4.75 + j2$

$= -0.67 + j6.75$

b) $\dfrac{32\angle -20^\circ}{24 + j12 - j32 + 16} + \dfrac{20}{-2(5 - j12)}$

$\dfrac{32\angle -20^\circ}{40 - j20} - \dfrac{4}{5 - j12}$

$\dfrac{1.6\angle -20^\circ (2+j)}{(2-j)(2+j)} - \dfrac{4}{(5-j12)}\dfrac{(5+j12)}{(5+j12}$

$1.6\angle -20^\circ \; 2.24\angle 26.6^\circ - \dfrac{4}{169}(5 + j12)$

$3.58\angle -6.6^\circ - 0.12 - j0.28$

$3.56 - j0.41 - 0.12 - j0.28$

$3.44 - j0.69$

9.9 Evaluate the following complex numbers and leave your results in polar form:

(a) $5\angle 30^\circ \left(6 - j8 + \dfrac{3\angle 60^\circ}{2 + j}\right)$

(b) $\dfrac{(10\angle 60^\circ)(35\angle -50^\circ)}{(2 + j6) - (5 + j)}$

a) $5\angle 30^\circ \left(6 - j8 + \dfrac{3\angle 60^\circ}{2.24\angle 26^\circ} \right)$

$5\angle 30^\circ \left(6 - j8 + \underbrace{1.34\angle 34^\circ}_{1.11 + j0.75} \right)$

$= 5\angle 30^\circ \left(7.11 - j7.25 \right)$

$= 10.15\angle -45.5$

9.12 Let $\mathbf{X} = 4\angle 40^\circ$ and $\mathbf{Y} = 20\angle -30^\circ$. Evaluate the following quantities and express your results in polar form:

(a) $(\mathbf{X} + \mathbf{Y})\mathbf{X}^*$

(b) $(\mathbf{X} - \mathbf{Y})^*$

(c) $(\mathbf{X} + \mathbf{Y})/\mathbf{X}$

a) $\left(4\angle 40^\circ + 20\angle -30^\circ \right) 4\angle -40^\circ$

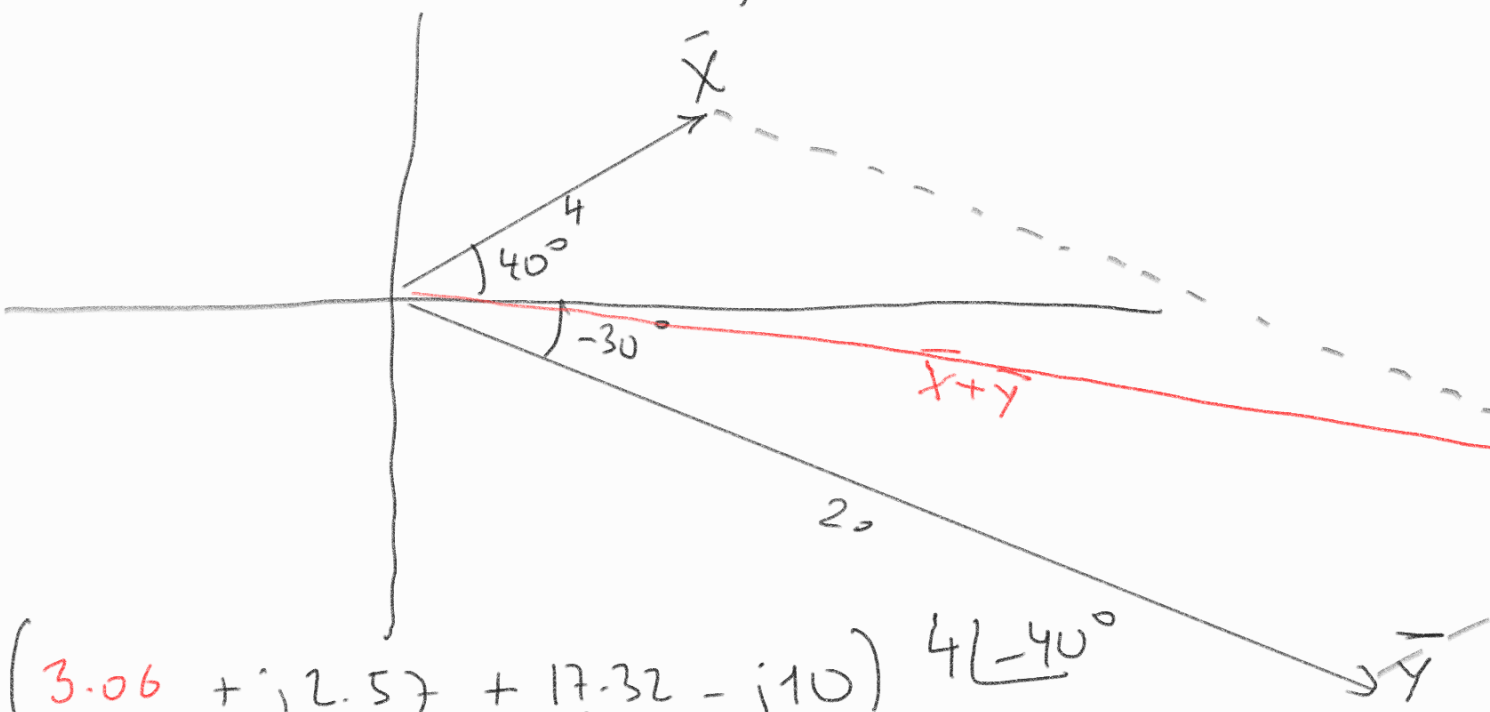

$\left(3.06 + j2.57 + 17.32 - j10 \right) 4\angle -40^\circ$

$\underbrace{\left(20.38 - j7.43 \right)}\, 4\angle -40^\circ$

$$= 21.69 \angle -20^\circ \quad 4 \angle -40^\circ$$

$$= 86.76 \angle -60^\circ$$

9.) $v(t) = 50 \cos(30t + 10^\circ)$ V

$$10^\circ = \frac{10}{180}\pi = \frac{\pi}{18}$$

- Genlik = 50 V
- açısal frekans = 30 rad/sn
- frekans $= \frac{\omega}{2\pi} = \frac{30}{2\pi} = 4.78$ Hz $= f$

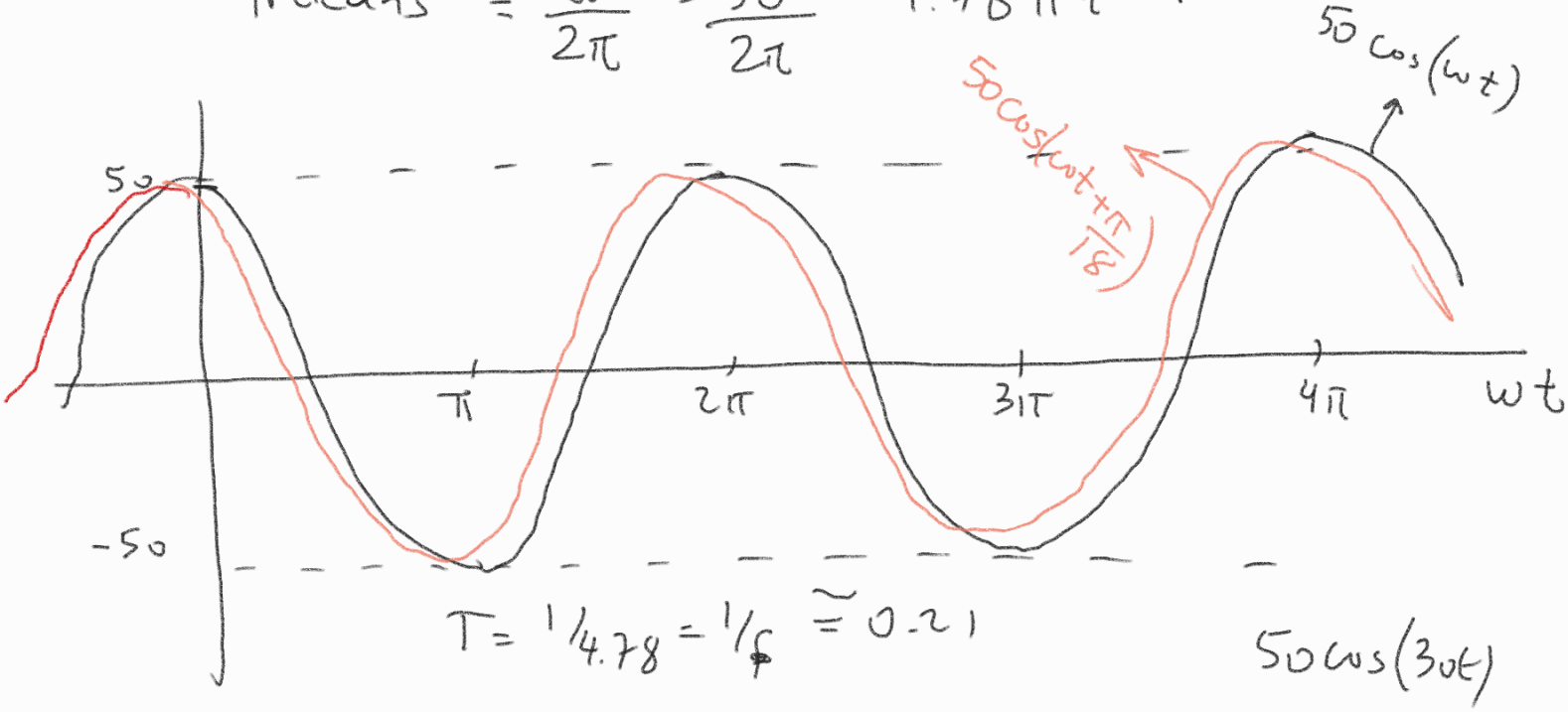

$$T = 1/4.78 = 1/f \simeq 0.21$$

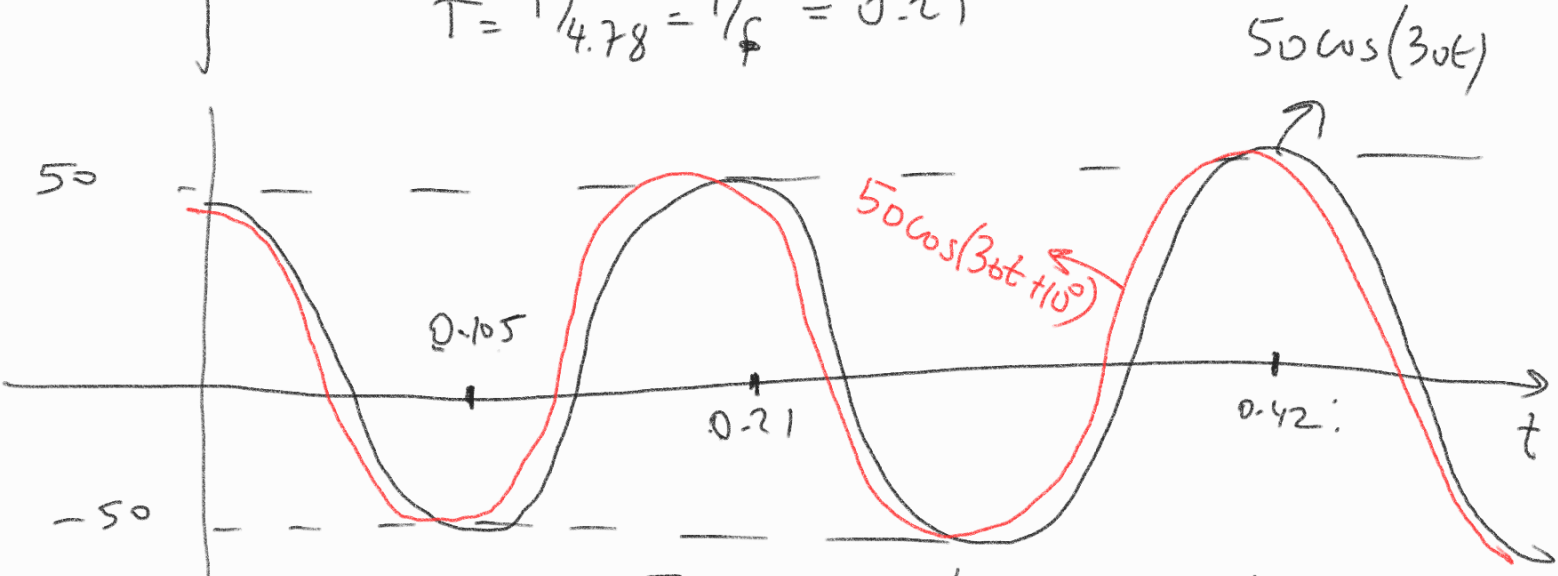

$$10^\circ \Rightarrow \frac{T}{36} \simeq 0.006 \text{ msn}$$

geriden geliyor (sola kayma)

9.3

a) $10\sin(\omega t + 30^\circ) = 10\cos(\omega t - 60^\circ)$

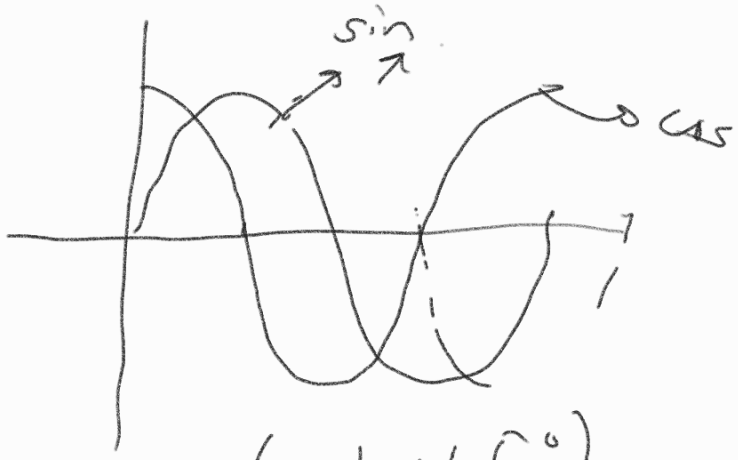

b) $-20\sin(\omega t + 45^\circ)$

$= -20\cos(\omega t - 45^\circ)$

c) $-9\sin(8t) = -9\cos(8t - 90^\circ)$

$\cos(\omega t) = \sin(\omega t + 90^\circ)$

$\sin(\omega t) = \cos(\omega t - 90^\circ)$

9.5

$v_1 = 45\sin(\omega t + 30^\circ)$

$\boxed{v_2 = 50\cos(\omega t - 30^\circ)}$

$60^\circ = \frac{T}{6}$

$\boxed{v_1 = 45\cos(\omega t - 60^\circ)}$

v_2, v_1'den 30° ileride

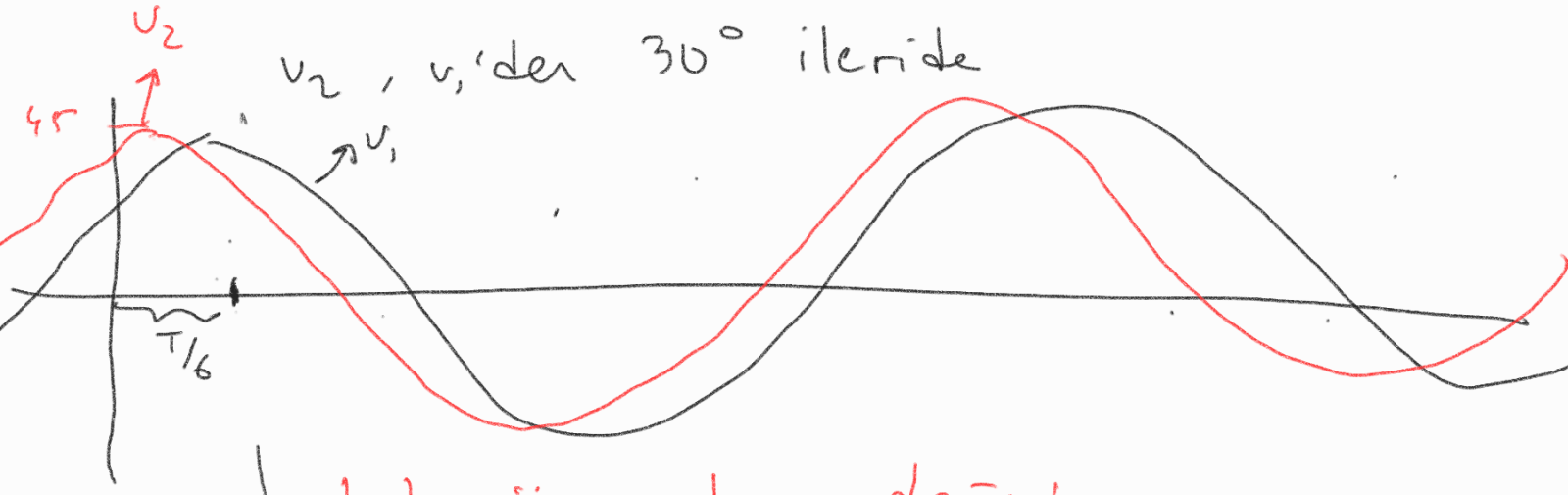

v_2 daha önce tepe değerine ulaşıyor. O nedenle daha ileride.

13.6 c) $x(t) = 13\cos(2t) + 5\sin(2t)$

$y(t) = 15\cos(2t - 11.8^\circ)$

$\cos(a+b) = ?$ $\cos a \cos b - \sin a \sin b$

$\cos(a-b) =$ $\cos a \cos b + \sin a \sin b$

$\sqrt{169+25} = \sqrt{191} \simeq 13.82$

$$x(t) = 13.82 \times \left[\underbrace{\frac{13}{13.82}}_{\cos\theta} \cos(2t) + \underbrace{\frac{5}{13.8}}_{\sin\theta} \sin(2t) \right]$$

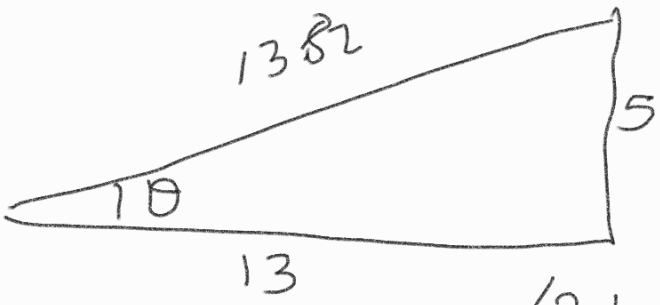

$\theta \simeq 21.04$

$x(t) = 13.82\cos(2t - 21.04^\circ)$

$y(t) = 15\cos(2t - 11.8^\circ) \rightarrow$ daha ilerde

* sizersem, $x(t)$, $y(t)$'ye göre sağda

$y(t)$ solda

$y(t)$ ilerde.

9.11 a) $v(t) = 21\cos(4t - 15^\circ)$

$\bar{V} = 21 \angle -15^\circ$

b) $i(t) = -8\sin(10t + 70^\circ)$ mA

$= -8\cos(10t - 20^\circ)$ mA

$\bar{I} = -8 \angle -20^\circ$ mA

$= 8 \angle 160^\circ$ mA

9.16 Transform the following sinusoids to phasors:

(a) $-20\cos(4t + 135°)$ (b) $8\sin(20t + 30°)$

(c) $20\cos(2t) + 15\sin(2t)$

12a, 17, 18a, 19a, 20, 22, 24a, 26, 27

30, 34, 39, 42, 43, 51, 55, 61, 62, 66, 72

80, 91, 93

9.18 Obtain the sinusoids corresponding to each of the following phasors:

(a) $\mathbf{V}_1 = 60\angle 15°$ V, $\omega = 1$ $v_1 = 60\cos(t + 15°)$ V

(b) $\mathbf{V}_2 = 6 + j8$ V, $\omega = 40$ $v_2 = 10\cos(40t + 53°)$ V

(c) $\mathbf{I}_1 = 2.8e^{-j\pi/3}$ A, $\omega = 377$ $i_1 = 2.8\cos(377t - 60°)$ A

(d) $\mathbf{I}_2 = -0.5 - j1.2$ A, $\omega = 10^3$ $i_2 = -1.3\cos(1000t + 67.4°)$ A

$= 1.3\cos(1000t - 112.6°)$ A

9.17 Two voltages v_1 and v_2 appear in series so that their sum is $v = v_1 + v_2$. If $v_1 = 10\cos(50t - \pi/3)$ V and $v_2 = 12\cos(50t + 30°)$ V, find v.

$\bar{V}_1 = 10\angle -60°$ V $\bar{V}_2 = 12\angle 30°$ V

$\bar{V} = \bar{V}_1 + \bar{V}_2 = 10\cos(-60) + j\,10\sin(-60)$

$+ 12\cos(30) + j\,12\sin(30°)$

$\underbrace{(5 + 6\sqrt{3})}_{15.4} + j\underbrace{(-5\sqrt{3} + 6)}_{-j2.66} = \bar{V}$

$\bar{V} = 15.6\angle -9.8 \xrightarrow{\mathcal{F}^{-1}} v(t) = 15.6\cos(50t - 9.8°)$

9.39 For the circuit shown in Fig. 9.46, find Z_{eq} and use that to find current **I**. Let $\omega = 10$ rad/s.

(bu sorudan devre fazör alanında verilmiş

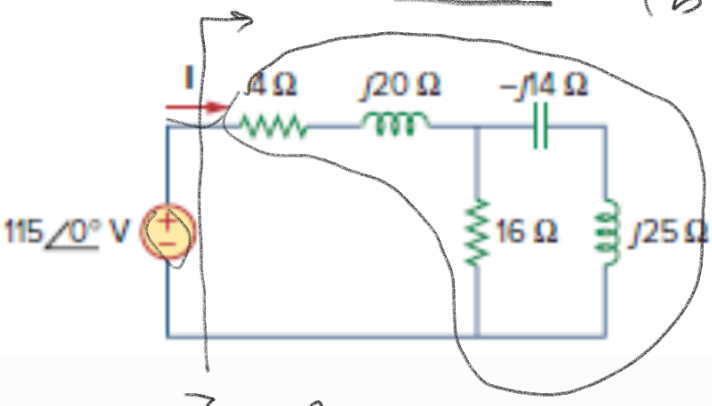

$Z_{eq} = ?$

$$Z_{eq} = 4 + j20 + (16 \,//\, j11)$$

$$= 4 + j20 + \frac{j176}{16 + j11}$$

$$= \frac{64 + j44 + j320 - 220 + j176}{16 + j11}$$

$$I_{eq} = \frac{-156 + j540}{16 + j11} = \frac{562 \angle 180 - 73.9^\circ}{19.4 \angle 34.5^\circ}$$

$256 + 121$

377

$$= 29.0 \angle 71.6$$

$$I = \frac{115 \angle 0^\circ}{29 \angle 71.6^\circ} = 3.97 \angle -71.6^\circ$$

$$i(t) = 3.97 \cos(10t - 71.6^\circ) \text{ A}$$

9.42 Calculate $v_o(t)$ in the circuit of Fig. 9.49.

$\omega = 200$

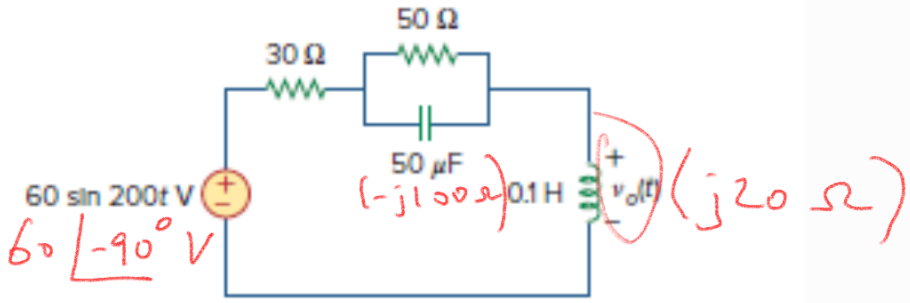

$$\frac{1}{j50\times10^{-6}\times 200}$$

$$\frac{100}{j}$$

$$-j100$$

Figure 9.49
For Prob. 9.42.

9.51 If the voltage v_o across the 2-Ω resistor in the circuit of Fig. 9.58 is 90 cos 2t V, obtain i_s.

$-j5\,\Omega$ $\quad j1\,\Omega$ $\quad \omega = 2$

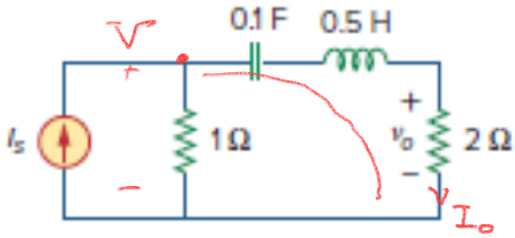

$\bar{V}_o = 90$ V

$\bar{I}_o = 45\angle 0^\circ$ A

Figure 9.58
For Prob. 9.51.

$$\bar{V} = 45\angle 0^\circ\,(2-j4)$$

$$\bar{I}_{1\Omega} = \frac{\bar{V}}{1\,\Omega} = 45\angle 0^\circ\,(2-j4)$$

$$\bar{I}_s = 45(2-j4) + 45$$

$$= 90 - j180 + 45$$

$$= 135 - j180 = 225\angle -53^\circ \text{ A}$$

$$i_s = 225\cos(2t - 53^\circ) \text{ A}$$

9.43 Find current $\mathbf{I}_o$ in the circuit shown in Fig. 9.50.

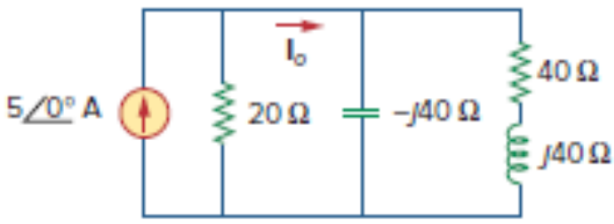

Figure 9.50
For Prob. 9.43.

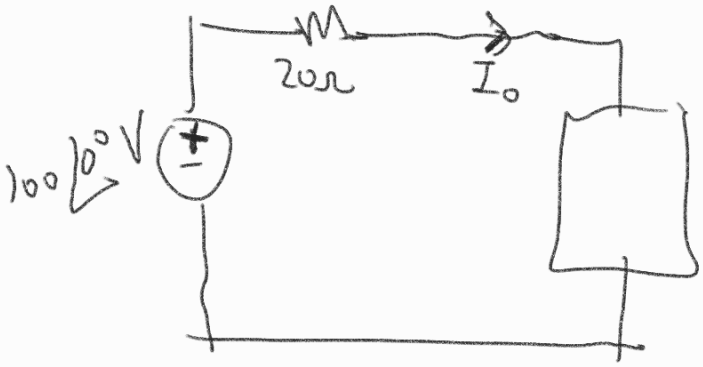

$$-j40 \,//\, (40+j40)$$

$$\frac{-j40(40+j40)}{\cancel{-j40+40+j40}}$$

$$= +40-j40$$

$$I_o = \frac{100\angle 0^\circ}{20+40-j40} = \frac{100\angle 0^\circ}{60-j40} = \frac{10}{\sqrt{52}\,\angle -\tan^{-1}\left(\frac{4}{6}\right)}$$

$$I_o = 13.9\angle +33.7^\circ \text{ A}$$

9.55 Find **Z** in the network of Fig. 9.62, given that $\mathbf{V}_o = 4\angle 0^\circ$ V.

ML

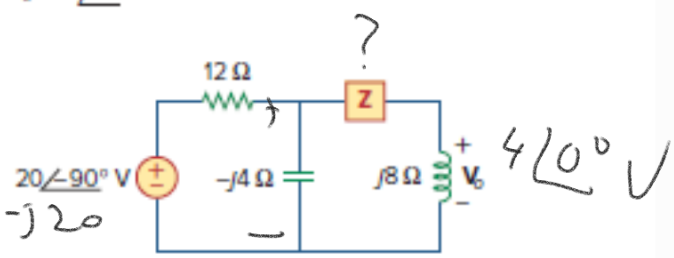

Figure 9.62
For Prob. 9.55.

$$\frac{-j20\left(-j4 \,//\, (Z+j8)\right)}{12+\left(-j4 \,//\, (Z+j8)\right)} \times \frac{j8}{Z+j8} = 4\angle 0^\circ$$

$$\frac{j20\,\dfrac{\left(-j4(Z+j8)\right)}{-j4+Z+j8}}{12+\dfrac{\left(-j4(Z+j8)\right)}{-j4+Z+j8}} \times \frac{j8}{Z+j8} = 4$$

$$\frac{j20\,\dfrac{(-j4)(Z+j8)}{Z+j4}}{12+\dfrac{-j4(Z+j8)}{Z+j4}} \times \frac{j8}{Z+j8} = 4$$

$$\frac{80\cancel{(Z+j8)}}{12Z+j48-j4Z+32} \times \frac{j8}{\cancel{Z+j8}} = 4$$

$$\frac{j640}{4} = (12-j4)Z + 32 + j48$$

$$\frac{j160-32-j48}{12-j4} = Z$$

$$\boxed{\frac{-32+j112}{12-j4} = Z}$$

9.61 Find $\mathbf{Z}_{eq}$ in the circuit of Fig. 9.68.

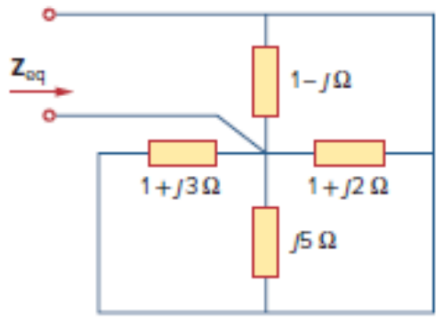

Figure 9.68
For Prob. 9.61.

$$Z_{eq} = (1-j)\,//\,(1+j2)\,//\,j5\,//\,(1+j3)$$

$$= \left(\frac{1}{1-j} + \frac{1}{1+j2} + \frac{1}{j5} + \frac{1}{1+j3}\right)^{-1}$$

$$= \left(\frac{1+j}{2} + \frac{1-j2}{5} - \frac{j}{5} + \frac{1-j3}{10}\right)^{-1}$$

$$= \left[\frac{5+j5+2-j4-j2+1-j3}{10}\right]^{-1}$$

$$= \left(\frac{8-j4}{10}\right)^{-1} = \frac{10}{8-j4} = \frac{10\angle 0^\circ}{4\sqrt{5}\angle -26^\circ} = \frac{10}{4\sqrt{5}}\angle 26^\circ\ \Omega$$

9.91 Figure 9.91 shows a series combination of an inductance and a resistance. If it is desired to connect a capacitor in parallel with the series combination such that the net impedance is resistive at 10 kHz, what is the required value of C?

10krad/s

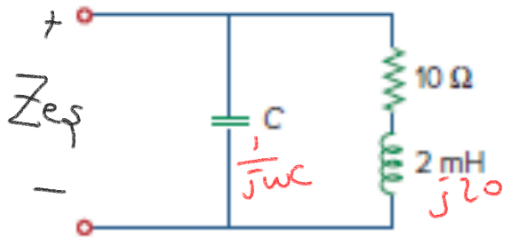

Figure 9.91
For Prob. 9.91.

Z_{eq} resistive $\equiv Z_{eq} \in \mathbb{R}$

$Im(Z_{eq}) = 0$

$$Z_{eq} = \frac{\frac{1}{j\omega C}(10+j20)}{\frac{1}{j\omega C} + 10 + j20} = \frac{10+j20}{1+j10^5C - 2\times10^5C}$$

$$= \frac{(10+j20)(1-2\times10^5C - j10^5C)}{(1-2\times10^5C)^2 + (10^5C)^2}$$

$$\frac{-10 - 2\times10^6C - j10^6C + j20 - j4\times10^6C + 2\times10^6C}{\text{Payda}}$$

$$-10^6C + 20 - 4\times10^6C = 0$$

$$20 = 5\times10^6C \Rightarrow C = \frac{20}{5\times10^6} = 4\,\mu F$$

9.62 For the circuit in Fig. 9.69, find the input impedance $\mathbf{Z}_{in}$ at 10 krad/s.

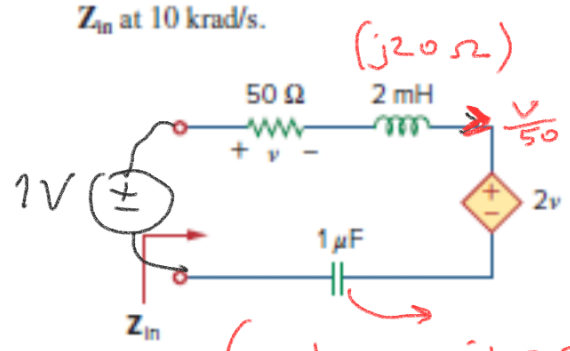

Figure 9.69
For Prob. 9.62.

$$\left(\frac{1}{j10^{-6}\times10^4} = -j100\,\Omega\right)$$

$$1 = v + j20\times\frac{v}{50} + 2v - j100\times\frac{v}{50}$$

$$1 = v\left[1 + j0.4 + 2 - j2\right]$$

$$V = \frac{1}{3-j1.6} \text{ Volt}$$

$$Z_{in} = \frac{1\,V}{I_{in}} = \frac{1}{V/50} = \frac{50}{V} = 50(3-j1.6)$$
$$= 150 - j80\ \Omega$$

9.66 For the circuit in Fig. 9.73, calculate $\mathbf{Z}_T$ and $\mathbf{V}_{ab}$.

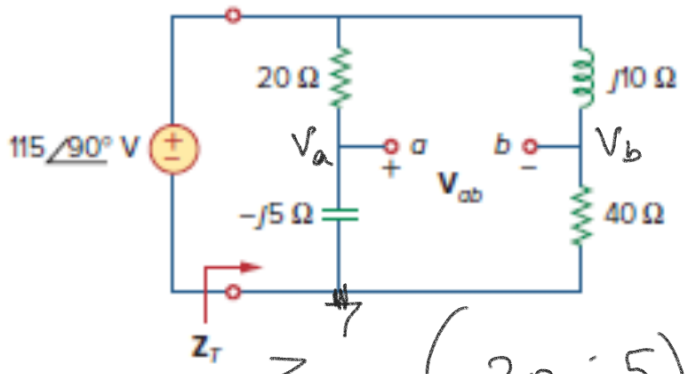

Figure 9.73
For Prob. 9.66.

$$Z_T = (20-j5) \,//\, (40+j10)$$
$$= \frac{(20-j5)(40+j10)}{60+j5} = \frac{(4-j)(40+j10)}{12+j1}$$

$$\bar{V}_{ab} = \bar{V}_a - \bar{V}_b$$
$$= 115\angle 90^\circ \left(\frac{-j5}{20-j5} - \frac{40}{40+j10} \right)$$
$$= 115\angle 90^\circ \frac{\cancel{-j200} + 50 - 800 + \cancel{j200}}{(20-j5)(40+j10)}$$
$$= 115\angle 90^\circ \frac{-750}{800 + \cancel{j200} - \cancel{j200} + 50} = \frac{j115 \times (-750)}{850}$$
$$= -j101.5\ V$$

9.72 Calculate the value of $\mathbf{Z}_{ab}$ in the network of Fig. 9.79.

ML

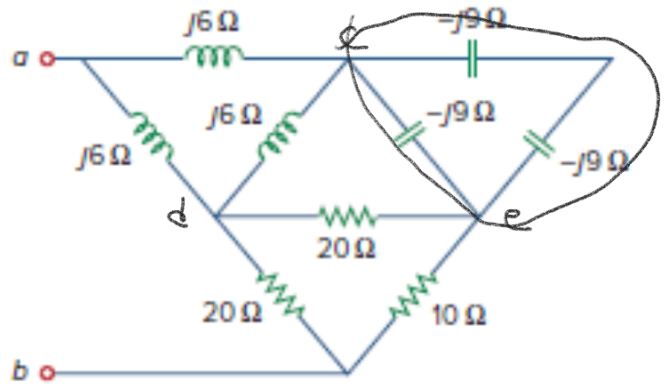

Figure 9.79
For Prob. 9.72.

$$-j9 \,//\, (-j18)$$

$$\frac{(-j9)\times(-j18)}{-j27} = -j6$$

$$\frac{j6 \times j6}{j18} = j2$$

$$\frac{20\times 20}{20+20+10} = 8$$

$$\frac{20\times 10}{50} = 4$$

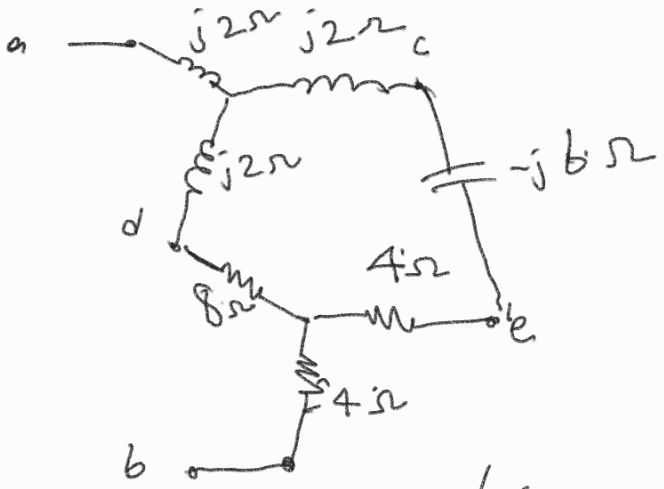

$$Z_{ab} = j2 + 4 + \left((j2+8) \,//\, (-j4+4)\right)$$

$$= 4 + j2 + \frac{(8+j2)(4-j4)}{12-j2}$$

$$= 4 + j2 + \frac{32 - j32 + j8 + 8}{12-j2} = 4 + j2 + \frac{40-j24}{12-j2}$$

$$= \frac{48 + \cancel{j24} - j8 + 4 + 40 - \cancel{j24}}{12-j2} = \frac{92-j8}{12-j2} = \frac{46-j4}{6-j}$$

$$\cong \frac{46.2\angle -5^\circ}{6.08\angle -9.5^\circ}$$

$$\cong 7.6\angle 4.5^\circ \ \Omega$$

9.80 Consider the phase-shifting circuit in Fig. 9.83. Let $\mathbf{V}_i = 120$ V operating at 60 Hz. Find:

(a) $\mathbf{V}_o$ when R is maximum
(b) $\mathbf{V}_o$ when R is minimum
(c) the value of R that will produce a phase shift of 45°

$f = 60\ Hz$

$\omega = 120\pi\ rad/sn$

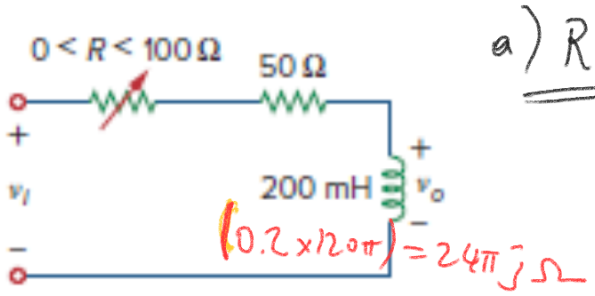

Figure 9.83

a) $R = 0$:

$$\bar{V}_o = \frac{j24\pi}{50 + j24\pi} \times 120$$

$$= \frac{j75 \times 120}{50 + j75}$$

$$= \frac{j360}{2+j3} = \frac{360 \angle 90^\circ}{\sqrt{13} \angle 56.3}$$

$$\bar{V}_o = \frac{360}{\sqrt{13}} \angle 33.7^\circ\ V$$

b) $R = 100$:

$$\bar{V}_o = 120 \times \frac{j75}{j75 + 150}$$

$$= 120 \times \frac{j}{2+j}$$

$$\bar{V}_o = \frac{120 \angle 90^\circ}{\sqrt{5} \angle 26^\circ} = \frac{120}{\sqrt{5}} \angle 64^\circ\ V$$

c) 45° için R?

$$120 \frac{j75}{R + 50 + j75} = \bar{V}_o \rightarrow \text{fazının } 45^\circ \text{ olması}$$

$j75 \rightarrow 90^\circ$

$R + 50 + j75 \rightarrow 45^\circ$ olmalı

Yani, $R + 50 = 75$ olmalı

$R = 25\ \Omega$ olmalıdır

9.93 A power transmission system is modeled as shown in Fig. 9.92. Given the source voltage and circuit elements

$\mathbf{V}_s = 115\angle 0^\circ$ V, source impedance

$\mathbf{Z}_s = (1 + j0.5)\ \Omega$, line impedance

$\mathbf{Z}_\ell = (0.4 + j0.3)\ \Omega$, and load impedance

$\mathbf{Z}_L = (23.2 + j18.9)\ \Omega$, find the load current $\mathbf{I}_L$.

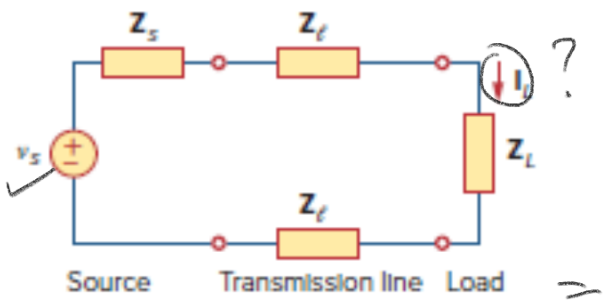

Figure 9.92
For Prob. 9.93.

$$\frac{115\angle 0^\circ}{Z_s + 2Z_\ell + Z_L}$$

$$\frac{115\angle 0^\circ}{1+j0.5+0.8+j0.6+23.2+j18.9}$$

$$= \frac{115\angle 0^\circ}{25+j20}$$

$$= \frac{23\angle 0^\circ}{5+j4} = \frac{23\angle 0^\circ}{\sqrt{41}\angle 39^\circ}$$

$$\bar{I}_L = 3.6\angle -39^\circ \text{ A}$$

Chapter 10: SINÜSOİDAL YATIŞKIN DURUM ANALİZİ

D.G.Y, G.A.Y, Süperpozisyon, Kaynak Dönüş...
Thevenin, Norton, OP-AMP, Bazı uygulamalar.

10.7 Use nodal analysis to find **V** in the circuit of Fig. 10.56. → D.G.Y.

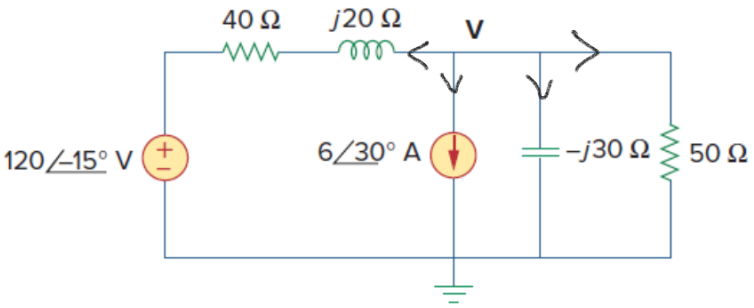

Figure 10.56
For Prob. 10.7.

$$\frac{V - 120\angle -15^\circ}{40+j20} + 6\angle 30^\circ + \frac{V}{-j30} + \frac{V}{50} = 0$$

$$V\left(\frac{1}{40+j20} + \frac{1}{-j30} + \frac{1}{50}\right) = \frac{6\angle -15^\circ}{2+j} - 6\angle 30^\circ$$

$$\frac{V}{10}\left(\frac{1}{4+j2} + \frac{3+j5}{15}\right) = \frac{6\angle -15^\circ}{\sqrt{5}\angle 26^\circ} - 6\angle 30^\circ$$

$$V\,\frac{15+12+j20+j6-10}{(4+j2)15} = \frac{6}{\sqrt{5}}\angle -41^\circ - 6\angle 30^\circ$$

10.10 Use nodal analysis to find v_o in the circuit of Fig. 10.59. Let $\omega = 2$ krad/s.

ML

$$\frac{1}{j2\times10^{-6}\times 2\times10^{3}} =$$

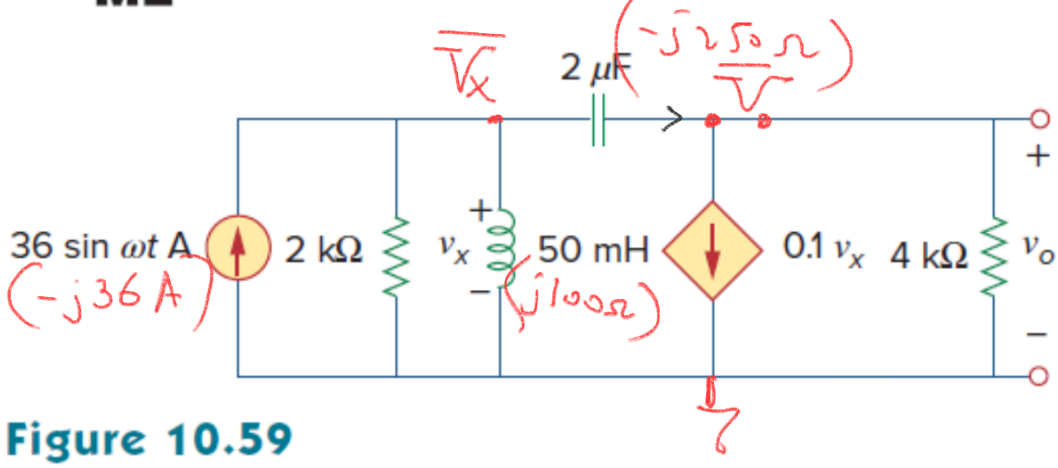

Figure 10.59
For Prob. 10.10.

$$-j36 = \frac{V_x}{2000} + \frac{V_x}{j100} + \frac{V_x - V_o}{-j250} \quad (1)$$

$$\frac{V_x - V_o}{-j250} = 0.1\,V_x + \frac{V_o}{4000} \quad (2)$$

$$(1)\quad -j36 = \frac{V_x}{2000} - \frac{jV_x}{2000} + \frac{j8V_x - j8V_o}{2000}$$

$$\boxed{-j72000 = V_x(1+j7) - j8V_o} \quad (1)$$

$$j16\,V_x - j16\,V_o = 400\,V_x + V_o$$

$$\boxed{(-400+j16)\,V_x = (1+j16)\,V_o} \quad (2) \qquad V_x = V_o\,\frac{1+j16}{-400+j16}$$

$$V_x \simeq \frac{j16}{-400}\,V_o$$

$$-j72000 = \left(\frac{j16\,(1+j7)}{-400} - j8 \right) V_o$$

$$-j72000 = \frac{\cancel{j16} - \cancel{112} + j3200}{-400} V_o$$

$$\frac{\cancel{j}72000 \times \cancel{400}}{\cancel{j}\cancel{3200}8} \cong V_o \qquad V_o \simeq 9000\,V$$

10.23 Using nodal analysis obtain **V** in the circuit of Fig. 10.72.

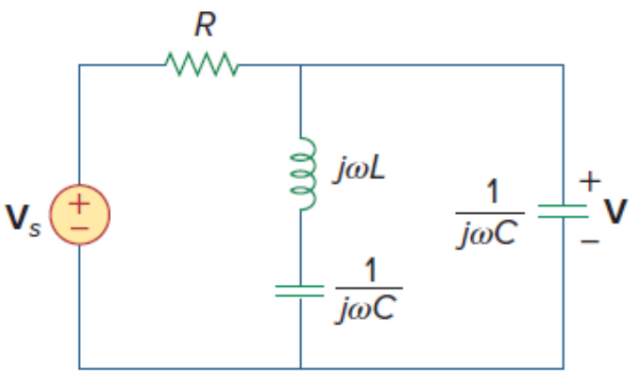

$$V = \frac{V_s}{a + bj}$$

a ?

b ?

Figure 10.72
For Prob. 10.23.

10.39 Find $\mathbf{I}_1$, $\mathbf{I}_2$, $\mathbf{I}_3$, and $\mathbf{I}_x$ in the circuit of Fig. 10.84.

ML

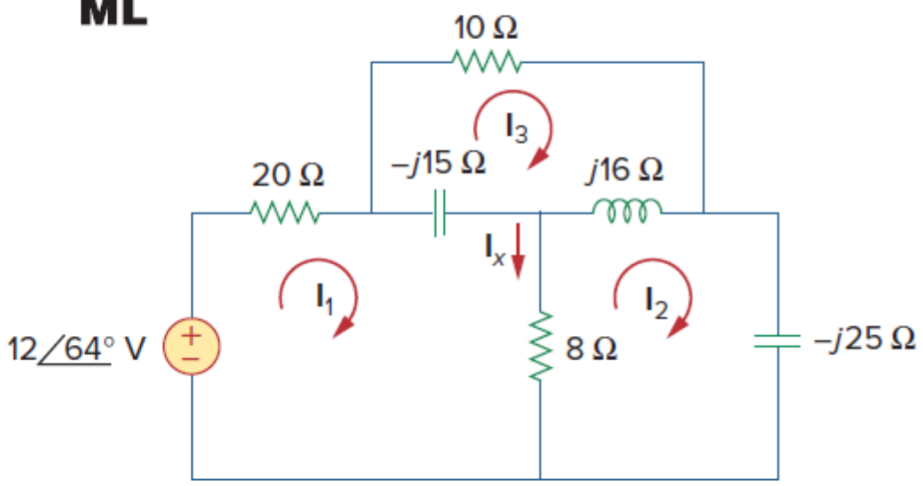

Figure 10.84
For Prob. 10.39.

(1) $-12\angle 64^\circ + 20 I_1 - j15(I_1 - I_3) + 8(I_1 - I_2) = 0$

(2) $8(I_2 - I_1) + j16(I_2 - I_3) - j25 I_2 = 0$

(3) $10 I_3 + j16(I_3 - I_2) - j15(I_3 - I_1) = 0$

$$\underbrace{\begin{bmatrix} 28-j15 & -8 & j15 \\ -8 & 8-j9 & -j16 \\ j15 & -j16 & 10+j \end{bmatrix}}_{\bar{A}} \underbrace{\begin{bmatrix} I_1 \\ I_2 \\ I_3 \end{bmatrix}}_{\bar{I}} = \underbrace{\begin{bmatrix} 12\angle 64^\circ \\ 0 \\ 0 \end{bmatrix}}_{\bar{b}}$$

$$\left.\begin{aligned} \bar{A} \times \bar{I} = \bar{b} \Rightarrow \bar{I} &= \text{inv}(\bar{A}) \times \bar{b} \\ \bar{I} &= \bar{A} \backslash \bar{b} \end{aligned}\right\} \text{Matlab}$$

10.40 Find i_o in the circuit shown in Fig. 10.85 using superposition.

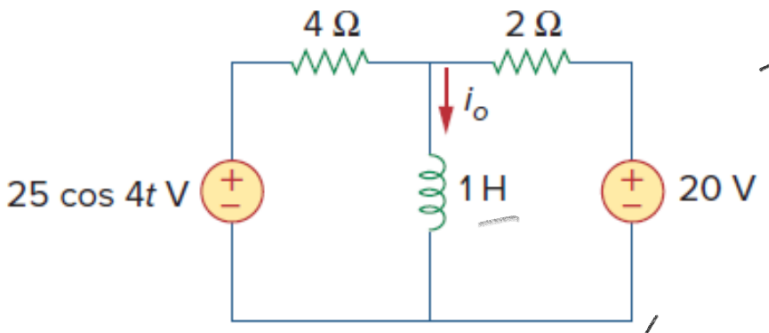

$i_o = i_o' + i_o''$

Figure 10.85
For Prob. 10.40.

i) i_o' ? (25cos4t is in)

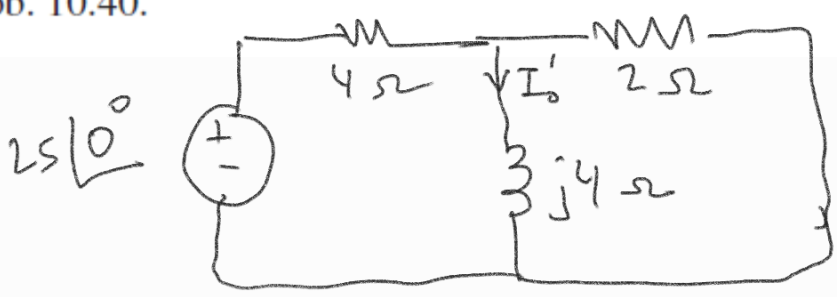

$$I_o' = \frac{25 \times (2 \| j4)}{4 + (2 \| j4)} \times \frac{2}{2+j4}$$

$$= \frac{25 \times \frac{j8}{2+j4}}{4 + \frac{j8}{2+j4}} \times \frac{2}{2+j4}$$

$$= \frac{j200}{8+j16+j8} \times \frac{2}{2+j4} = \frac{j200}{(8+j24)(1+j2)} = \frac{j25}{(1+j3)(1+j2)}$$

$$= \frac{j25}{1+j2+j3-6} = \frac{25\angle 90^\circ}{-5+j5} = \frac{25\angle 90^\circ}{5\sqrt{2}\angle 135^\circ}$$

$$I_o' = \frac{5}{\sqrt{2}}\angle -45^\circ$$

$$i_o'(t) = \frac{5}{\sqrt{2}}\cos(4t - 45^\circ)\ \text{A}$$

ii) i_o'' ? (20 V DC)

$\omega = 0$

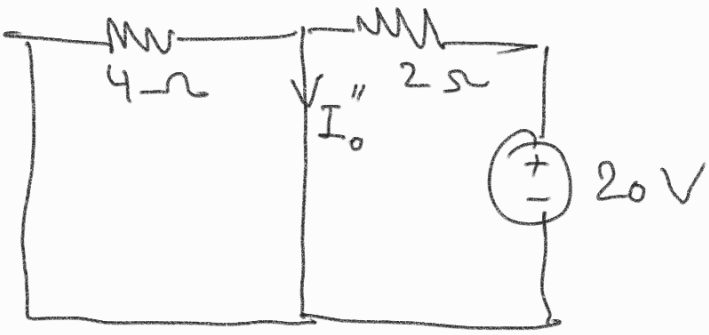

$$\Rightarrow I_o'' = \frac{20}{2} = 10\ \text{A}$$

DC

$$i_o''(t) = 10\ \text{A}$$

$$i_o(t) = 10 + \frac{5}{\sqrt{2}}\cos(4t - 45^\circ)\ \text{A}$$

10.48 Find i_o in the circuit of Fig. 10.93 using superposition.

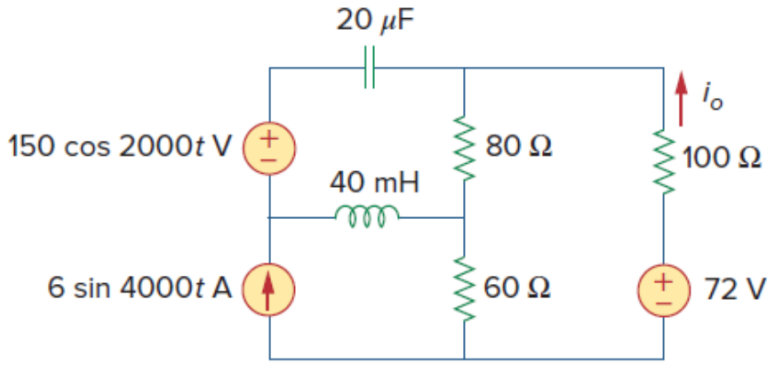

$$i_o = i_o' + i_o'' + i_o'''$$

Figure 10.93
For Prob. 10.48.

i) $150 \cos 2000t$ V is in $\quad \omega = 2000$ rad/sec

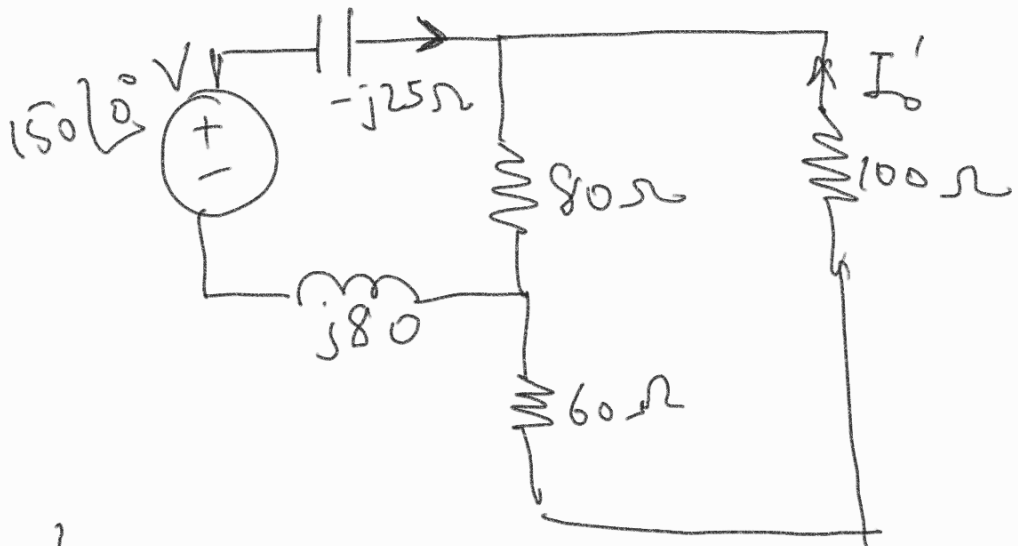

$$\frac{1}{j20\times10^{-6}\times 2\times10^{3}} = \frac{1000}{j40}$$

$$I_o' = \frac{150}{\frac{160}{3}+j55}\times\frac{-1}{3} = \frac{-50}{\frac{160}{3}+j55} = \frac{-10}{\frac{32}{3}+j11}$$

$$\simeq \frac{-10}{11\sqrt{2}\angle 45^\circ}$$

$$i_o'(t) = \frac{-10}{11\sqrt{2}}\cos(2000t-45^\circ)\ \text{A}$$

$$= \frac{10}{11\sqrt{2}}\cos(2000t+135^\circ)\ \text{A}$$

ii) $6\sin 4000t$ A is in

$\omega = 4000$ rad/sec

$$\frac{1}{j4\times10^{3}\times 20\times10^{-6}} = \frac{100}{8j}$$

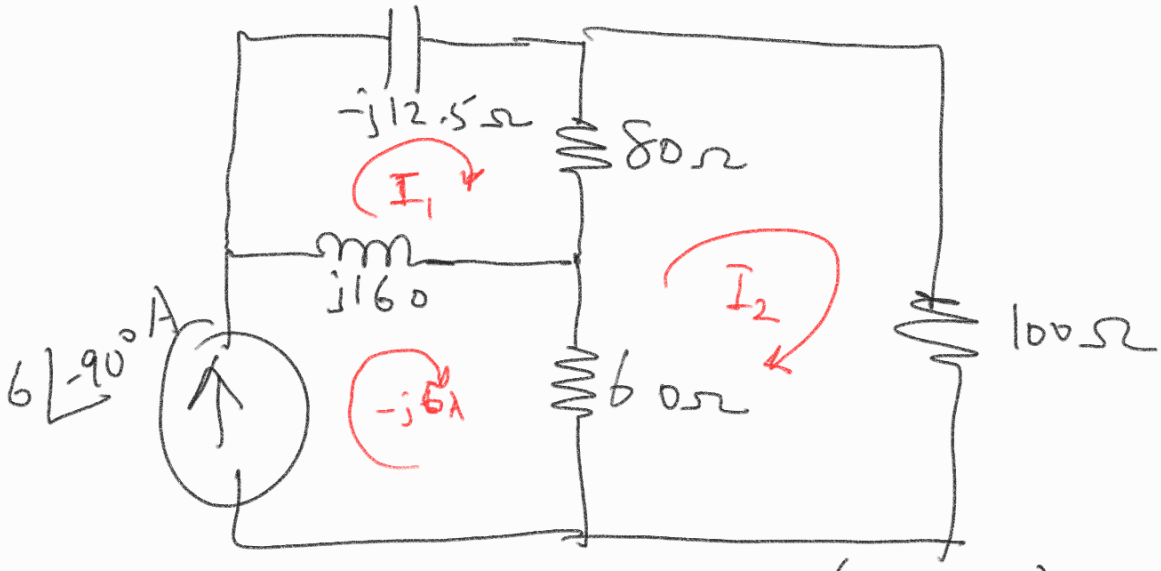

$$-j12.5\,I_1 + 80(I_1-I_2) + j160\,(I_1+j6) = 0 \quad (1)$$

$$80(I_2-I_1) + 100\,I_2 + 60\,(I_2+j6) = 0 \quad (2)$$

$$3 \times \left((80 + j147.5) I_1 - 80 I_2 = 960 \right)$$

$$+ \quad -80 I_1 + 240 I_2 = -j360$$

$$(160 + j442.5) I_1 = 2880 - j360$$

buradan I_1 ve I_2 bulunur.

$$i_o'' = -I_2$$

iii) 72V DC için

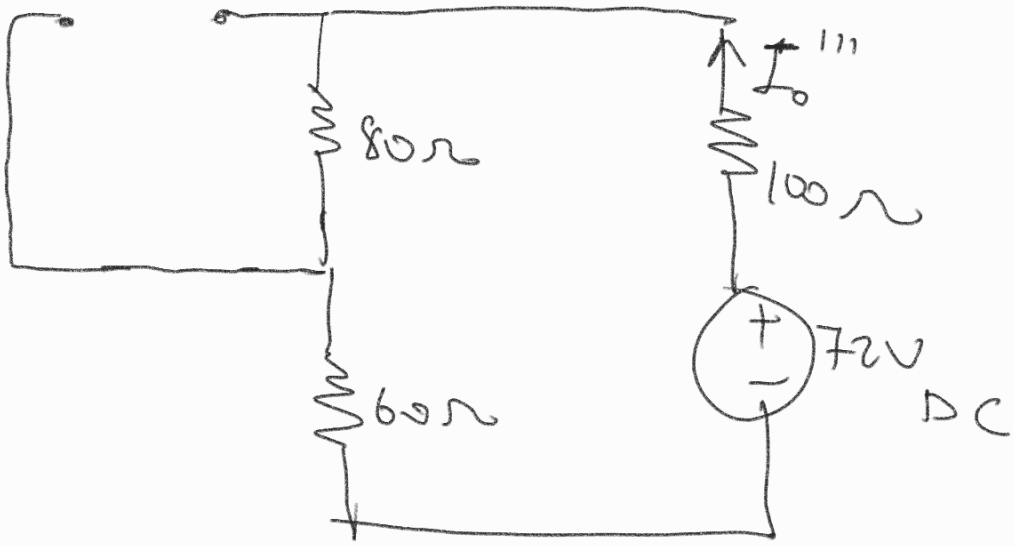

$$I_o''' = \frac{72}{740} = 0.3 \text{ A DC}$$

10.49 Using source transformation, find i in the circuit of Fig. 10.94.

$w = 20$ rad/sn

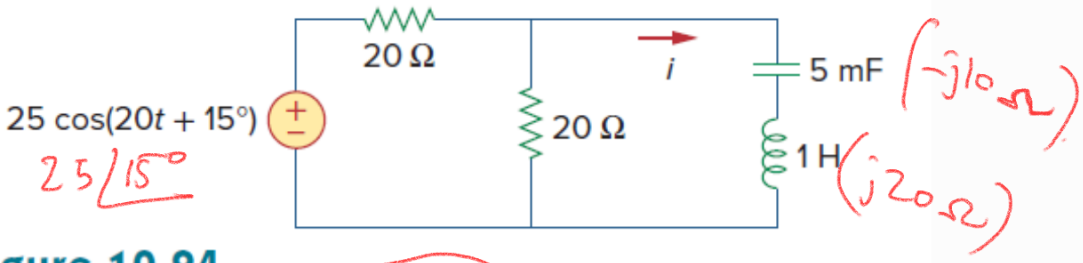

$$\frac{1}{j20 \times 5 \times 10^{-3}}$$

100

Figure 10.94
For Prob. 10.49.

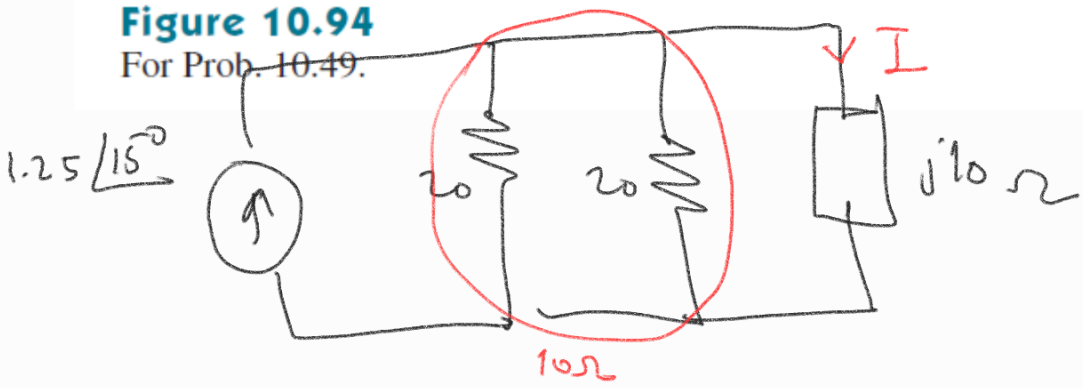

$$I = \frac{1.25\angle 15^\circ \times 10}{10 + j10} = \frac{1.25\angle 15^\circ}{\sqrt{2}\angle 45^\circ}$$

$$i(t) = \frac{1.25}{\sqrt{2}} \cos(20t - 30^\circ)\ A$$

10.58 For the circuit depicted in Fig. 10.101, find the Thevenin equivalent circuit at terminals *a*-*b*.

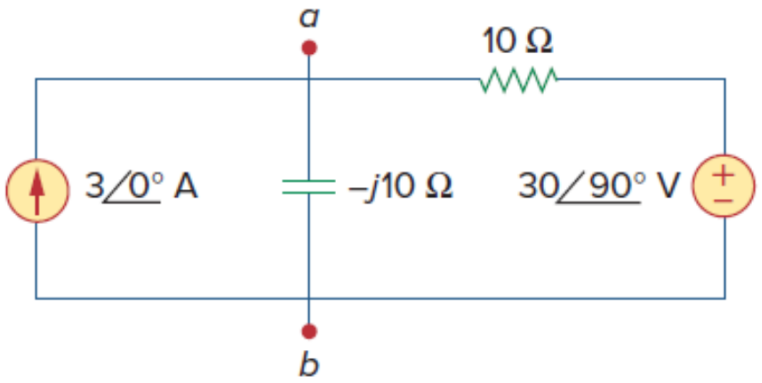

Figure 10.101
For Prob. 10.58.

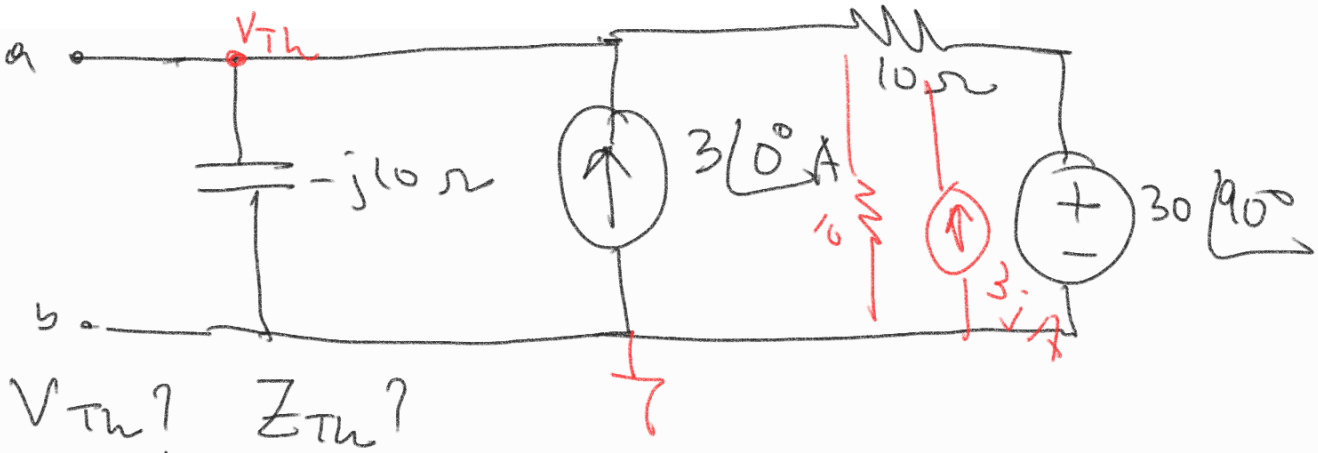

V_{Th}? Z_{Th}?

$V_{Th} = V_{ad} = V_{ab}$

Z_{Th}: kaynakları sıfırlayarak

$$Z_{Th} = -j10 \,//\, 10 = \frac{-j100}{10 - j10} = \frac{-j10}{1-j}$$

$$= \frac{10\angle -90^\circ}{\sqrt{2}\angle -45^\circ}$$

$$= 5\sqrt{2}\angle -45^\circ\ \Omega$$

$$Z_{Th} = 5 - j5\ \Omega$$

V_{Th} : kaynak dönüşümü

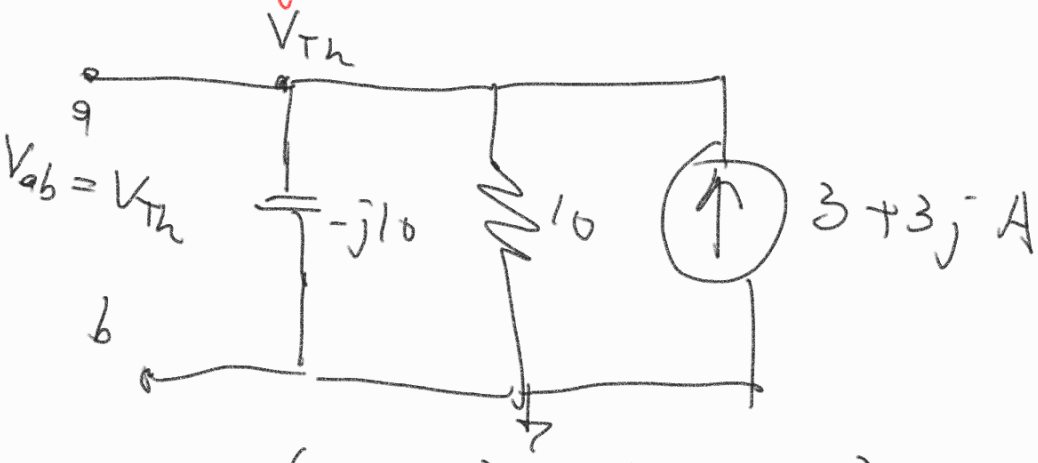

$$V_{Th} = (3+3j) \times (10 \,//\, -j10)$$

$$= (3+3j) \times \frac{-j100}{10-j10} = \frac{(3+3j)(-j10)}{1-j}$$

$$\frac{3\sqrt{2}\,\angle 45^\circ \times 10\,\angle -90^\circ}{\sqrt{2}\,\angle -45^\circ} = 30 = V_{Th}$$

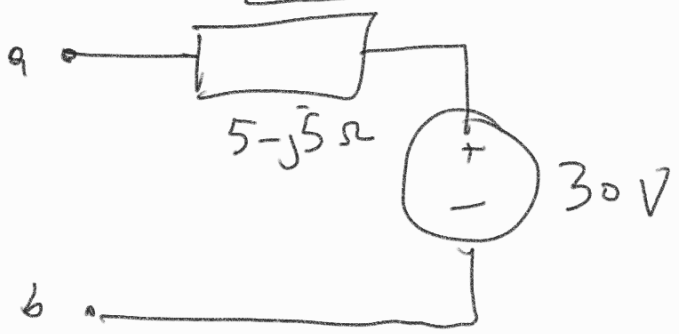

10.61 Find the Thevenin equivalent at terminals *a-b* of the circuit in Fig. 10.104.

ML

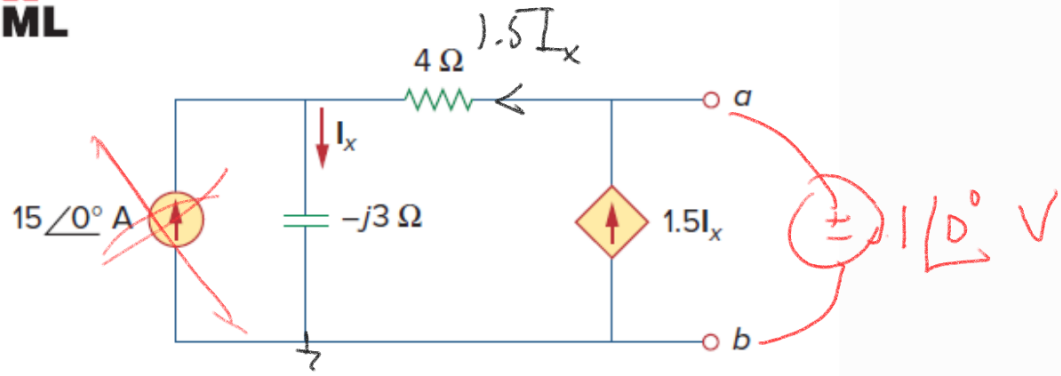

Figure 10.104
For Prob. 10.61.

$V_{ab} = V_{Th}$

$$15 + 1.5\,I_x = I_x \Rightarrow \boxed{I_x = -30\angle 0^\circ \text{ A}}$$

$$V_{ab} = -j3 \times I_x + 4 \times 1.5 I_x = (6-j3) I_x$$
$$= -30(6-j3)$$

$$V_{Th} = -90\sqrt{5} \angle -26^\circ \text{ V}$$
$$V_{Th} = 90\sqrt{5} \angle 154^\circ \text{ V}$$

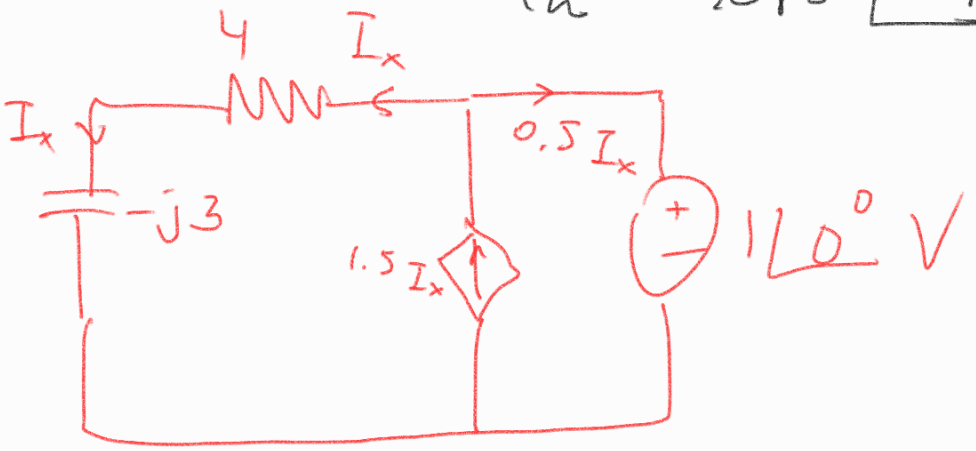

$$(4-j3) I_x = 1$$

$$Z_{Th} = \frac{1\angle 0^\circ}{-0.5 I_x} = \frac{(4-j3)\cancel{I_x}}{-0.5\cancel{I_x}} = -8+j6 \ \Omega$$

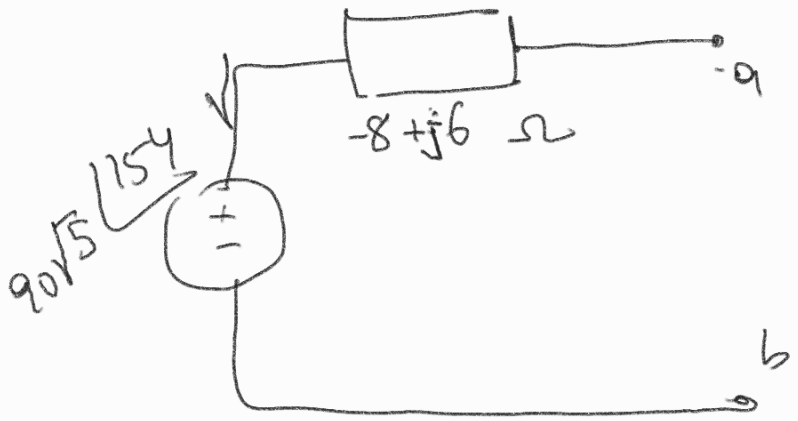

10.72 Compute $i_o(t)$ in the op amp circuit in Fig. 10.115 if $v_s = 4\cos(10^4 t)$ V. $\omega = 10000$

$$\frac{1}{j10^4 \times 10^{-9}}$$

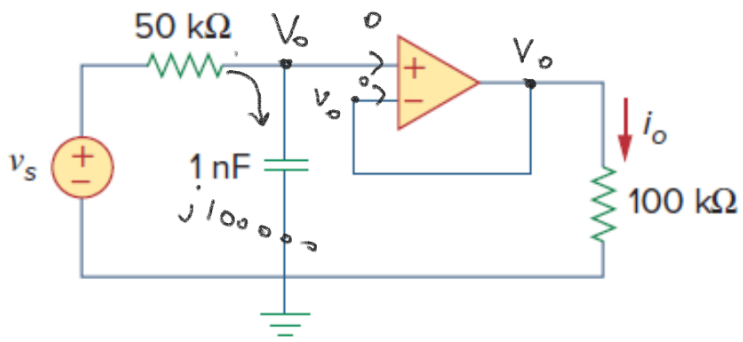

Figure 10.115
For Prob. 10.72.

$$I_o = 4\angle 0^\circ \times \frac{-j\cancel{100000}}{50000 - j100000} \times \frac{1}{\cancel{100000}}$$

$$= \frac{4\angle -90^\circ}{5\times10^4\sqrt{5}\angle -64} = \frac{4}{5\sqrt{5}}\times10^{-4}\angle -26^\circ \text{ A}$$

$$= 0.36\times10^{-4}\angle -26^\circ \text{ A}$$

$$i_o(t) = 36\cos(10^4 t - 26^\circ)\ \mu\text{A}$$

9.51 The circuit shown in Fig. P9.51 is operating at a frequency of 10 rad/s. Assume α is real and lies between -10 and $+10$, that is, $-10 \le \alpha \le 10$.

a) Find the value of α so that the Thévenin impedance looking into the terminals a,b is purely resistive.

b) What is the value of the Thévenin impedance for the α found in (a)? (I_m kısmı sıfır)

c) Can α be adjusted so that the Thévenin impedance equals $500 - j500\ \Omega$? If so, what is the value of α?

d) For what values of α will the Thévenin impedance be inductive? (I_m kısmı pozitif)

$C \rightarrow \frac{1}{j10^{-4}\times10} = -j1000$

Figure P9.51

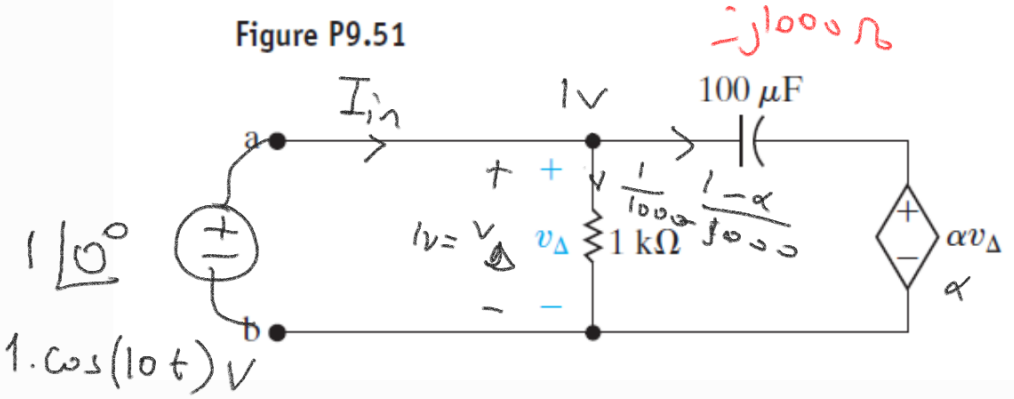

$$I_{in} = \frac{1}{1000} + \frac{1-\alpha}{-j1000}$$

$$I_{in} = \frac{1 + j(1-\alpha)}{1000} \Rightarrow Z_{Th} = \frac{1}{I_{in}} = \frac{1000}{1 + j(1-\alpha)}$$

$\alpha = 1$ olursa $Z_{Th} \in \mathbb{R}$

b) bu durumda $Z_{Th} = 1000\,\Omega$
$(\alpha = 1)$

c) $500 - j500 = \dfrac{1000}{1 + j(1-\alpha)}$

$\boxed{\alpha = 0 \text{ olsa}}$

$$Z_{Th} = \frac{1000}{1+j} = \frac{1000(1-j)}{2} = 500 - j500$$

d) $\mathrm{Im}\left\{\dfrac{1000}{1+j(1-\alpha)}\right\} > 0$ için

$$\mathrm{Im}\left\{\frac{1000\left(1 - j(1-\alpha)\right)}{1+(1-\alpha)^2}\right\} = \frac{-1000(1-\alpha)}{1+(1-\alpha)^2} > 0$$

$\alpha > 1$ olmalı

10.75 In the op amp circuit of Fig. 10.118, find the closed-loop gain and phase shift of the output voltage with respect to the input voltage if $C_1 = C_2 = 1$ nF, $R_1 = R_2 = 100$ kΩ, $R_3 = 20$ kΩ, $R_4 = 40$ kΩ, and $\omega = 2000$ rad/s.

$C_1 = C_2 = 1\,nF$

$\dfrac{1}{j\omega C} = \dfrac{1}{j \times 2\times10^3 \times 10^{-9}}$

$= -j\,5\times10^5$

$\dfrac{\bar{V}_o}{\bar{V}_s} = ?$

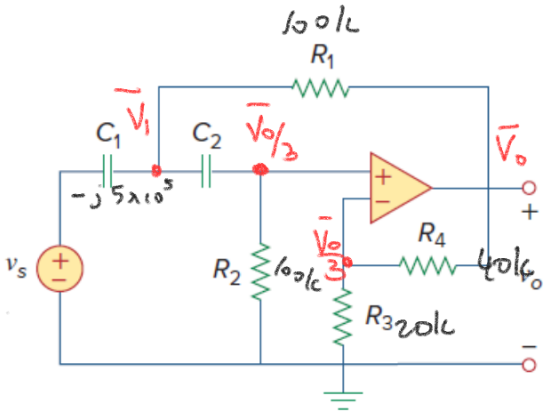

Figure 10.118
For Prob. 10.75.

(1) $\dfrac{V_1 - V_s}{-j\,500000} + \dfrac{V_1 - V_o}{100000} + \dfrac{V_1 - V_o/3}{-j\,500000} = 0$

(j) (5) (j)

(2) $\dfrac{V_1 - \frac{V_o}{3}}{-j\,500000} = \dfrac{V_o/3}{100000}$

(1) $\underbrace{jV_1 - jV_s} + \underbrace{5V_1} - 5V_o + \underbrace{jV_1} - j\frac{V_o}{3} = 0$

$$(5+2j)V_1 - \left(5+\frac{j}{3}\right)V_o = jV_s$$

(2) $V_1 - \frac{V_o}{3} = -j\frac{5}{3}V_o \Rightarrow 3V_1 - V_o = -j5V_o$

$$\boxed{V_1 = \frac{1-j5}{3}V_o}$$

$$(5+2j)\frac{(1-j5)}{3}V_o - \left(5+\frac{j}{3}\right)V_o = jV_s$$

$$\frac{(5+2j)(1-j5) - 15 - j}{3}V_o = jV_s$$

$$\frac{V_o}{V_s} = \frac{3j}{(5+2j)(1-j5)-15-j} = \frac{3j}{\cancel{5}-j25+2j+\cancel{10}-\cancel{15}-j}$$

$$= \frac{3j}{-j24} = -1/8$$

$$\boxed{\frac{V_o}{V_s} = -1/8}$$

$$\boxed{\text{Kazanç} = 1/8}$$

Not: $\omega \to \infty$: $V_1 \to V_s$: $V_o \to 3V_s$ $\boxed{\text{Kazanç} \to 3}$

$\omega \to 0$: $V \to 0$: $V_o \to 0$ $\boxed{\text{Kazanç} \to 0}$

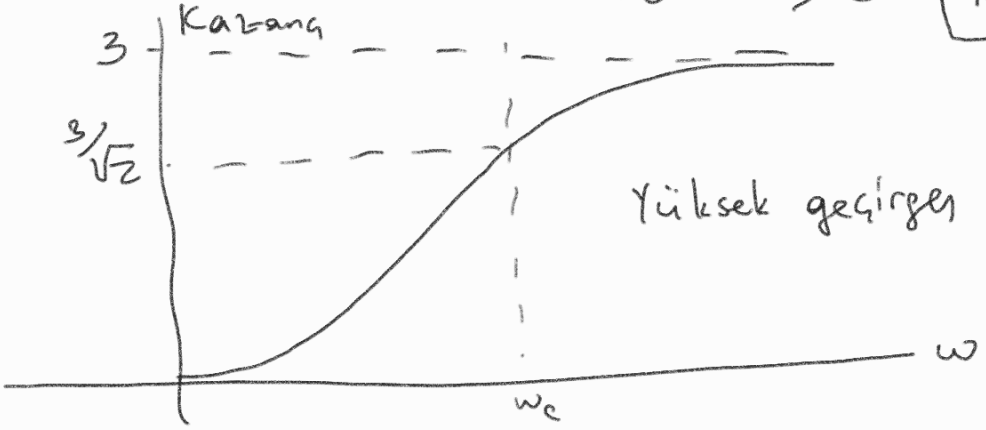

10.95 Figure 10.136 shows a *Hartley oscillator*. Show that the frequency of oscillation is

$$f_o = \frac{1}{2\pi\sqrt{C(L_1 + L_2)}}$$

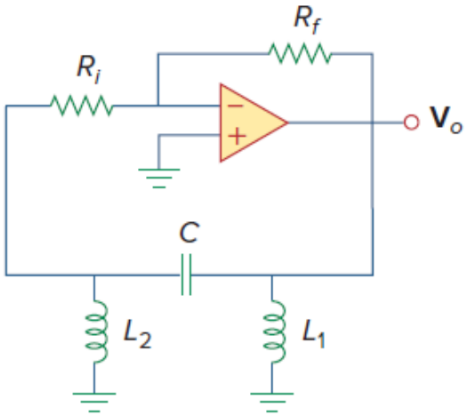

Figure 10.136
A Hartley oscillator; for Prob. 10.95.

CH 11 : AC (ALTERNATİF AKIM) GÜÇ ANALİZİ

$$p(t) = v(t)\, i(t)$$

$$p(t) = \underbrace{\frac{1}{2} V_m I_m \cos(\theta_v - \theta_i)}_{\text{ort. güç.}} + \frac{1}{2} V_m I_m \cos(2\omega t + \theta_v + \theta_i)$$

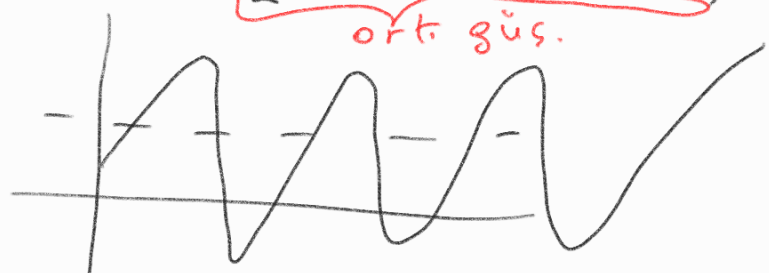

$$P = \frac{1}{2} V_m I_m \cos(\theta_v - \theta_i) = \frac{1}{2} \mathrm{Re}\{\bar{V}\,\bar{I}^*\}$$

Maks. ort. güç tr : $Z_L = Z_{Th}^*$ $\Rightarrow$ $P^{max} = \dfrac{|V_{Th}|^2}{8 R_{Th}}$

Yük tamamen resistif olacaksa : $R_L = |Z_{Th}|$

r.m.s değer : etkin değer, efektif değer

$$I_{rms} = I_{eff} = \sqrt{\frac{1}{T}\int_0^T i(t)^2\, dt}$$

$$P = \mathrm{Re}\{\bar{V}_{rms} \cdot \bar{I}_{rms}^*\} = V_{rms} I_{rms} \cos(\theta_v - \theta_i)$$

$S = \bar{V}_{rms} \bar{I}_{rms}^*$ kompleks güç

güç faktörü $\cos(\theta_v - \theta_i)$

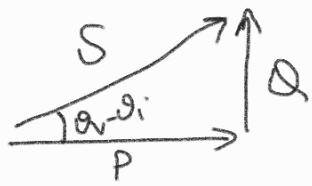

11.5 Assuming that $v_s = 8\cos(2t - 40°)$ V in the circuit of Fig. 11.37, find the average power delivered to each of the passive elements.

$\frac{1}{j2 \times 0.25}$

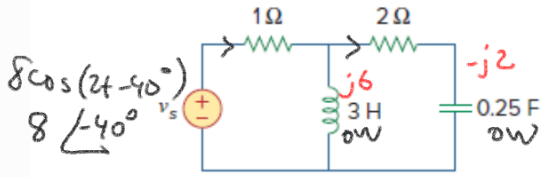

Figure 11.37
For Prob. 11.5.

$$P = \frac{1}{2} V_m I_m \cos(\theta_v - \theta_i)$$
$$= \frac{1}{2} \mathrm{Re}\{\bar{V} I^*\}$$

$R: \theta_v - \theta_i$

$v = iR \longrightarrow V = IR$

$\frac{V}{I} = R \quad \boxed{\theta_v - \theta_i = 0}$

$L: V = I j\omega L$

$V/I = j\omega L \quad \theta_v - \theta_i = 90° \longrightarrow \cos(\theta_v - \theta_i) = 0 \Rightarrow P_L = 0$

$C: V = I/j\omega C \Rightarrow \frac{V}{I} = \frac{1}{j\omega C} \longrightarrow \theta_v - \theta_i = -90$

$\longrightarrow \cos(\theta_v - \theta_i) = 0 \Rightarrow P_C = 0$

$P_{1\Omega}: \quad P_{1\Omega} = \frac{1}{2}\mathrm{Re}\{\bar{V}_{1\Omega} \bar{I}^*_{1\Omega}\} = \frac{1}{2}\mathrm{Re}\{\bar{I}_{1\Omega} \times 1\Omega \times \bar{I}^*_{1\Omega}\}$

$= \frac{1}{2}\mathrm{Re}\{|\bar{I}_{1\Omega}|^2\} = \frac{1}{2}|\bar{I}_{1\Omega}|^2$

$P_{2\Omega}: \frac{1}{2}|\bar{I}_{2\Omega}|^2$

$$\bar{I}_{1\Omega} = \frac{8\angle -40°}{1 + (j6 \,//\, (2-j2))} = \frac{8\angle -40°}{1 + \frac{j6(2-j2)}{2+j4}} = \frac{8\angle -40° \,(2+j4)}{2+j4+j12+12}$$
$$\cong \frac{8\angle -40° \; 2\sqrt{5}\angle 64°}{14+j16}$$

$$P_{1\Omega} = \frac{1}{2}\,\frac{8^2 \times (2\sqrt{5})^2}{14^2 + 16^2} = \frac{1}{2}\,\frac{64 \times 20}{452} \cong 1.42 \text{ Watt}$$

$$\bar{I}_{2\Omega} = \bar{I}_{1\Omega} \times \frac{j6}{2+j4}$$

$$\frac{1}{2}|I_{2\Omega}|^2 = \underbrace{\frac{1}{2}|\bar{I}_{1\Omega}|^2}_{1.42\text{ W}} \times \frac{36}{2^2+4^2} = 1.42 \times \frac{36}{20} \cong 2.56 \text{ Watt}$$

11.7 Given the circuit of Fig. 11.39, find the average power absorbed by the 10-Ω resistor.

$P_{10\Omega} = ?$

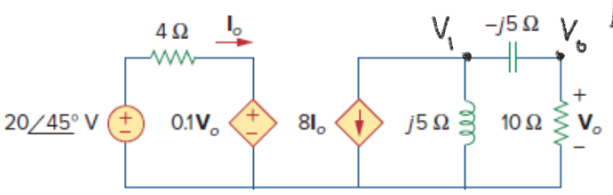

Figure 11.39
For Prob. 11.7.

(1) $20\angle 45^\circ = 4I_o + 0.1V_o$ ←

(2) $8I_o + \frac{V_1}{j5} + \frac{V_1 - V_o}{-j5} = 0 \Rightarrow j40I_o + \cancel{V_1} - \cancel{V_1} + V_o = 0$

$$\boxed{j40I_o = -V_o}$$

$$I_o = \frac{-V_o}{j40}$$

(3) $\frac{V_1}{10-j5} \times 10 = V_o$

(1) $20\angle 45^\circ = \frac{-4V_o}{j40} + 0.1V_o = V_o\left(0.1 - \frac{1}{j10}\right)$

$$V_o = \frac{20\angle 45^\circ}{\frac{j-1}{j10}} = \frac{20\angle 45^\circ}{j-1} j10 = \frac{20\angle 45^\circ \; 10\angle 90^\circ}{\sqrt{2}\angle 135^\circ}$$

$$V_o = \frac{200}{\sqrt{2}}$$

$$\frac{1}{2}Re\{\bar{V}\bar{I}^*\} = \frac{1}{2}Re\left\{\bar{V}\frac{\bar{V}^*}{Z^*}\right\}$$

$$= \frac{1}{2}Re\left\{\frac{|\bar{V}_o|^2}{Z^*}\right\} = \frac{1}{2}\frac{|\bar{V}_o|^2}{10} = \frac{1}{\cancel{2}}\frac{\cancel{4}\times 10^4}{\cancel{2}\times 10}$$

$Z^* \to 10$

$= 1000\,W$

11.17 Calculate the value of $\mathbf{Z}_L$ in the circuit of Fig. 11.48 in order for $\mathbf{Z}_L$ to receive maximum average power. What is the maximum average power received by $\mathbf{Z}_L$?

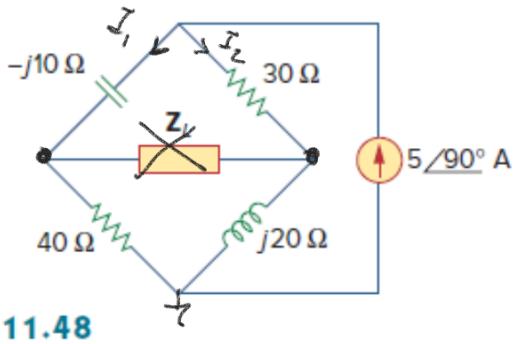

Figure 11.48
For Prob. 11.17.

$Z_L = Z_{Th}^*$ olmalı

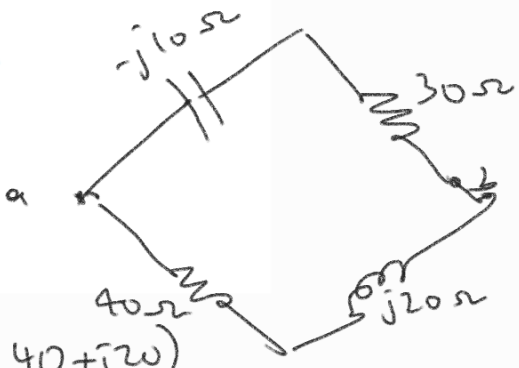

$$Z_{ab} = Z_{Th} = (-j10+30)\,//\,(40+j20)$$

$$= \frac{(30-j10)(40+j20)}{70+j10} = \frac{1200+j600-j400+200}{70+j10}$$

$$= \frac{1400+j200}{70+j10} = 20\ \Omega$$

$$\boxed{Z_L = Z_{Th}^* = 20\ \Omega}$$

$R_{Th} = 20$

$X_{Th} = 0$

$$P^{max} = \frac{|V_{Th}|^2}{8R_{Th}} = \frac{|V_{Th}|^2}{8\times 20}$$

$V_{Th} = ?$

$V_{Th} = V_{ab}$

$$V_{ad} = 40 I_1 - j20 I_2$$

$$= 40 \; 5\angle 90^\circ \frac{30+j20}{70+j10} - j20 \times 5\angle 90^\circ \frac{40-j10}{70+j10}$$

$$= \frac{5\angle 90^\circ}{70+j10}\Big(\underbrace{1200 + \cancel{j800} - \cancel{j800} - 200}_{1000}\Big)$$

$$V_{ad} = \frac{5000\angle 90^\circ}{70+j10} = \bar{V}_{Th}$$

$$P^{max} = \frac{|\bar{V}_{Th}|^2}{160} = \frac{(5000)^2}{5000 \times 160} = \frac{5000}{160} = 31.25 \text{ Watt}$$

11.20 The load resistance R_L in Fig. 11.51 is adjusted until it absorbs the maximum average power. Calculate the value of R_L and the maximum average power.

P^{max}

$R \in \mathbb{R}$

$\boxed{R_L = |Z_{Th}|}$ olmalı

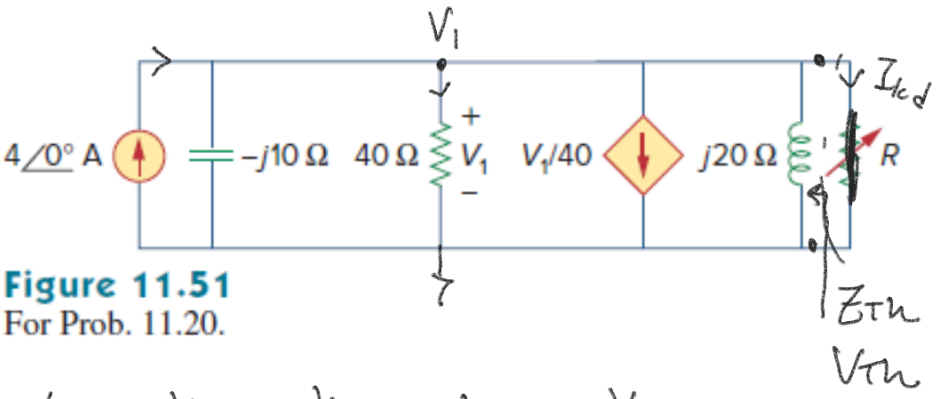

Figure 11.51
For Prob. 11.20.

V_{ad}:

$$4 = \frac{V_1}{-j10} + \frac{V_1}{40} + \frac{V_1}{40} + \frac{V_1}{j20}$$

$$4 = V_1(j4 + 1 + 1 - 2j) \Rightarrow V_1 = \frac{4}{2+j2} = V_{Th} = \frac{4}{2\sqrt{2}\angle 45^\circ} = \sqrt{2}\angle -45^\circ$$

I_{kd}: $V_1 = 0$ olur. $-j10\Omega$ ve 40Ω'dan akım geçmez

$V_1/40$ akımı da sıfır olur.

O zaman $I_{kd} = 4\angle 0^\circ$ olur.

$$Z_{Th} = \frac{V_{ad}}{I_{kd}} = \frac{4}{(2+j2)4} = \frac{1}{2+j2} = \frac{1}{2\sqrt{2}\angle 45^\circ} = \frac{\angle -45^\circ}{2\sqrt{2}} = Z_{Th}$$

$$R_L = |Z_{Th}| = \frac{1}{2\sqrt{2}}\,\Omega$$

$$P_{max} = \frac{|V_{Th}|^2}{8R_L} = \frac{2}{8 \times \frac{1}{2\sqrt{2}}} = \frac{4\sqrt{2}}{8} = \frac{1}{\sqrt{2}}\,W$$

11.30 Compute the rms value of the waveform depicted in Fig. 11.61.

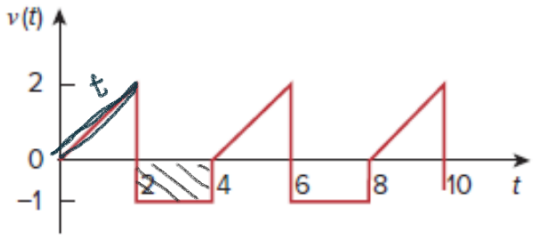

Figure 11.61
For Prob. 11.30.

$$V_{rms} = \sqrt{\frac{1}{4}\int_0^4 v^2(t)\,dt}$$

$$V_{rms} = \sqrt{\frac{1}{4}\int_0^2 v^2(t)\,dt + \frac{1}{4}\underbrace{\int_2^4 v^2(t)\,dt}_{2}}$$

$$= \sqrt{\frac{1}{4}\int_0^2 v^2(t)\,dt + \frac{1}{2}} = \sqrt{\frac{1}{4}\int_0^2 t^2\,dt + \frac{1}{2}}$$

$$= \sqrt{\frac{1}{4}\,\frac{t^3}{3}\Big|_0^2 + \frac{1}{2}} = \sqrt{\frac{2}{3} + \frac{1}{2}} = \sqrt{\frac{7}{6}}$$

7/6

11.39 An ac motor with impedance $\mathbf{Z}_L = 2 + j1.2\ \Omega$ is supplied by a 220-V, 60-Hz source. (a) Find pf, P, and Q. (b) Determine the capacitor required to be connected in parallel with the motor so that the power factor is corrected to unity.

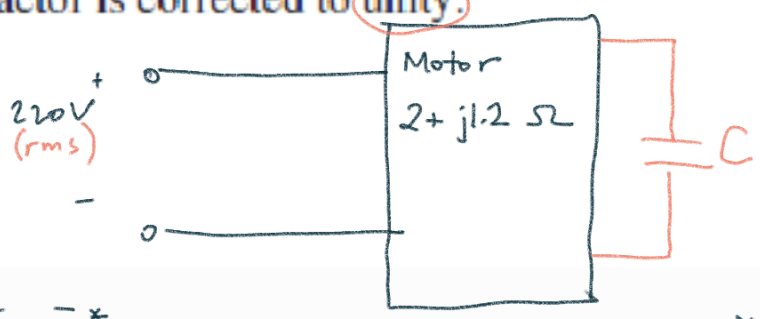

$$\bar{S} = \bar{V}\bar{I}^* = \bar{I}Z\bar{I}^* = \bar{V}\frac{\bar{V}^*}{Z^*} = \frac{|\bar{V}|^2}{Z^*}$$

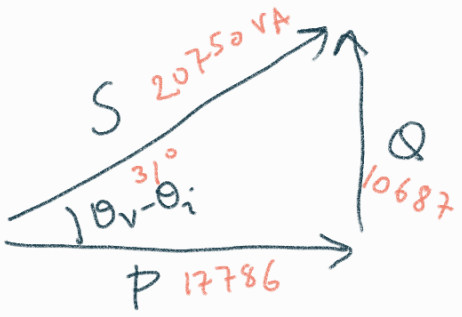

güç faktörü : $\cos(\theta_v - \theta_i) = \frac{P}{S}$

endüktif
lagging
(takip eder)

kapasitif
leading
(önde gider)

$$S = \frac{220^2}{2 - j1.2} = \frac{220^2}{\sqrt{5.44}\,\angle -31^\circ} = 20.75\,\angle 31^\circ \text{ kVA}$$

a) $\boxed{\text{g.f.} : 0.86 \text{ takip eden}}$.

$$\boxed{\begin{array}{ll} P = 17786 \text{ Watt} & \bar{S} = 17786 + j10687 \text{ VA} \\ Q = 10687 \text{ VAR} & \end{array}}$$

b) Kompanzasyon / Güç faktörü düzeltme.

$\omega = 2\pi \times 60$

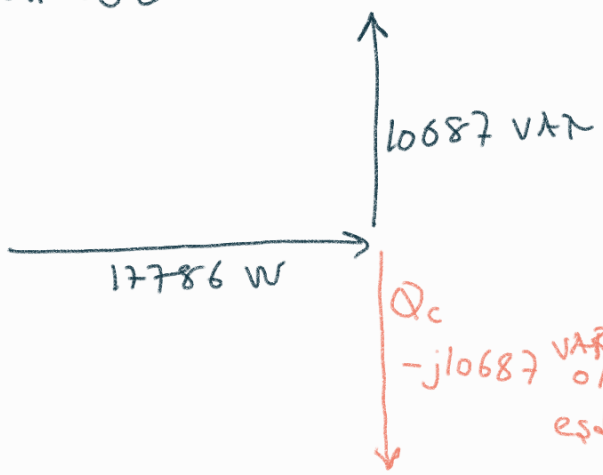

$$S_c = \frac{220^2}{\left(\frac{-j}{\omega C}\right)^*} = \frac{220^2 \omega C}{j}$$

$$= \cancel{-j}220^2 \omega C = \cancel{-j}10687$$

$$\Rightarrow 220^2 \times 120\pi \times C = 10687$$

$$C = \frac{10687}{220^2 \times 120\pi}$$

$= 0.561$ mF

11.45 The voltage across a load and the current through it are given by

$$v(t) = 20 + 60 \cos 100t \text{ V}$$
$$i(t) = 1 - 0.5 \sin 100t \text{ A} = 1 - 0.5 \cos(100t - 90^\circ)$$

Find:

(a) the rms values of the voltage and of the current

(b) the average power dissipated in the load

a) $\sqrt{\frac{1}{T}\int_0^T (20 + 60\cos 100t)^2 \, dt}$ $\left(T = \frac{2\pi}{100}\right)$

$$= \sqrt{\frac{1}{T}\int_0^T 400 + \cancel{2400\cos 100t} + 3600 \underbrace{\cos^2 100t}_{\frac{1+\cos 200t}{2}} \, dt}$$

$\to 0$ $\to 0$

$V_{rms} = \sqrt{400 + 1800} = \sqrt{2200} = 46.9$ V

$I_{rms} = \sqrt{1^2 + \frac{0.5^2}{2}} = \sqrt{1.125} \cong 1.061$ A

b) $p(t) = v(t)\, i(t)$

$= (20 + 60\cos 100t)(1 - 0.5 \sin 100t)$

$= 20 - 10\sin 100t + 60\cos 100t - 30\cos(100t)\cos(100t - 90)$

$p(t) = 20 - 10\cos(100t - 90) + 60\cos(100t) - 15\cos(200t - 90^\circ)$

$-15\cos(90^\circ)$

$\boxed{P = 20 \text{ Watt} \quad \text{ort. güç}}$

11.52 In the circuit of Fig. 11.71, device *A* receives 2 kW at 0.8 pf lagging, device *B* receives 3 kVA at 0.4 pf leading, while device *C* is inductive and consumes 1 kW and receives 500 VAR.

(a) Determine the power factor of the entire system.

(b) Find **I** given that $\mathbf{V}_s = 120\angle 45^\circ$ V rms.

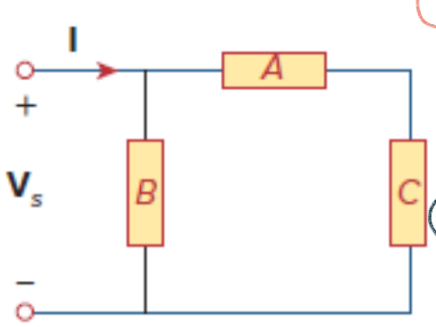

Figure 11.71
For Prob. 11.52.

A

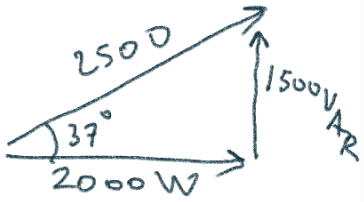

B

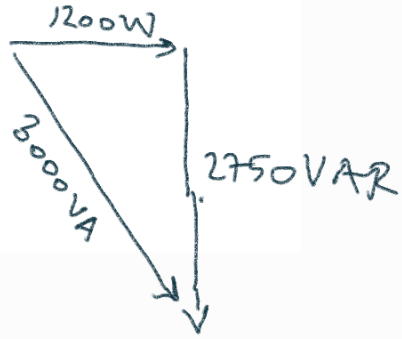

$\bar{S}_{eş} = 2000 + j1500$
$+ 1200 - j2750$
$+ 1000 + j500$
$= 4200 - j750$

C

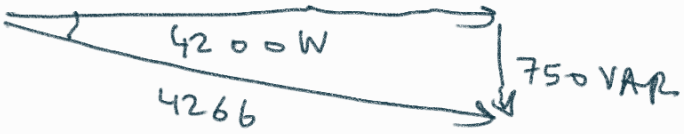

p.f. 0.985 önde giden (kapasitif)

b) $\bar{S}_{eş} = \bar{V}_s \bar{I}^*$

$4266\angle -9.78^\circ = 120\angle 45^\circ \; \bar{I}^*$

$\bar{I}^* = 35.6\angle -54.78^\circ \Rightarrow \boxed{\bar{I} = 35.6\angle 54.78^\circ \text{ A}}$

11.59 Calculate the reactive power in the inductor and capacitor in the circuit of Fig. 11.78.

ML

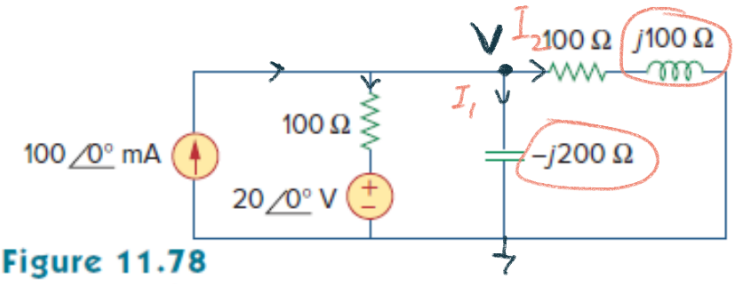

Figure 11.78
For Prob. 11.59.

$$0.1 = \frac{V-20}{100} + \frac{V}{-j200} + \frac{V}{100+j100}$$

$$10 = V-20 + \frac{V}{-j2} + \frac{V(1-j)}{(1+j)(1-j)}$$

$$10 = V-20 + \frac{V}{-j2} + \frac{V(1-j)}{2}$$

$$10 = \frac{-j2V + j40 + jV + V(1-j)}{2}$$

$$20 - j40 = V(-j2 + j + 1 - j)$$

$$V = \frac{20-j40}{1-j2} = 20 \text{ V}$$

$$I_1 = \frac{20}{-j200} \qquad I_2 = \frac{20}{100+j100}$$

$$I_1 = 0.1 \angle 90^\circ \qquad = \frac{20}{100\sqrt{2}\angle 45} = \frac{1\angle -45^\circ}{5\sqrt{2}}$$

$$\bar{S}_{-j200} = \frac{1}{2}|\bar{I}_1|^2(-j200) \qquad \bar{S}_{j100} = \frac{1}{2}|\bar{I}_2|^2 j100$$

$$= -j \text{ VA} \qquad = \frac{1}{2}\,\frac{1}{50}\,j100 = j \text{ VA}$$

0W ve −1 VAR

0W ve 1 VAR

11.61 Given the circuit in Fig. 11.80, find I_o and the overall complex power supplied.

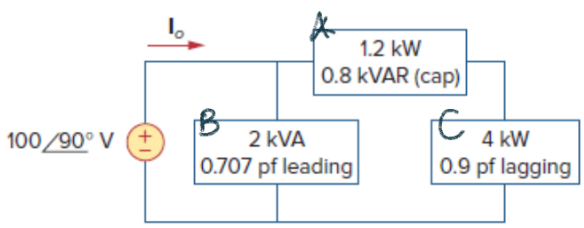

Figure 11.80
For Prob. 11.61.

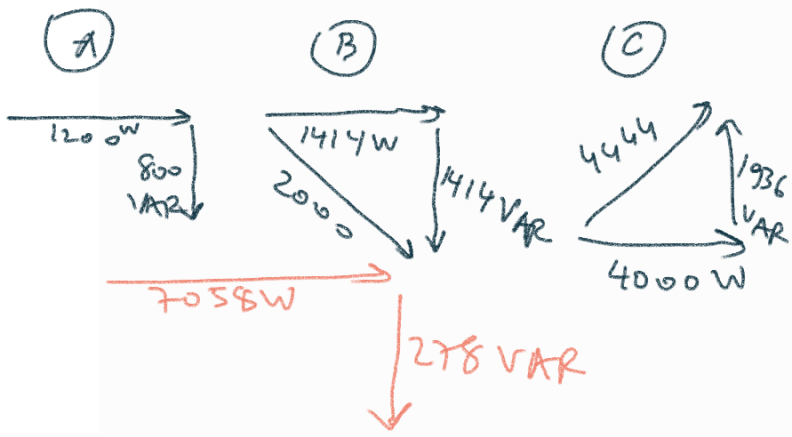

$$7058 - j278 = \frac{1}{2} 100 \angle 90^\circ \; I_o^*$$

$$= j50 \; I_o^*$$

$$I_o = \left(\frac{7058 - j278}{j50} \right)^* = \frac{7058 - j278}{-j50} \; \frac{j}{j}$$

$$= \frac{278 + j7058}{50} \; A$$

11.67 For the op amp circuit in Fig. 11.86, calculate:

(a) the complex power delivered by the voltage source

(b) the average power dissipated in the 10-Ω resistor

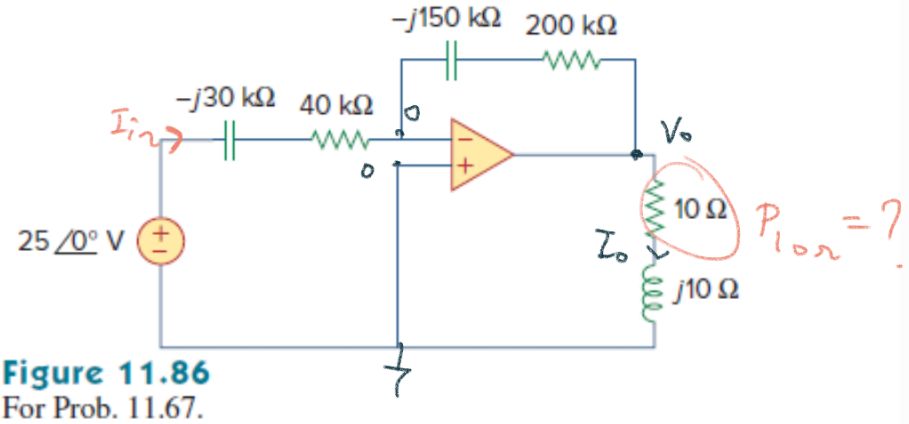

Figure 11.86
For Prob. 11.67.

$$V_o = -25 \times \cancel{\frac{200000 - j150000}{40000 - j30000}} \; 5 = -125 \angle 0^\circ \; V$$

$$I_o = \frac{-125}{10 + j10} \Rightarrow P_{10\Omega} = \frac{1}{2} |I_o|^2 \, 10$$

$$= \frac{1}{2} \frac{125^2}{200} \times 10 = 390.6 \, W$$

$$I_{in} = \frac{25}{40000 - j30000}$$

$$\bar{S}_s = \frac{1}{2} (-25) \times \bar{I}_{in}^* = \frac{-25}{2} \; \frac{25}{40000 + j30000}$$

$$\bar{S}_s = \frac{-625}{100000 \angle 37^\circ} = -625 \times 10^{-5} \angle -37^\circ \; VA$$

11.73 A 240-V rms 60-Hz supply serves a load that is 10 kW (resistive), 15 kVAR (capacitive), and 22 kVAR (inductive). Find:

(a) the apparent power
(b) the current drawn from the supply
(c) the kVAR rating and capacitance required to improve the power factor to 0.96 lagging
(d) the current drawn from the supply under the new power-factor conditions

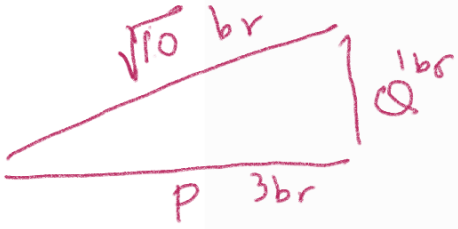

$\boxed{P = 3Q} \Rightarrow$ p.f. 0.96

a) $\bar{S} = 10000 + j7000$ VA

$S = \sqrt{149}$ kVA

b) $\bar{I}_\ell = \dfrac{10000 - j7000}{240} \Rightarrow |I_\ell| = \dfrac{\sqrt{149} \times 1000}{240} \simeq 50.83$ A

c)

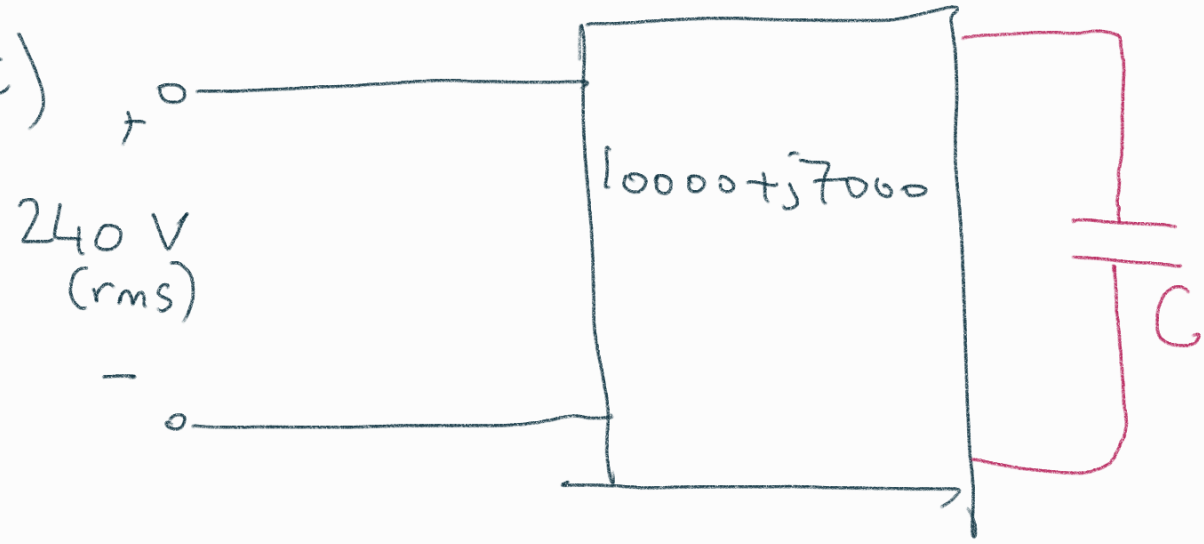

$\cos^{-1}(0.96) = 16.3^\circ$

$\tan(16.3^\circ) = 0.29$

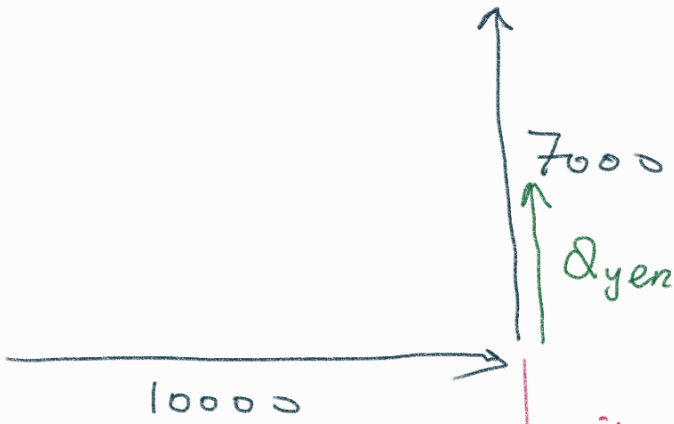

$Q_{yeni} = 2900$

$-j4100 = Q_c$ olmalı

$\dfrac{240^2}{Z_c^*} = -j4100$

$\longrightarrow \cancel{-j}\, 240^2 \times 120\pi \times C = \cancel{-j}4100 \Rightarrow \boxed{C = 188\,\mu F}$

d) $\bar{S}_{yeni} = 10000 + j2900\,VA$

$= 240\,\bar{I}^{*}_{yeni}$

$\bar{I}_{yeni} = \dfrac{10000 - j2900}{240}\,A$

$|\bar{I}_{yeni}| = \dfrac{10.41 \times 1000}{240} = 43.38$

(Not: Hattaki kayıp $|\bar{I}_l|^2$ ile orantılı kayıpta kabaca %30 azalma olur.)

11.85 A regular household system of a single-phase three-wire circuit allows the operation of both 120-V and 240-V, 60-Hz appliances. The household circuit is modeled as shown in Fig. 11.96. Calculate:

(a) the currents $\mathbf{I}_1$, $\mathbf{I}_2$, and $\mathbf{I}_n$

(b) the total complex power supplied

(c) the overall power factor of the circuit

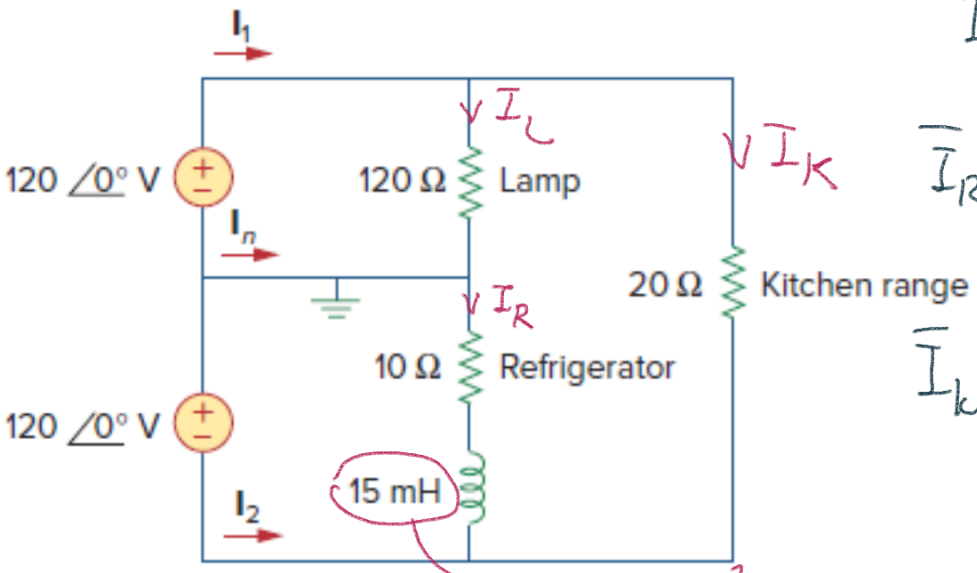

$I_L = \dfrac{120}{120} = 1\angle 0^\circ\,A$

$\bar{I}_R = \dfrac{120}{10 + j5.65} = \dfrac{120}{11.5\angle 29.5^\circ}$

$\bar{I}_k = \dfrac{240}{20} = 12\angle 0^\circ\,A$

$j15 \times 10^{-3} \times 120\pi = j5.65\,\Omega$

Figure 11.96
For Prob. 11.85.

$\bar{I}_1 = \bar{I}_L + \bar{I}_k = 1\angle 0^\circ + 12\angle 0^\circ = 13\angle 0^\circ$

$I_2 = -I_R - \bar{I}_K = \dfrac{-120}{11.5\angle 29.5^\circ} - 12$

$$\bar{I}_n = \bar{I}_R - \bar{I}_L = \frac{120}{10+j5.65} - 1$$

b) $\bar{S}_L = \frac{1}{2}|\bar{I}_L|^2 120 = 60\,W \longrightarrow 60\,W$

$\bar{S}_K = \frac{1}{2}|\bar{I}_K|^2 20 = \frac{1}{2}\,12^2 \times 20 = 1440\,W \longrightarrow 1440\,W$

$\bar{S}_R = \frac{1}{2}|\bar{I}_R|^2(10+j5.65) = \frac{1}{2}\,\frac{120^2}{11.5^2}(10+j5.65)$

$= 54.4(10+j5.65)$

$= 544.4 + j307.6\ VA$

$+$

$2044.4 + j307.6\ VA$ Sağlanmıştır kaynak tarafından

c)

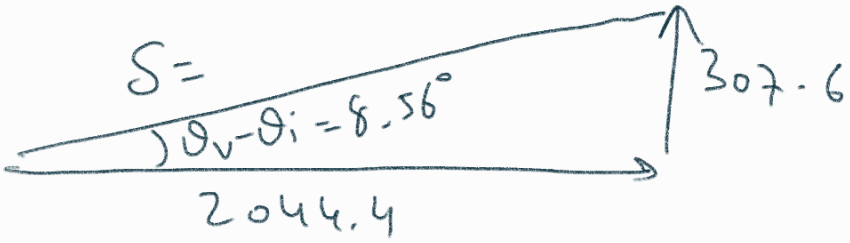

pf. 0.9888 (lagging) takip eden

11.91 The nameplate of an electric motor has the following information:

Line voltage: 220 V rms
Line current: 15 A rms
Line frequency: 60 Hz
Power: 2700 W

Determine the power factor (lagging) of the motor. Find the value of the capacitance C that must be connected across the motor to raise the pf to unity.

$\bar{S} = V I^*$ $\qquad S = \underbrace{|V|}_{220}\underbrace{|I|}_{15}$

$S = 3300\ VA$ görünen güç

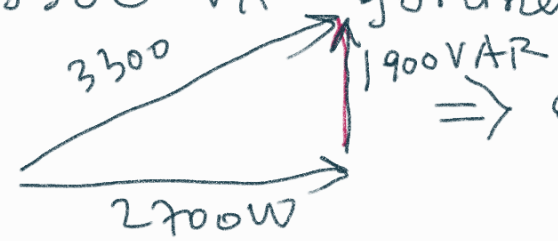

$\Rightarrow$ g.f. $= \frac{2700}{3300} = 0.81$ (lagging)

$-j1900 = Q_c = -j220^2 \times 120\pi \times C$

$\Rightarrow C \simeq 104\ \mu F$ olmalı

1.95 A coupling capacitor is used to block dc current from an amplifier as shown in Fig. 11.98(a). The amplifier and the capacitor act as the source, while the speaker is the load as in Fig. 11.98(b).

(a) At what frequency is maximum power transferred to the speaker?

(b) If $V_s = 4.6$ V rms, how much power is delivered to the speaker at that frequency?

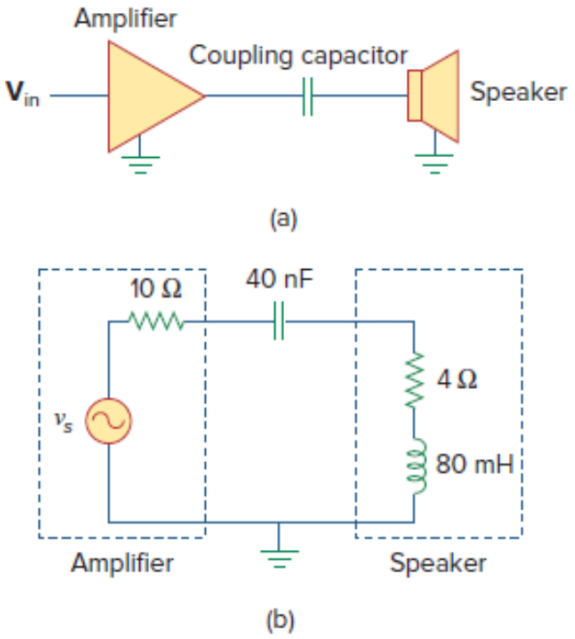

Figure 11.98
For Prob. 11.95.

10.6 Find the average power dissipated in the 30 Ω resistor in the circuit seen in Fig. P10.6 if $i_g = 6 \cos 20{,}000t$ A.

PSPICE
MULTISIM

Figure P10.6

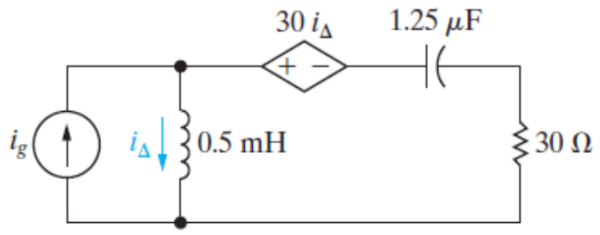

CHAPTER 12 : ÜÇ FAZLI DEVRELER

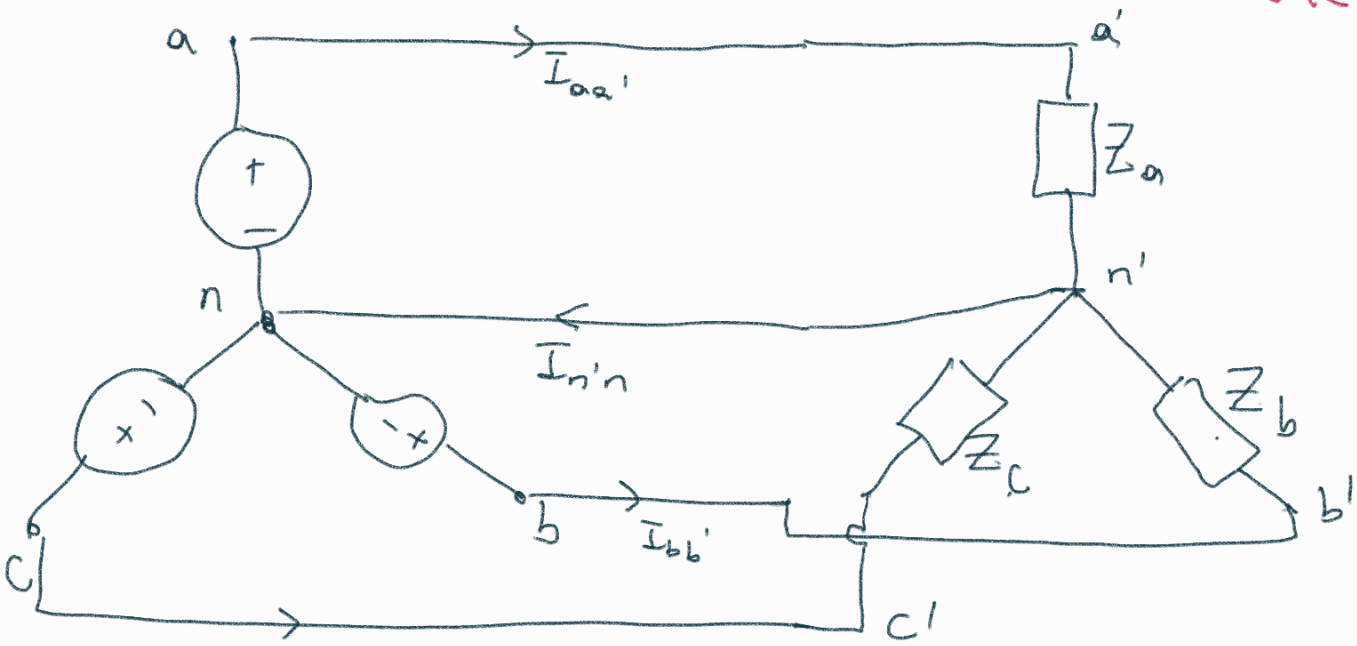

$Z_a = Z_b = Z_c$ olurse

$I_{n'n} = 0$ olur.

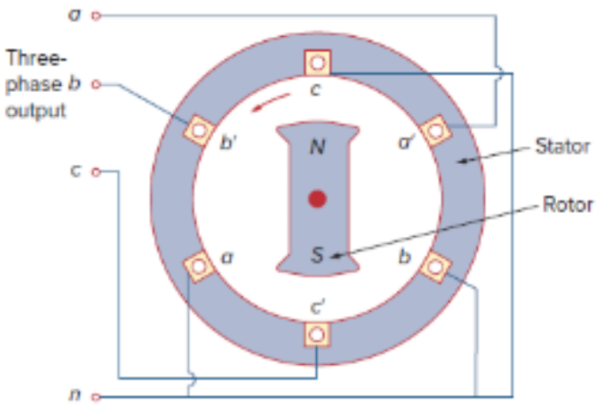

Figure 12.4
A three-phase generator.

Rotor ↺ saat yönünün tersine dönerse

$\bar{V}_a = V_p \angle 0^\circ$ V

$\bar{V}_b = V_p \angle -120^\circ$ V

$\bar{V}_c = V_p \angle -240^\circ$ V $= V_p \angle +120$

buna <u>abc</u> dizisi denir.

(Not: Rotor ↻ dönerse o zaman acb dizisi olur. $\bar{V}_a = V_p \angle 0^\circ$ $\bar{V}_c = V_p \angle -120^\circ$ $\bar{V}_b = V_p \angle -240^\circ$)

$$\bar{V}_a + \bar{V}_b + \bar{V}_c = 0$$

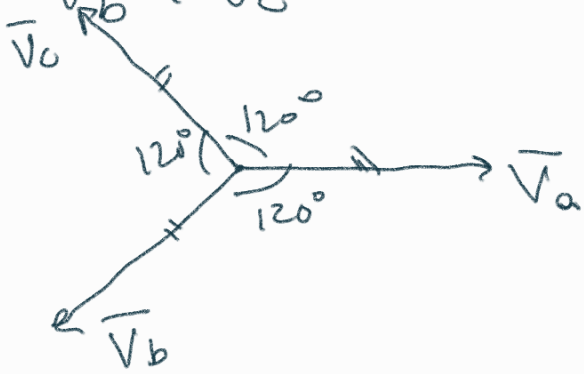

Dengeli 3 Faz: $Z_a = Z_b = Z_c$

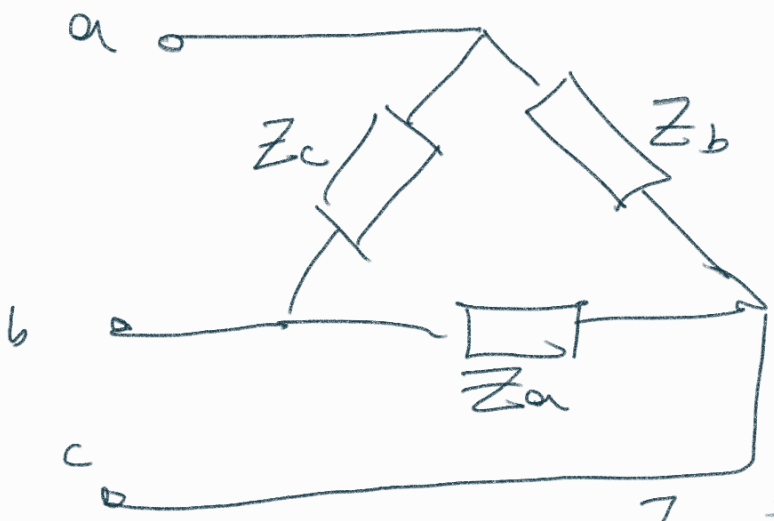

Y - Yük:

$Z_1 = Z_2 = Z_3 = Z_Y$ ise

$\Downarrow$

Δ'ya çevirirseh

$Z_\Delta = Z_a = Z_b = Z_c = 3Z_Y$ olur

$Z_\Delta = 3Z_Y$

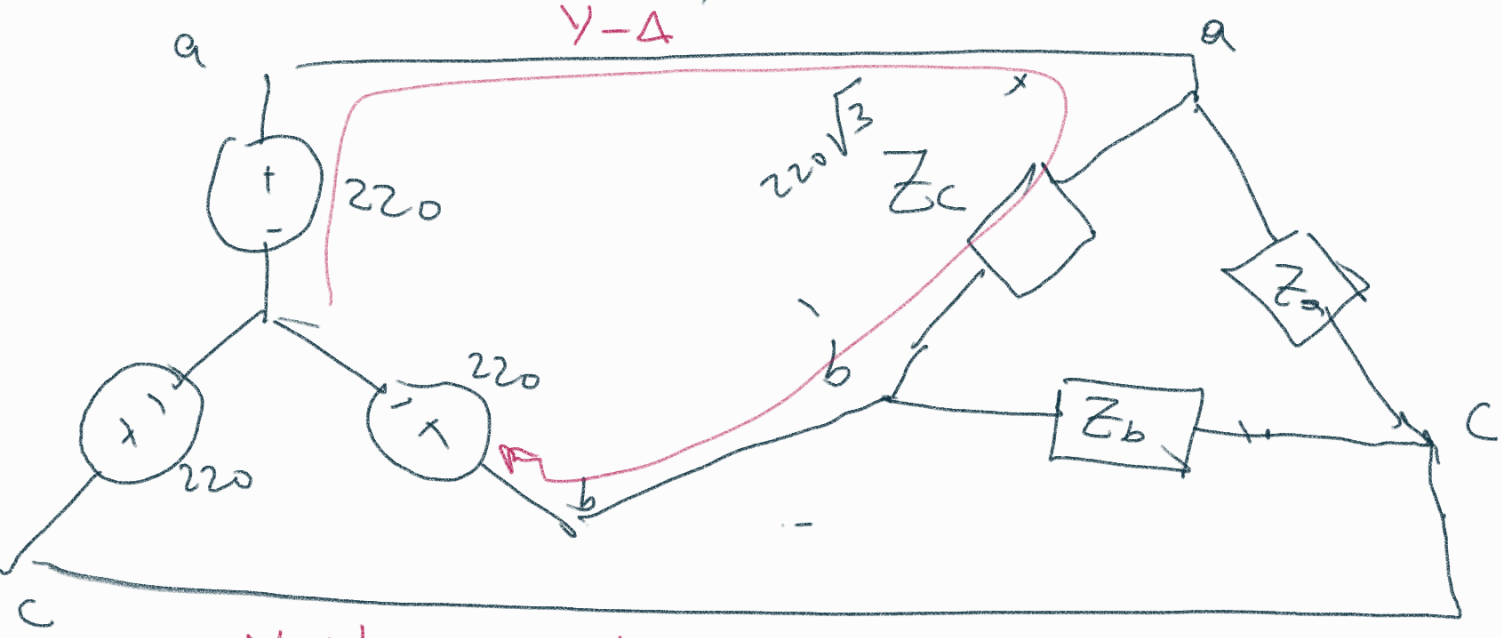

Y-Y ve Y-Δ

12.3 Given a balanced Y-connected three-phase generator with a line-to-line voltage of $\mathbf{V}_{ab} = 100\angle 45°$ V and $\mathbf{V}_{bc} = 100\angle 165°$ V, determine the phase sequence and the value of $\mathbf{V}_{ca}$.

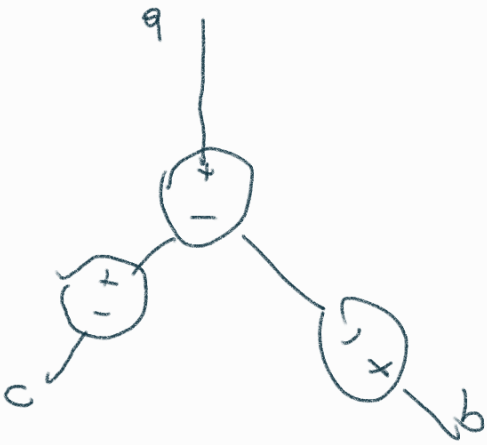

a b c dizisi

$V_a = V_p\angle 0°$ $V_b = V_p\angle -120°$ $V_c = V_p\angle 240°$

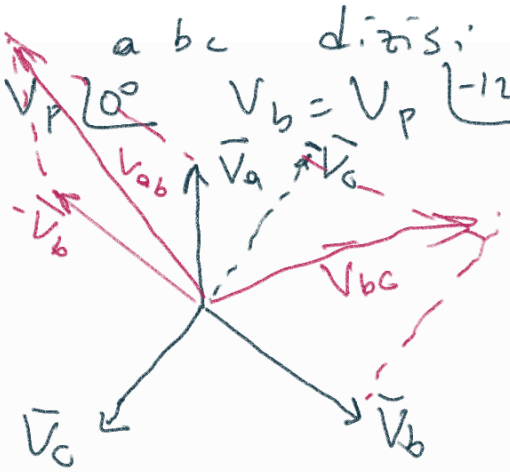

$\overline{V}_{ab} = \overline{V}_a - \overline{V}_b$ $\qquad$ $\overline{V}_{bc} = \overline{V}_b - \overline{V}_c$

abc dizisi olsaydı $\qquad$ $V_a \rightarrow V_b \rightarrow V_c$

$V_{ab} \rightarrow V_{bc} \rightarrow V_{ca}$

sıralam aynı olurdu.

Burada ise öyle değil

$\overline{V}_{bc}$, $\overline{V}_{ab}$'den 120° ileride.

Ozaman demek ki burada acb dizisi var.

$\overline{V}_{ab} = 100\angle 45^\circ$ $\qquad$ $\overline{V}_{bc} = 100\angle 165^\circ$

$$\boxed{\overline{V}_{ca} = 100\angle -75^\circ}$$

$\overline{V}_{ab} \rightarrow \overline{V}_{ca} \rightarrow \overline{V}_{bc}$ şeklinde.

12.8 In a balanced three-phase Y-Y system, the source is an *acb* sequence of voltages and $\mathbf{V}_{an} = 120\angle 35^\circ$ V rms. The line impedance per phase is $(1 + j2)\ \Omega$, while the per-phase impedance of the load is $(11 + j14)\ \Omega$. Calculate the line currents and the load voltages.

V_{cn}

acb:

$\overline{V}_{an} = 120\angle 155^\circ$ V $\qquad$ $\overline{V}_{cn} = 120\angle 35^\circ$ V

$\overline{V}_{bn} = 120\angle -85^\circ$ V

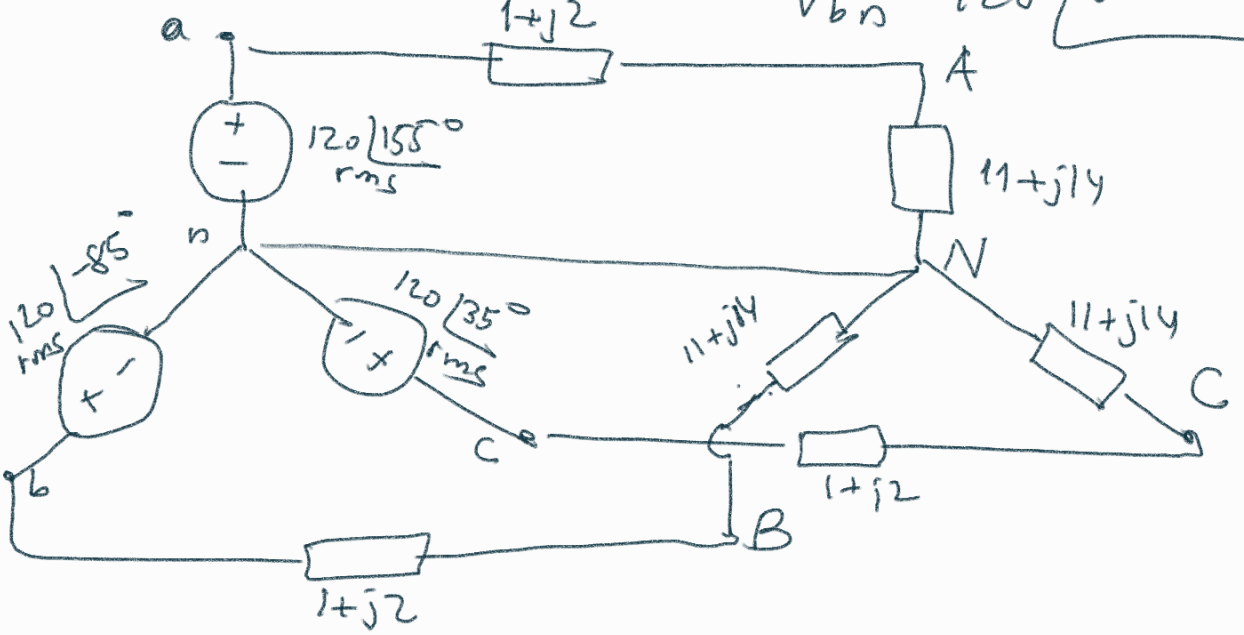

Hat akımı , Faz akımı

Hat gerilimi , Faz gerilimi

Hatlar arası gerilim.

Y bağlantıda hat ve faz akımları aynı şey.

Dengeli olduğu için 3 ayrı devre var gibi.

a c b

$$\bar{I}_{aA} = \frac{120\angle 155^\circ}{12+j16} = \frac{120\angle 155^\circ}{20\angle 53^\circ} = 6\angle 102^\circ \text{ A}$$

$$\bar{I}_{cC} = 6\angle -18^\circ \text{ A}$$

$$\bar{I}_{bB} = 6\angle -138^\circ \text{ A}$$

$$\bar{V}_{AN} = \bar{I}_{aA}(11+j14)$$

$$\bar{V}_{CN} = \bar{I}_{cC}(11+j14)$$

$$\bar{V}_{BN} = \bar{I}_{bB}(11+j14)$$

Yükteki faz gerilimleri

12.13 In the balanced three-phase Y-Δ system in Fig. 12.46, find the line current I_L and the average power delivered to the load.

ML

abc varsayalım

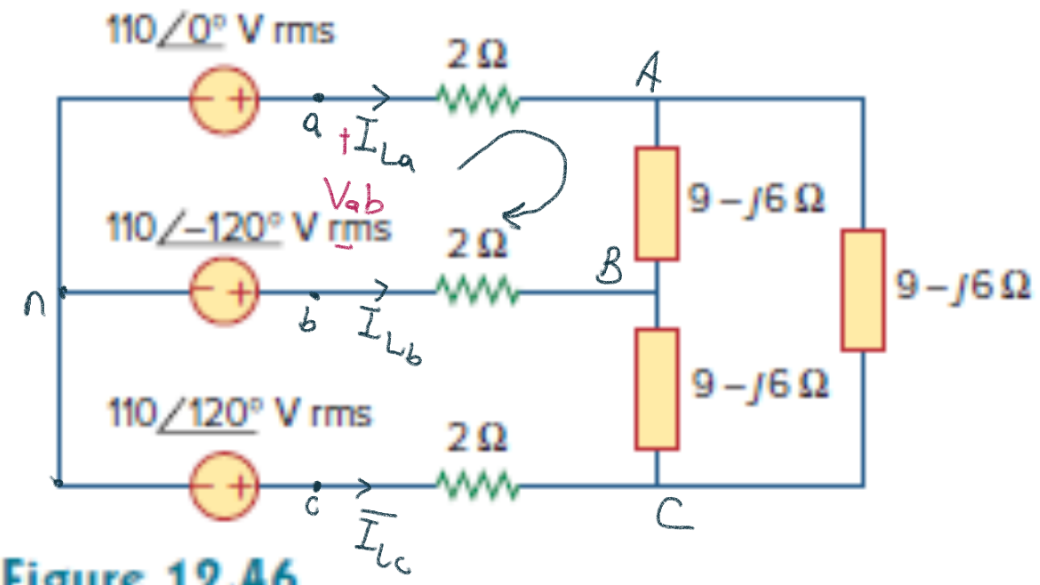

Figure 12.46
For Prob. 12.13.

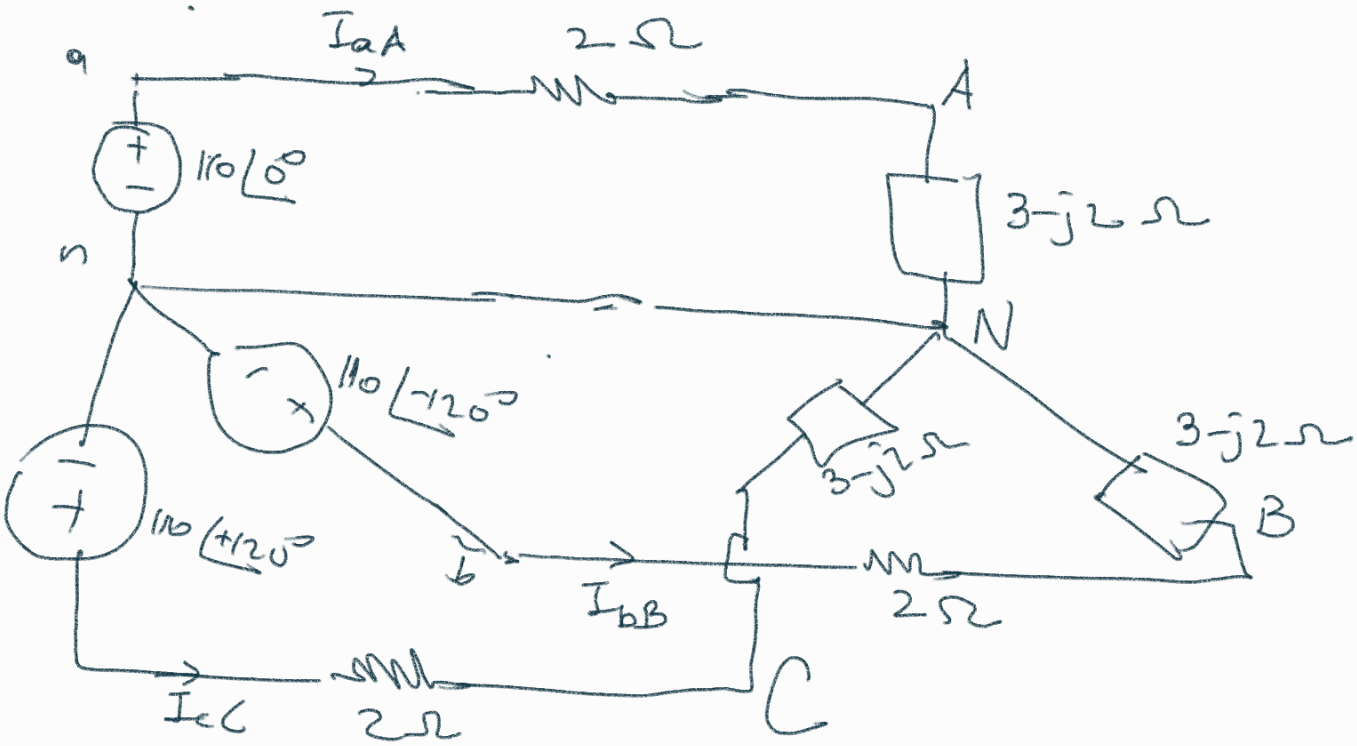

$$\bar{I}_{la} = \bar{I}_{aA} = \frac{110\angle 0^\circ}{5-j2} = \frac{110\angle 0^\circ}{\sqrt{29}\angle -21.8^\circ} = 20.4\angle 21.8^\circ \text{ A}$$

$$\bar{I}_{lb} = \bar{I}_{bB} = 20.4\angle -98.2^\circ \text{ A}$$

$$\bar{I}_{lc} = \bar{I}_{cC} = 20.4\angle 141.8^\circ \text{ A}$$

$$\boxed{I_L = 20.4}$$

$$\boxed{\sqrt{3}\, V_L I_L \underbrace{\cos\theta}_{0.83} = P}$$

$$\bar{V}_{AN} = \bar{I}_{aA}(3-j2) = 73.66\angle -12.1^\circ$$

$$\bar{V}_{AB} = \sqrt{3}\,\bar{V}_{AN}\angle 30^\circ$$

$$= 127.58\angle 17.9^\circ$$

$$V_L = 127.58$$

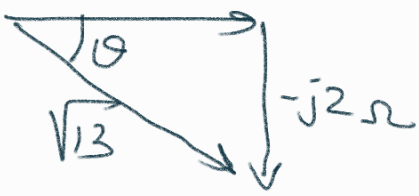

$$\theta = -33.7^\circ$$

$$\cos\theta = 0.83$$

$P = \sqrt{3} \times 127.58 \times 20.4 \times 0.83 = 3747\ W$

$V_{an} = 220\angle 60^\circ$

12.18 If $\mathbf{V}_{an} = 220\angle 60^\circ$ V in the network of Fig. 12.49, find the load phase currents $\mathbf{I}_{AB}$, $\mathbf{I}_{BC}$, and $\mathbf{I}_{CA}$.

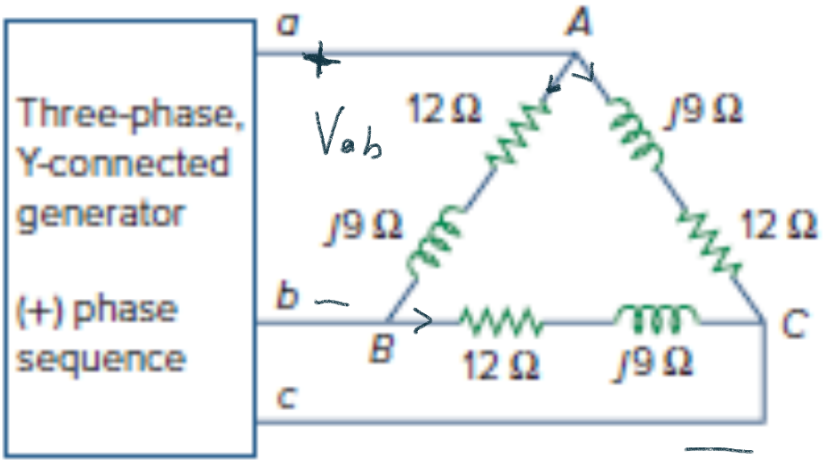

$V_{ab} = V_{AB}$ kaynak ve yükteki hat gerilimi.

Figure 12.49
For Prob. 12.18.

$\bar{V}_{ab} = \bar{V}_{an} - \bar{V}_{bn}$

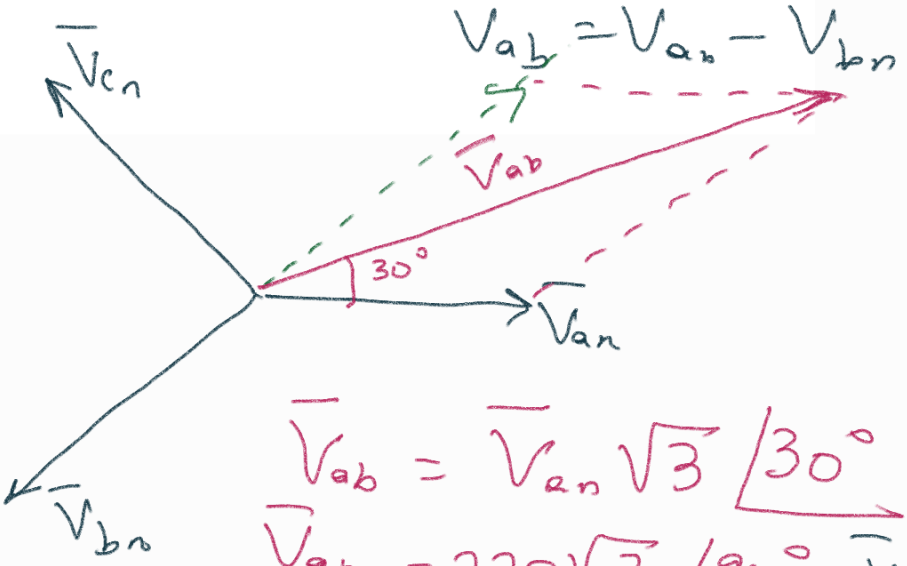

$\bar{V}_{ab} = \bar{V}_{an}\sqrt{3}\angle 30^\circ$

$\bar{V}_{ab} = 220\sqrt{3}\angle 90^\circ = \bar{V}_{AB}$

$\bar{V}_{AB} = 220\sqrt{3}\angle 90^\circ \longrightarrow \bar{I}_{AB} = \dfrac{220\sqrt{3}\angle 90^\circ}{15\angle 37^\circ} = 25.4\angle 53^\circ\ A$

$\bar{V}_{BC} = 220\sqrt{3}\angle -30^\circ \longrightarrow \bar{I}_{BC} = 25.4\angle -67^\circ\ A$

$\bar{V}_{CA} = 220\sqrt{3}\angle -150^\circ \longrightarrow \bar{I}_{CA} = 25.4\angle -187^\circ\ A$

$= 25.4\angle +173^\circ\ A$

12.30 In Fig. 12.56, the rms value of the line voltage is 208 V. Find the average power delivered to the load.

$V_L = 208\ V_{rms}$ $\quad I_L = ?$ $\quad \bar{I}_L = \dfrac{\bar{V}_{AN}}{30\angle 45^\circ}$

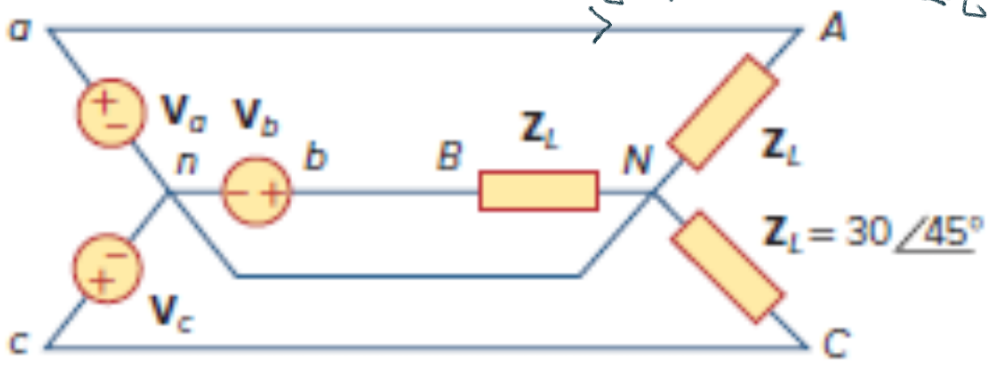

Figure 12.56
For Prob. 12.30.

Dengeli bir sistemde güç:

* Anlık güç sabittir (salınım yapmaz)

Hem Δ, hem de Y bağlı yük için

$$P = \sqrt{3}\, V_L I_L \cos\theta$$

→ 3 fazın toplam,
→ yük empedans açısı
→ yükteki hat akımın büyüklüğü
→ yükteki hat geriliminin büyüklüğü

$$Q = \sqrt{3}\, V_L I_L \sin\theta$$

$$\bar{S} = P + jQ \qquad S = \sqrt{P^2 + Q^2}$$

$$\bar{V}_{AN} = \frac{\bar{V}_{AB}}{\sqrt{3}}\angle -30^\circ = \frac{208}{\sqrt{3}}\angle -30^\circ$$

$$\bar{I}_L = \frac{\bar{V}_{AN}}{30\angle 45^\circ} = \frac{208}{30\sqrt{3}}\angle -75^\circ$$

$$I_L = \frac{208}{30\sqrt{3}}$$

$$P = \cancel{\sqrt{3}} \times 208 \times \frac{208}{30\cancel{\sqrt{3}}}\cos(45^\circ) = 1442\cos(45^\circ)$$

$$= 1000\ \text{Watt}$$

12.36 A 4200-V, three-phase transmission line has an impedance of $4 + j\,\Omega$ per phase. If it supplies a load of 1 MVA at 0.75 power factor (lagging), find:

görünen

(a) the complex power

(b) the power loss in the line

(c) the voltage at the sending end

$|V_{AB}| = 4200\,V = |V_{BC}| = |V_{CA}|$

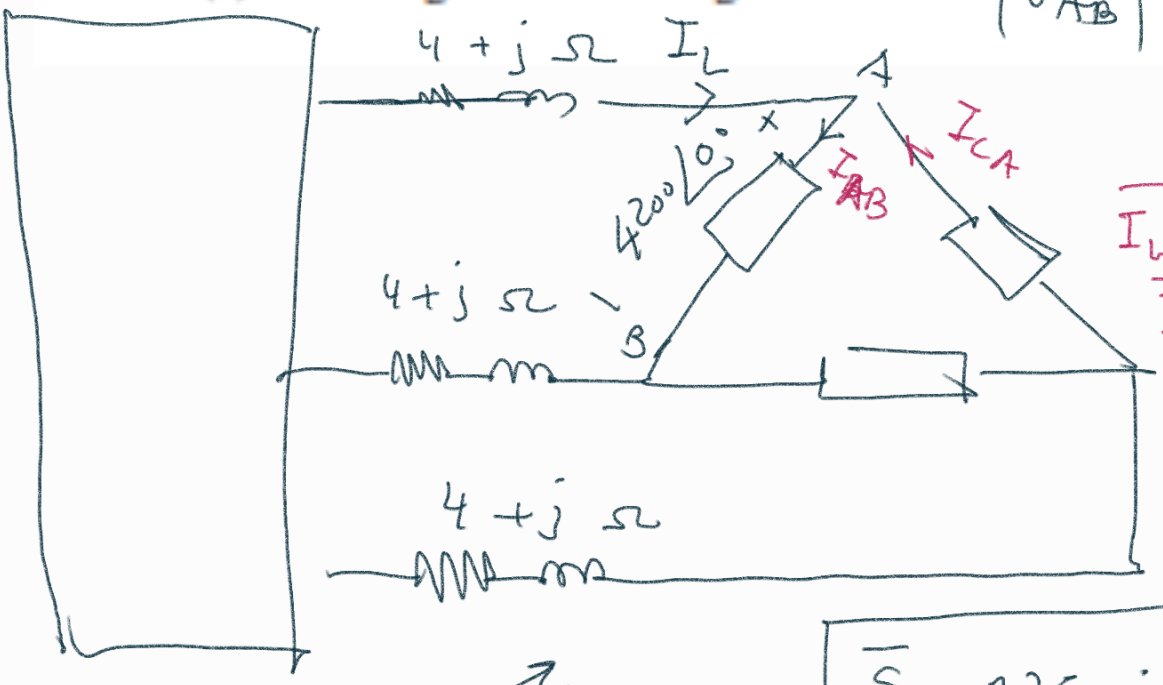

$\bar{I}_L + \bar{I}_{CA} = \bar{I}_{AB}$

$\bar{I}_L = \bar{I}_{AB} - \bar{I}_{CA}$

$$\boxed{\bar{S} = 0.75 + j0.66\ MVA}$$

a)

b) I_L'ye ihtiyacım var.

$P_{line} = 3 \times 4 \times |I_L|^2$

$P = \cancel{0.75} \times 10^6\ W = \sqrt{3} \times 4200 \times I_L \times \overset{\cos\theta}{\cancel{0.75}}$

$I_L = \dfrac{10^6}{4200\sqrt{3}} \cong 137.5\,A_{rms}$

$P_{line} = 3 \times 4 \times 137.46^2 = 226.7\ KW$

kayıp

c) $\bar{V}_{ab} = (4+j)\bar{I}_L + \bar{V}_{AB}$

$\bar{V}_{AB} \to 4200\angle 0°$

$$\bar{S}_\phi = 0.25 + j0.22 \text{ MVA} = 4200\angle 0^\circ \cdot \bar{I}_{AB}^{*}$$

yükteki faz akımı $\rightarrow \bar{I}_{AB} = \dfrac{(0.25 - j0.22)\times \cancel{10^6}\,1000}{\cancel{4200}\,4000} = 59.5 - j52.4$ A

hat akımı $\bar{I}_L = \bar{I}_{AB}\sqrt{3}\angle -30^\circ \Rightarrow \bar{V}_{ab} = 4200\angle 0^\circ + (4+j)\bar{I}_L$

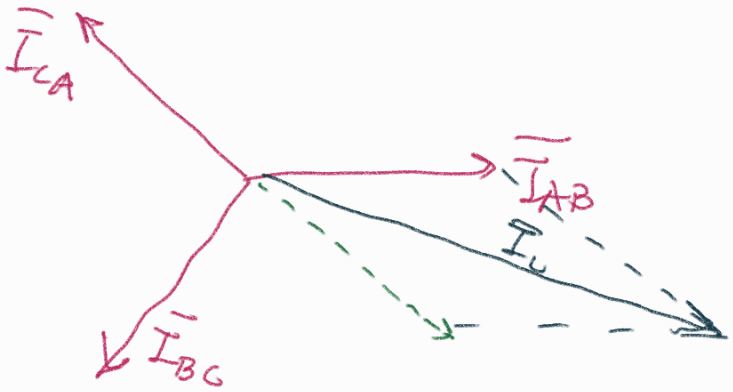

12.39 Find the real power absorbed by the load in Fig. 12.58.

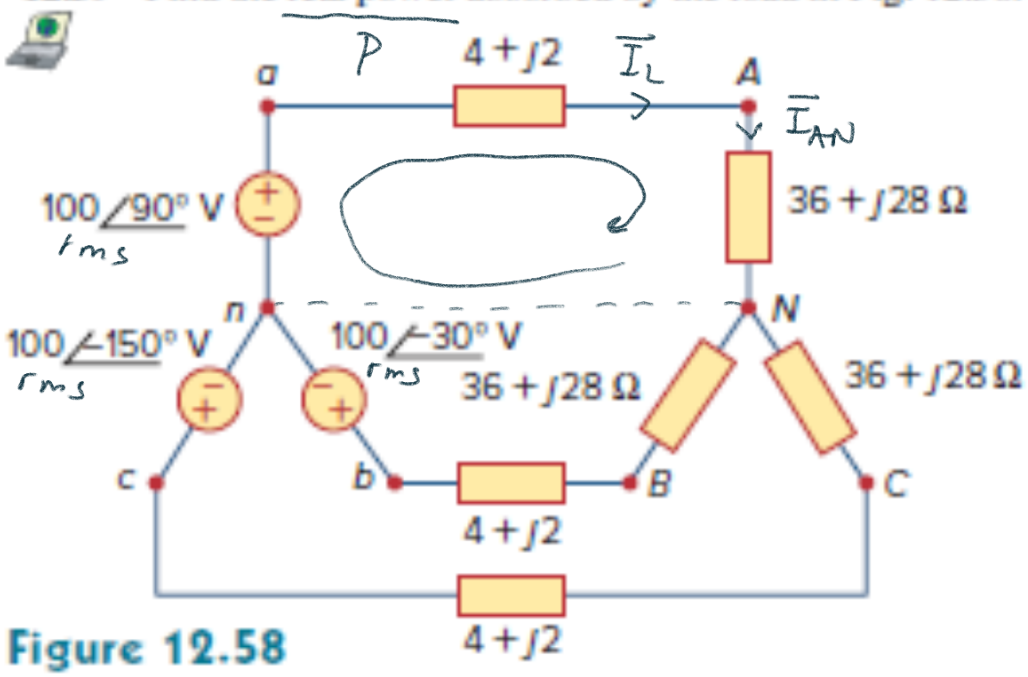

Figure 12.58
For Prob. 12.39.

$$100\angle 90^\circ = \bar{I}_{AN}(4+j2 + 36+j28)$$

$$\bar{I}_{AN} = \frac{100\angle 90^\circ}{40+j30^\circ} = 2\angle 53^\circ \text{ A}$$

$$P_A = |I_{AN}|^2 \times 36 = 2^2 \times 36 = 144\text{W} \Rightarrow P = 3P_A = 432 \text{ W}$$

V_{AN} : Yükteki faz gerilimi : $\bar{I}_{AN} \times (36 + j28)$

Yükteki hat gerilimi: $\bar{V}_{AB} = \bar{V}_{AN}\sqrt{3} \angle 30^\circ$

Kaynaktaki faz gerilimi : $V_{an} = 100 \angle 90^\circ$ V

" hat gerilimi: $\bar{V}_{ab} = \bar{V}_{an}\sqrt{3} \angle 30^\circ$

12.47 The following three parallel-connected three-phase loads are fed by a balanced three-phase source:

Load 1: 250 kVA, 0.8 pf lagging

Load 2: 300 kVA, 0.95 pf leading

Load 3: 450 kVA, unity pf

If the line voltage is 13.8 kV, calculate the line current and the power factor of the source. Assume that the line impedance is zero.

V_L I_L

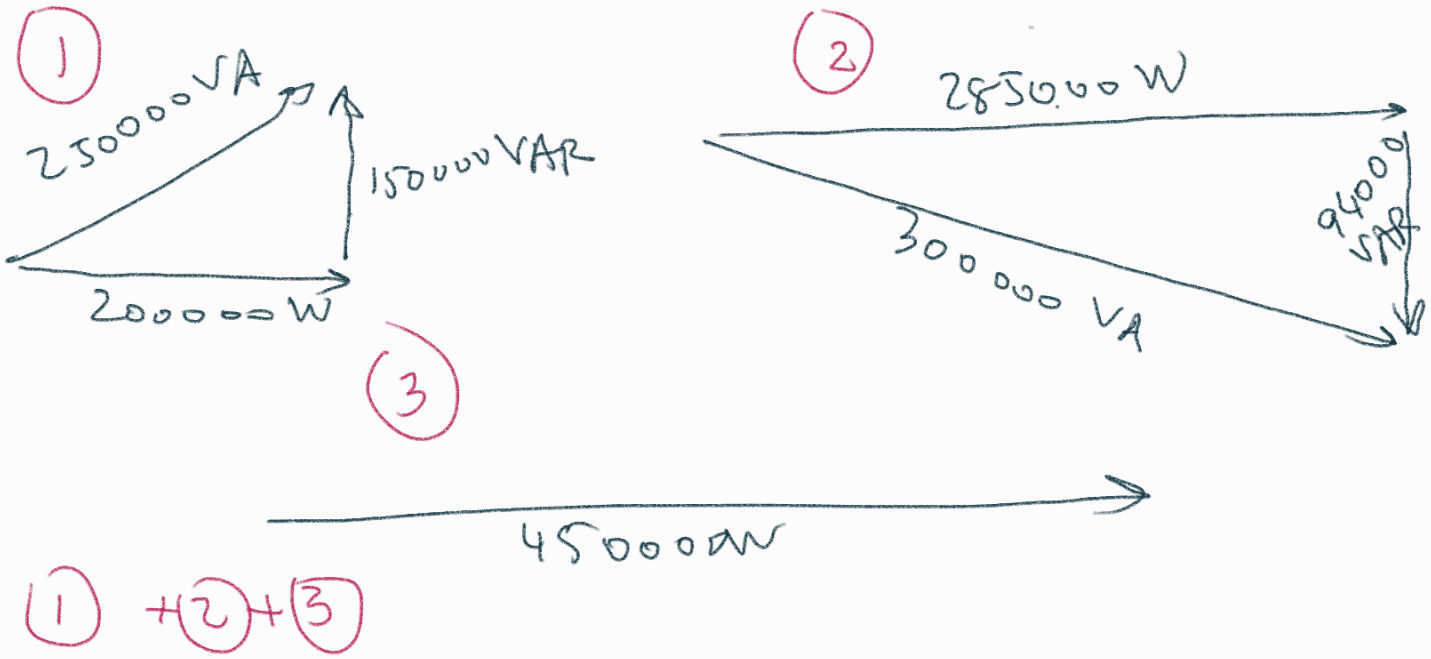

1 + 2 + 3

$S_{eq} = 935000 + j56000 \text{ VA}$

$= \sqrt{3} V_L I_L \cos\theta + \sqrt{3} j V_L I_L \sin\theta$

$\theta = \tan^{-1}\left(\frac{56}{935}\right) \cong 3.43^\circ$

p.f. $= \cos\theta = 0.998$ lagging

$935000 = \sqrt{3}\, 13800 \times I_L \times 0.998$

$I_L \cong 39.2$ A (hat akım büyüklüğü)

12.55 A three-phase supply, with the line-to-line voltage of 240 V rms, has the unbalanced load as shown in Fig. 12.62. Find the line currents and the total complex power delivered to the load.

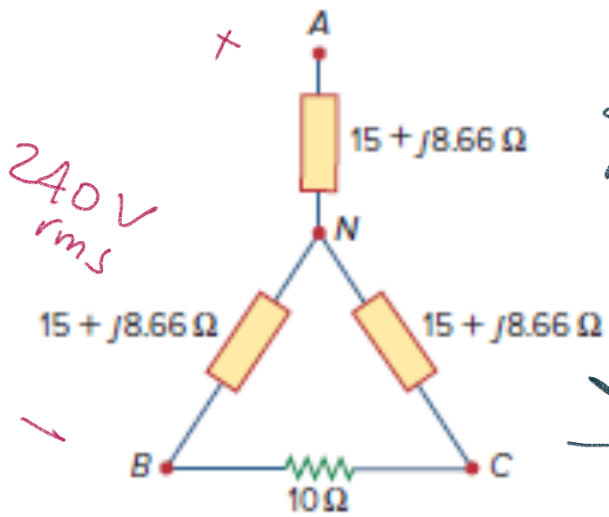

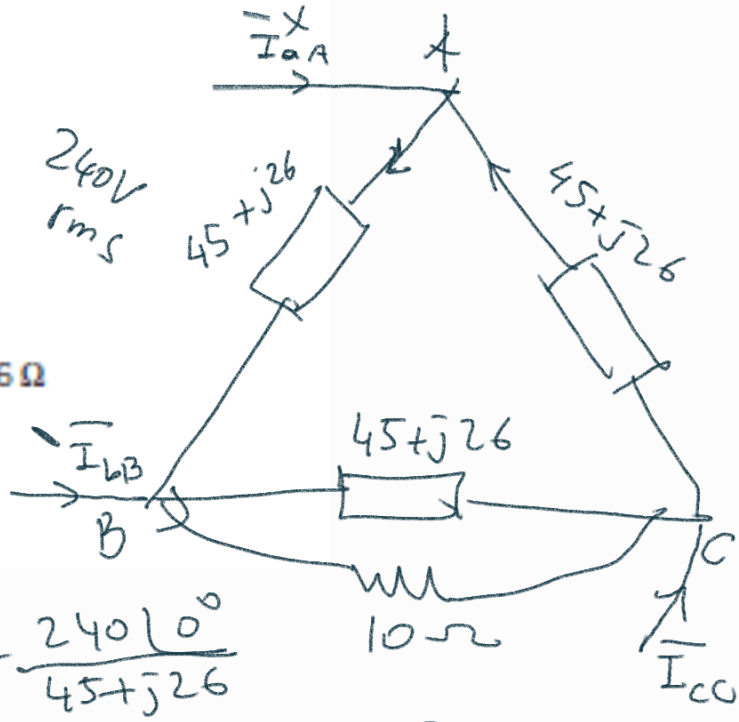

$V_{AB} = 240\angle 0^\circ \rightarrow I_{AB} = \frac{240\angle 0^\circ}{45+j26}$

$V_{BC} = 240\angle -120^\circ \rightarrow I_{BC} = \frac{240\angle -120^\circ}{(45+j26)//10}$

$V_{CA} = 240\angle +120^\circ \rightarrow I_{CA} = \frac{240\angle +120}{45+j26}$

$\bar{I}_{AB} - \bar{I}_{CA} = \bar{I}_{aA} \rightarrow$ Line current a

$\bar{I}_{BC} - \bar{I}_{AB} = \bar{I}_{bB} \rightarrow$ " " b

$\bar{I}_{CA} - \bar{I}_{BC} = I_{cC} \rightarrow$ " " c

12.80 A balanced three-phase source furnishes power to the following three loads:

Load 1: 6 kVA at 0.83 pf lagging

Load 2: unknown

Load 3: 8 kW at 0.7071 pf leading

If the line current is 84.6 A rms, the line voltage at the load is 208 V rms, and the combined load has a 0.8 pf lagging, determine the unknown load.

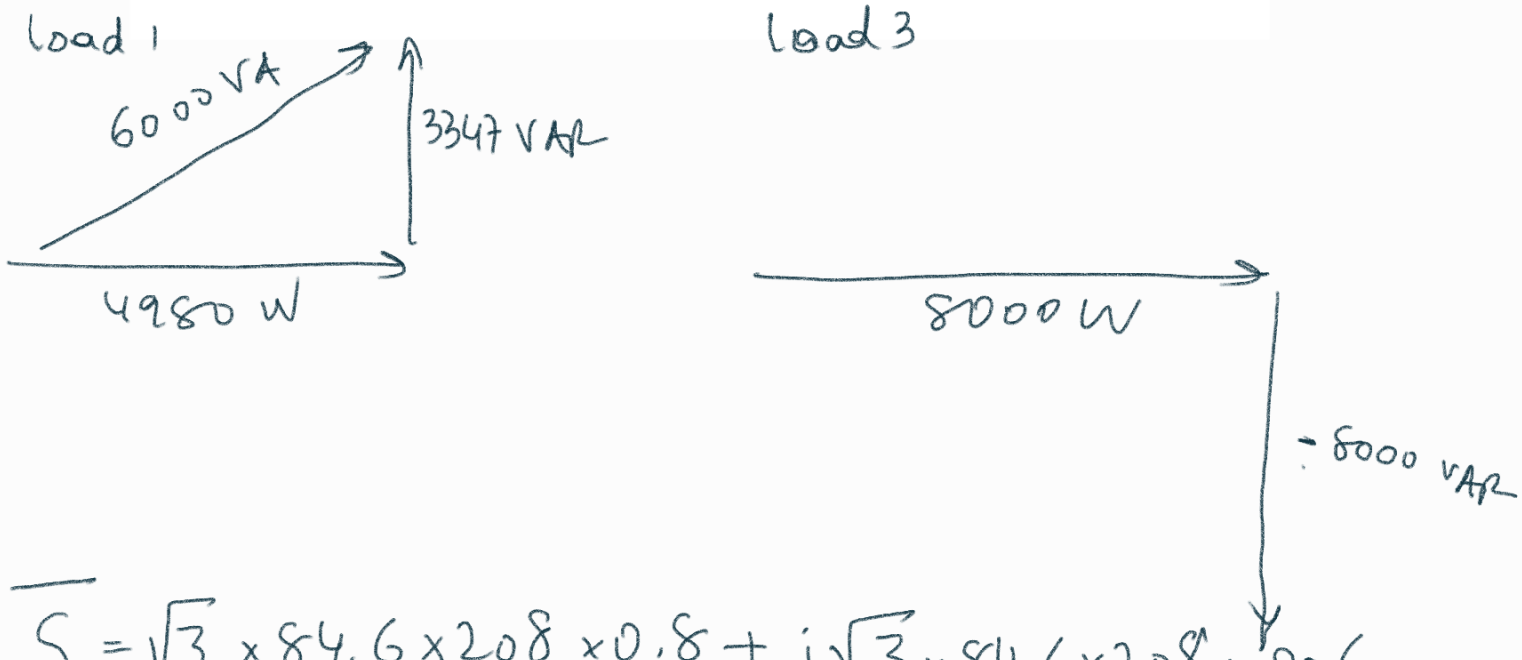

$$\bar{S}_{eff} = \sqrt{3} \times 84.6 \times 208 \times 0.8 + j\sqrt{3} \times 84.6 \times 208 \times 0.6$$
$$= 24383 + j18287 \text{ VA}$$

$$4980 + 8000 + P_2 = 24383 \Rightarrow P_2 = 11403 \text{ W}$$

$$3347 - 8000 + Q_2 = 18287 \Rightarrow Q_2 = 22940 \text{ VAR}$$

$$\bar{S}_2 = 11403 + j22940 \text{ VA}$$

11.35 A three-phase line has an impedance of $0.1 + j0.8\ \Omega/\phi$. The line feeds two balanced three-phase loads connected in parallel. The first load is absorbing a total of 630 kW and absorbing 840 kVAR magnetizing vars. The second load is Y-connected and has an impedance of $15.36 - j4.48\ \Omega/\phi$. The line-to-neutral voltage at the load end of the line is 4000 V. What is the magnitude of the line voltage at the source end of the line?

Load 1

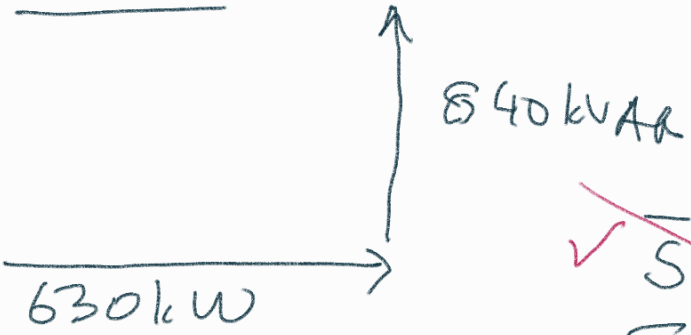

$$\cancel{\bar{S}_1 = 630000 + j840000 \text{ VA}}$$

$$\cancel{= \sqrt{3}\, V_L I_L \cos\theta + j\sqrt{3}\, V_L I_L \sin\theta}$$

$4000\sqrt{3}$ $\quad$ $4000\sqrt{3}$

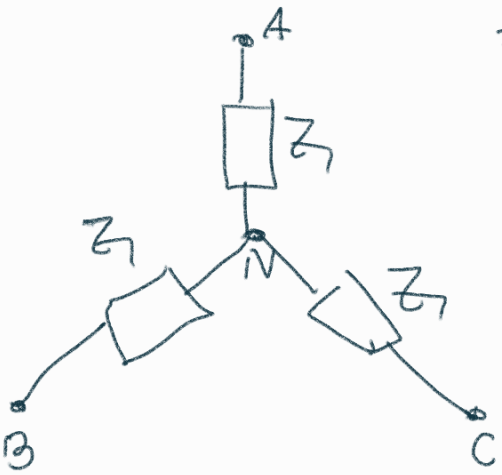

$$\boxed{\bar{V}_{AN} = 4000\angle 0^\circ}$$

$$3 \times \frac{4000^2}{Z_1^*} = 630000 + j840000$$

$$\boxed{\frac{3 \times (4000)^2}{630000 - j840000} = Z_1}$$

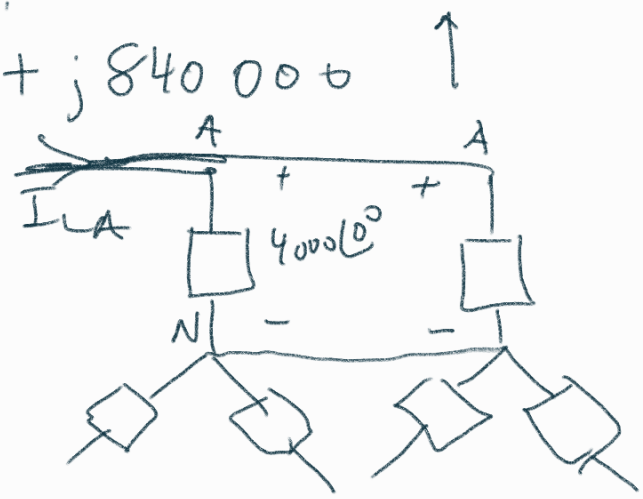

$$Z_2 = 15.36 - j4.48$$

$$\bar{I}_{LA} = \frac{4000\angle 0^\circ}{(Z_1)} + \frac{4000\angle 0^\circ}{Z_2}$$

$$\bar{V}_{an} = (0.1 + j0.8)\,\bar{I}_L + \underbrace{4000\angle 0^\circ}_{V_{AN}}$$

$$\bar{V}_{ab} = \sqrt{3}\,\bar{V}_{an}\angle 30^\circ$$

$|V_{ab}|$ bulunur $\Rightarrow \sqrt{3}\,|\bar{V}_{an}|$

11.37 The output of the balanced positive-sequence three-phase source in Fig. P11.37 is 41.6 kVA at a lagging power factor of 0.707. The line voltage at the source is 240 V.

a) Find the magnitude of the line voltage at the load.

b) Find the total complex power at the terminals of the load.

Figure P11.37

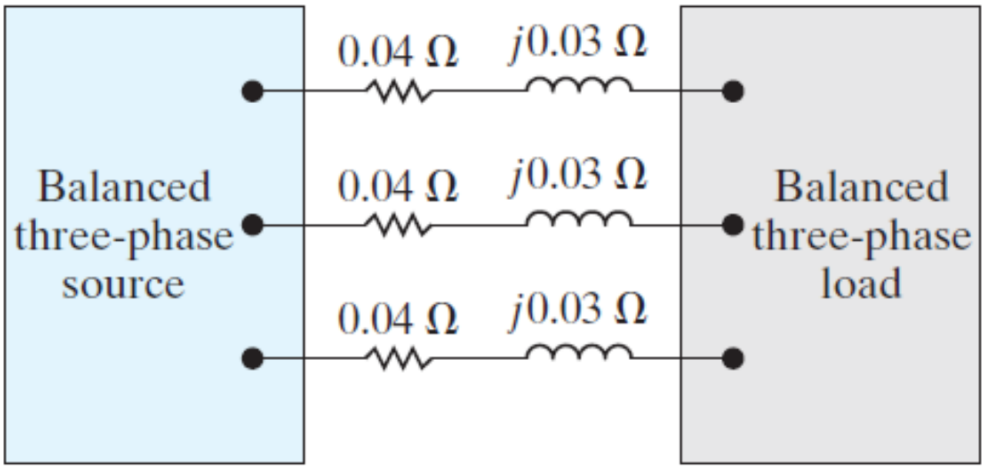

12.81 A professional center is supplied by a balanced three-phase source. The center has four balanced three-phase loads as follows:

Load 1: 150 kVA at 0.8 pf leading

Load 2: 100 kW at unity pf

Load 3: 200 kVA at 0.6 pf lagging

Load 4: 80 kW and 95 kVAR (inductive)

If the line impedance is $0.02 + j0.05\ \Omega$ per phase and the line voltage at the loads is 480 V, find the magnitude of the line voltage at the source.

CHAPTER 13: MANYETİK BAĞLAŞIMLI DEVRELER (Coupled)

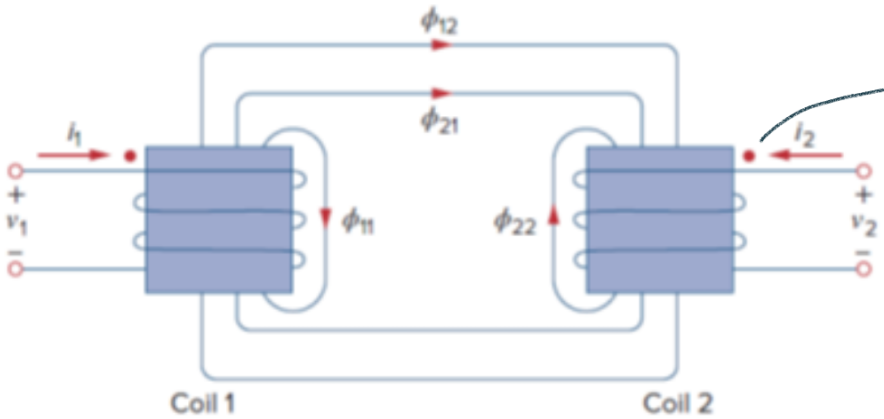

nokta kuralı

Figure 13.4
Illustration of the dot convention.

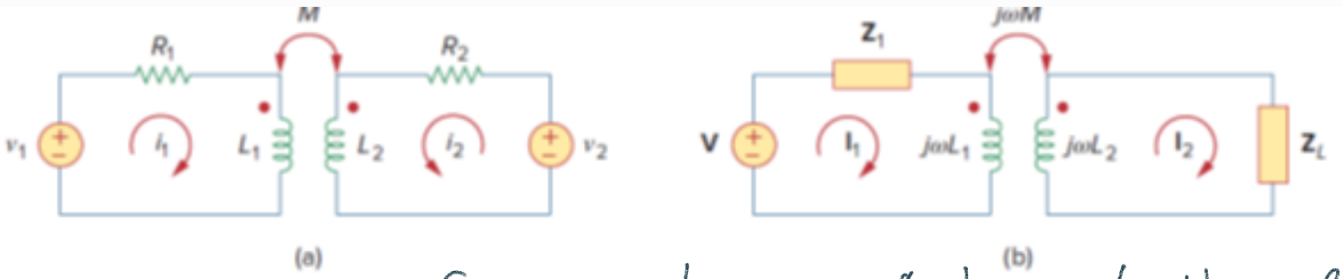

Çevre akım yöntemi kullanılır

Figure 13.7
Time-domain analysis of a circuit containing coupled coils (a) and frequency-domain analysis of a circuit containing coupled coils (b).

ELE 201 : $w = \frac{1}{2} L i_{L_1}^2$ t anında

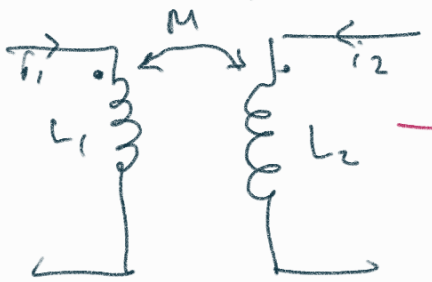

$\rightarrow w \quad \frac{1}{2} L_1 i_1^2 + \frac{1}{2} L_2 i_2^2 + M i_1 i_2$

$M = k\sqrt{L_1 L_2}$

k → manyetik bağlaşım katsayısı

$0 \leq k \leq 1$

$k \simeq 1$: sıkı bağlaşım (gelişi)

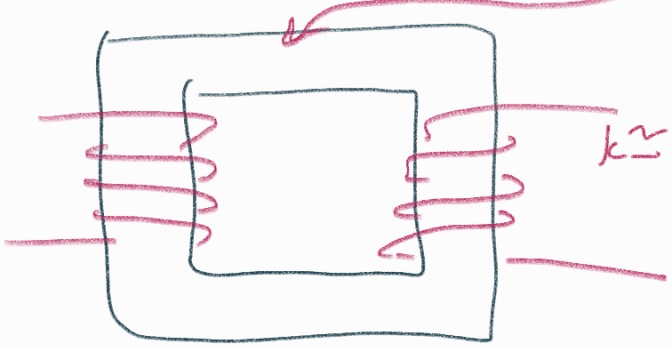

$k \simeq 1 \Rightarrow$ ideal trafolar

$k \ll 1$ doğrusal trafo

KAYNAK TRAFO

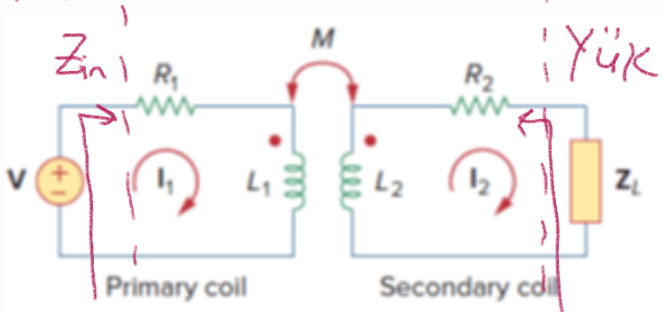

Figure 13.19
A linear transformer.

$$Z_{in} = R_1 + j\omega L_1 + Z_{reflected}$$

$$= R_1 + j\omega L_1 + \frac{\omega^2 M^2}{j\omega L_2 + R_2 + Z_L}$$

$$Z_{Th} = j\omega L_2 + R_2 + \frac{\omega^2 M^2}{j\omega L_1 + R_1}$$

13.4 (a) For the coupled coils in Fig. 13.74(a), show that

$$L_{eq} = L_1 + L_2 + 2M$$

(b) For the coupled coils in Fig. 13.74(b), show that

$$L_{eq} = \frac{L_1 L_2 - M^2}{L_1 + L_2 - 2M}$$

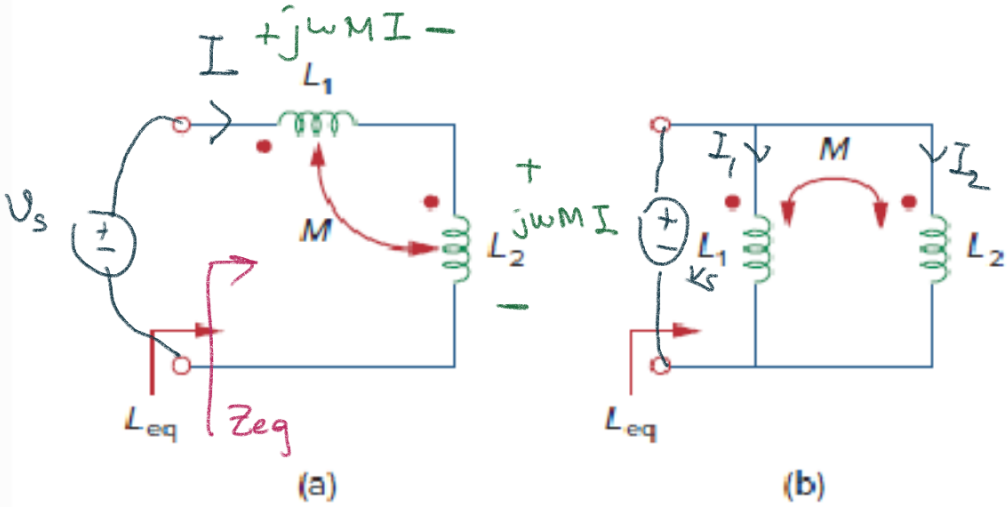

Figure 13.74
For Prob. 13.4.

a)

$$V_s = j\omega L_1 I + j\omega L_2 I + j\omega M I + j\omega M I$$

$$V_s = I\, j\omega (L_1 + L_2 + 2M)$$

$$Z_{eq} = \frac{V_s}{I} = j\omega \underbrace{(L_1 + L_2 + 2M)}_{L_{eq}}$$

b) $j\omega L_1 I_1 + j\omega M I_2 = j\omega L_2 I_2 + j\omega M I_1$

$$j\omega(L_1 I_1 + M I_2) = (L_2 I_2 + M I_1) = V_s$$

$$Z_{eq} = \frac{V_s}{I_1 + I_2}$$

$$Z_{eq} = \frac{(L_1 I_1 + M I_2) j\omega}{I_1 + I_2}$$

$$(L_1 - M) I_1 = (L_2 - M) I_2$$

$$\boxed{I_2 = \frac{L_1 - M}{L_2 - M} I_1}$$

$$= \frac{j\omega \left(L_1 \cancel{I_1} + M \frac{L_1 - M}{L_2 - M} \cancel{I_1} \right)}{\cancel{I_1} + \frac{L_1 - M}{L_2 - M} \cancel{I_1}} = \frac{L_1 + M \frac{L_1 - M}{L_2 - M}}{1 + \frac{L_1 - M}{L_2 - M}} j\omega$$

$$= \frac{(L_1 L_2 - \cancel{L_1 M} + \cancel{L_1 M} - M^2) j\omega}{L_2 - M + L_1 - M}$$

$$Z_{eq} = \frac{L_1 L_2 - M^2}{L_1 + L_2 - 2M} j\omega$$

13.9 Find $\mathbf{V}_x$ in the network shown in Fig. 13.78.

ML

$$\boxed{V_x = 2 I_2}$$

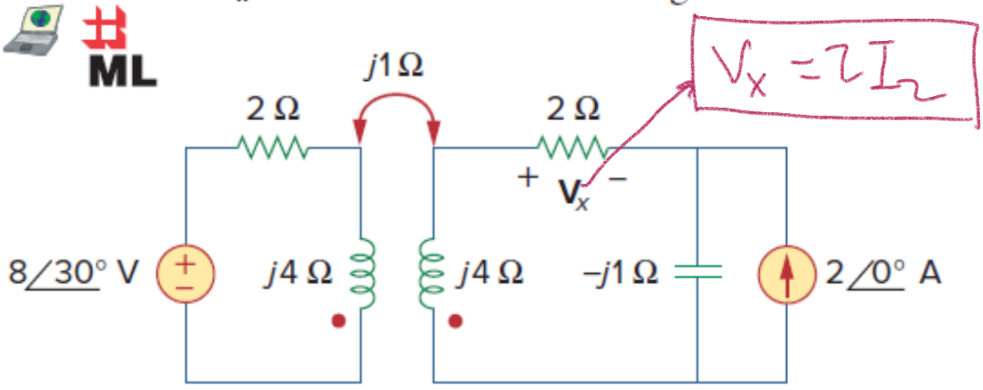

Figure 13.78
For Prob. 13.9.

Kaynak dön.

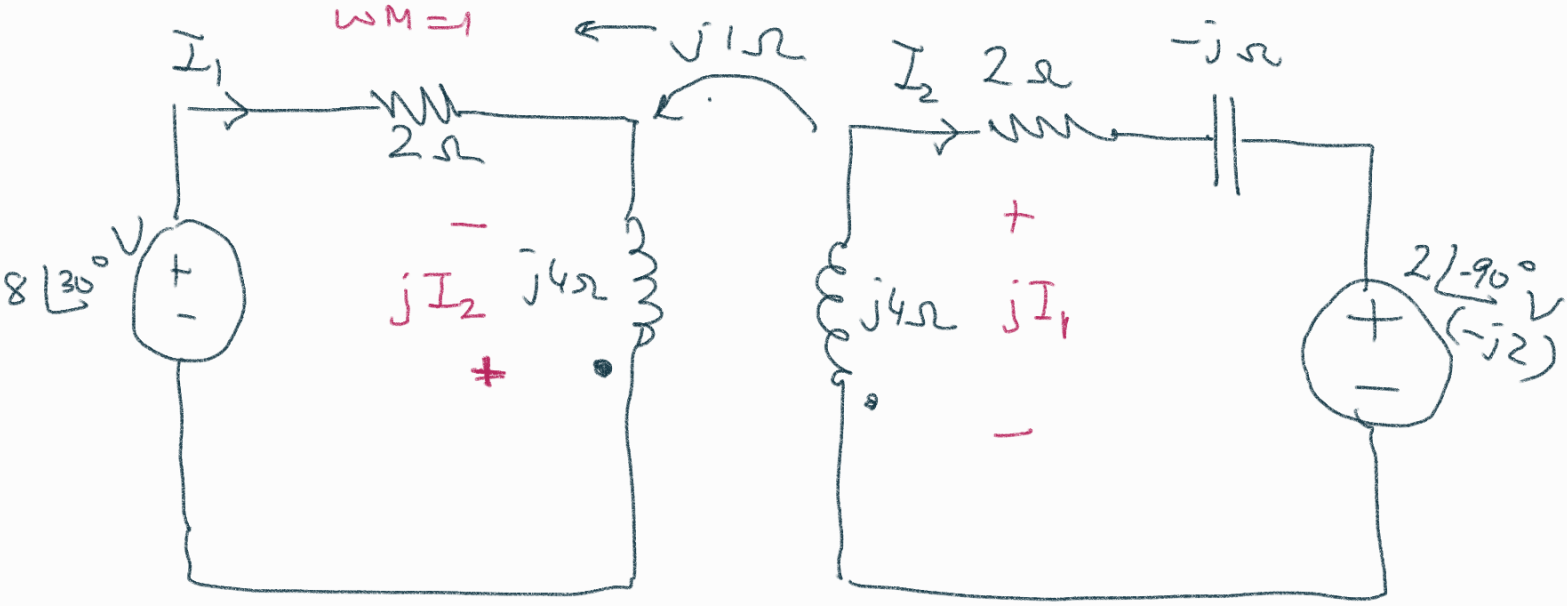

$$8\angle 30^\circ = 2I_1 + j4I_1 - jI_2 \quad (1)$$

$$j4I_2 + 2I_2 - jI_2 - j2 - jI_1 = 0 \quad (2)$$

$$\left((2+j4)I_1 - jI_2 = 8\angle 30^\circ\right) \times j$$

$$+\left(-jI_1 + (2+j3)I_2 = 2\angle 90^\circ\right) \times (2+j4)$$

$$I_2 + (2+j3)(2+j4)\,I_2 = 8\angle 120^\circ + 2j(2+j4)$$

$$I_2\left(1+4+j8+j6-12\right) = 8\angle 120^\circ + 4j - 8$$

$$I_2 = \frac{8\angle 120^\circ + 4j - 8}{-7+j14}$$

$$V_x = 2I_2 = \frac{16\angle 120^\circ + 8j - 16}{-7+j14} = \frac{-8+j13.86+8j-16}{-7+j14}$$

$$= \frac{-24+j21.86}{-7+j14}$$

$$V_x = \frac{24-j21.86}{7-j14} = \frac{32.46\angle -42.3}{7\sqrt{5}\angle -64}$$

$$= 2.07\angle 21.7^\circ \checkmark$$

13.12 Determine the equivalent L_{eq} in the circuit of Fig. 13.81.

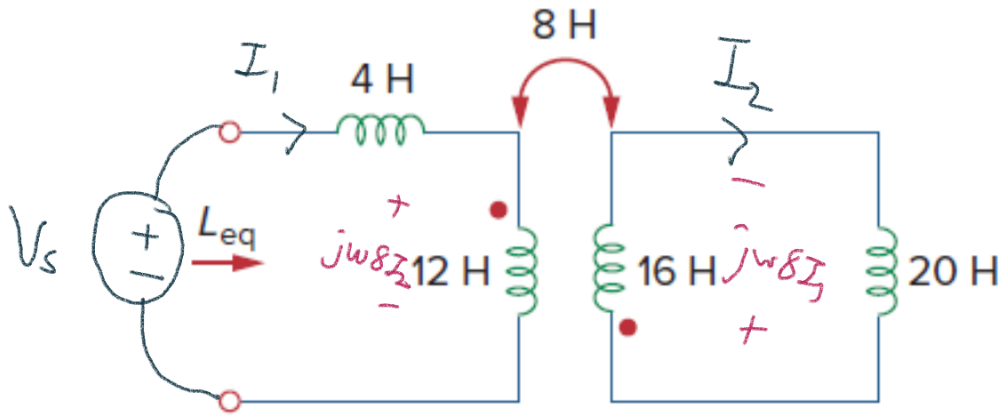

Figure 13.81
For Prob. 13.12.

(1) $V_s = j\omega 4 I_1 + j\omega 12 I_1 + j\omega 8 I_2$

(2) $j\omega 20 I_2 + j\omega 16 I_2 + j\omega 8 I_1 = 0$

$\cancel{j\omega} 36 I_2 = -\cancel{j\omega} 8 I_1$

$\boxed{9 I_2 = -2 I_1} \longrightarrow \boxed{I_2 = -\frac{2}{9} I_1}$

(1) $V_s = j\omega 4 I_1 + j\omega 12 I_1 - j\omega 8 \times \frac{2}{9} I_1$

$$\frac{V_s}{I_1} = Z_{eq} = j\omega \underbrace{\left(4 + 12 - \frac{16}{9}\right)}_{L_{eq} = 16 - \frac{16}{9} = \frac{128}{9}\ H}$$

13.16 Obtain the Norton equivalent at terminals *a-b* of the circuit in Fig. 13.85.

ML

$\omega M = 1$ $\qquad I_N : I_{kd}$

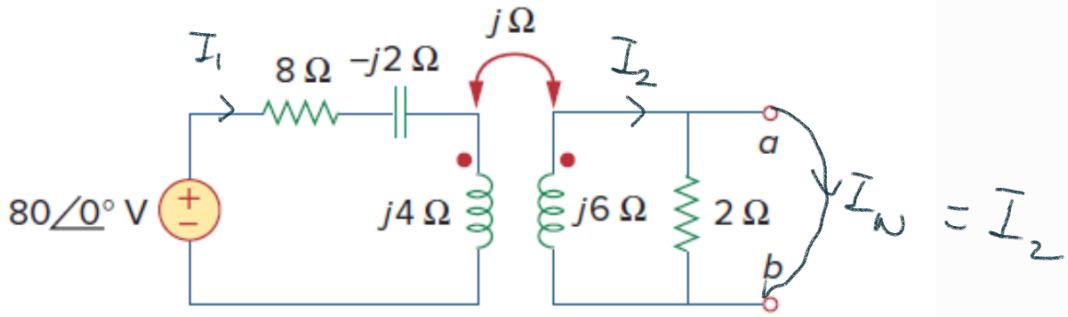

Figure 13.85
For Prob. 13.16.

(1) $80 = (8-j2)I_1 + j4I_1 - jI_2$

(2) $j6I_2 - jI_1 = 0 \Rightarrow \boxed{6I_2 = I_1}$

(1) $80 = (8-j2)6I_2 + j24I_2 - jI_2$

$$I_2 = \boxed{\frac{80}{48+j11} = I_N}$$

$Z_{Th}: (Z_r + j6) // 2$

$$Z_r = \frac{(\omega M)^2}{8+j2} = \frac{1}{8+j2}$$

$$\boxed{Z_{Th} = \left(\frac{1}{8+j2} + j6\right) // 2}$$

$$Z_{Th} = \frac{-12+j48}{8+j2} // 2$$

$k = \frac{1}{2\sqrt{2}}$

13.24 In the circuit of Fig. 13.93,

ML

(a) find the coupling coefficient,

(b) calculate v_o,

(c) determine the energy stored in the coupled inductors at $t = 2$ s.

$M = k\sqrt{L_1 L_2} \Rightarrow 1 = k\sqrt{4 \times 2}$

$w = \frac{1}{2} 4\, i_1(2)^2 + \frac{1}{2} 2\, i_2(2)^2 + 1 \times i_1(2)\, i_2(2)$

$\omega = 4$

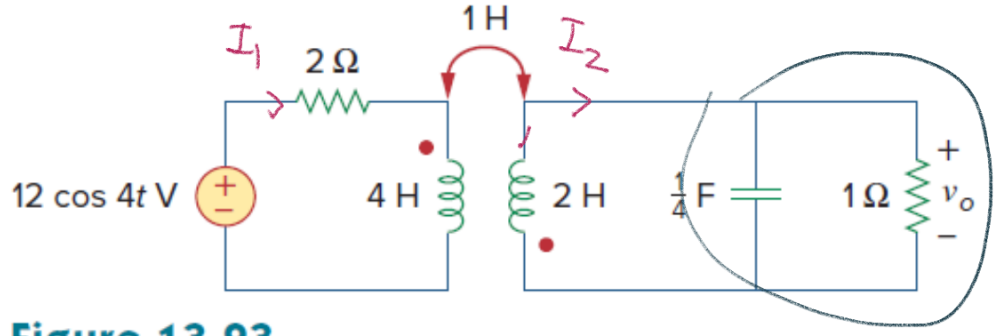

$\frac{1}{j\frac{1}{4}4} = -j$

Figure 13.93
For Prob. 13.24.

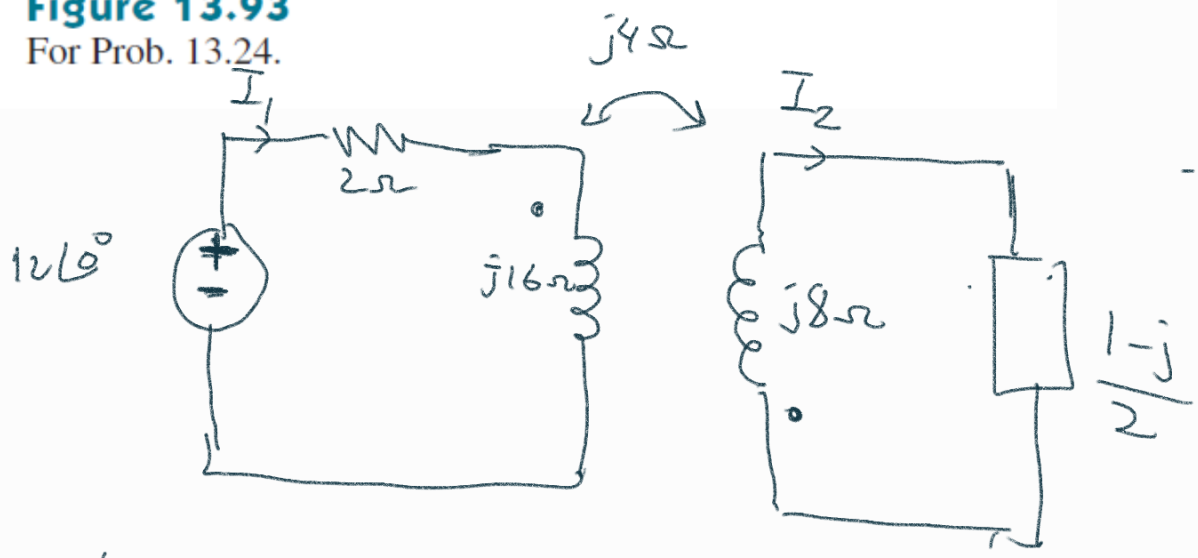

(1) $12 = (2 + j16) I_1 + j4 I_2$

(2) $j8 I_2 + \frac{1-j}{2} I_2 + j4 I_1 = 0$

$$\boxed{\frac{1+j15}{2} I_2 = -j4 I_1}$$

$$\boxed{I_1 = \frac{1+j15}{-j8} I_2}$$

$$12 = \left[(2+j16)\frac{(1+j15)}{-j8} + j4\right] I_2$$

$$12 = \frac{2 + j30 + j16 - 240 + 32}{-j8} I_2$$

$$\boxed{\frac{-j96}{-206+j46} = I_2} = \frac{96\angle -90^\circ}{211\angle 180^\circ - 12.6^\circ}$$

$$= 0.45\angle -257.4^\circ \text{ A}$$

$$\boxed{i_2(t) = 0.45\cos(4t - 257.4^\circ)\text{A}}$$

$$I_1 = \frac{1+j15}{-j8} I_2 = -\frac{15}{8} I_2 = -0.84\cos(4t - 257.4^\circ)$$

$$\boxed{I_1 = 0.84\cos(\underbrace{4t}_{8\text{rad}} - 77.4^\circ)\text{ A}}$$

$t = 2$ sn'de:

$$i_2(2) = 0.45\cos\left(8\times\frac{180}{\pi} - 257.4^\circ\right) = -0.45\times 0.93 = -0.42$$

$$i_1(2) = 0.84\cos\left(8\times\frac{180}{\pi} - 77.4^\circ\right) = 0.93\times 0.84 = 0.78$$

$$w = \frac{1}{2}\cdot 4\cdot 0.78^2 + \frac{1}{2}\cdot 2\cdot 0.42^2 - 1\times 0.42\times 0.78$$

***13.28** In the circuit of Fig. 13.97, find the value of X that will give maximum power transfer to the 20-Ω load.

ML

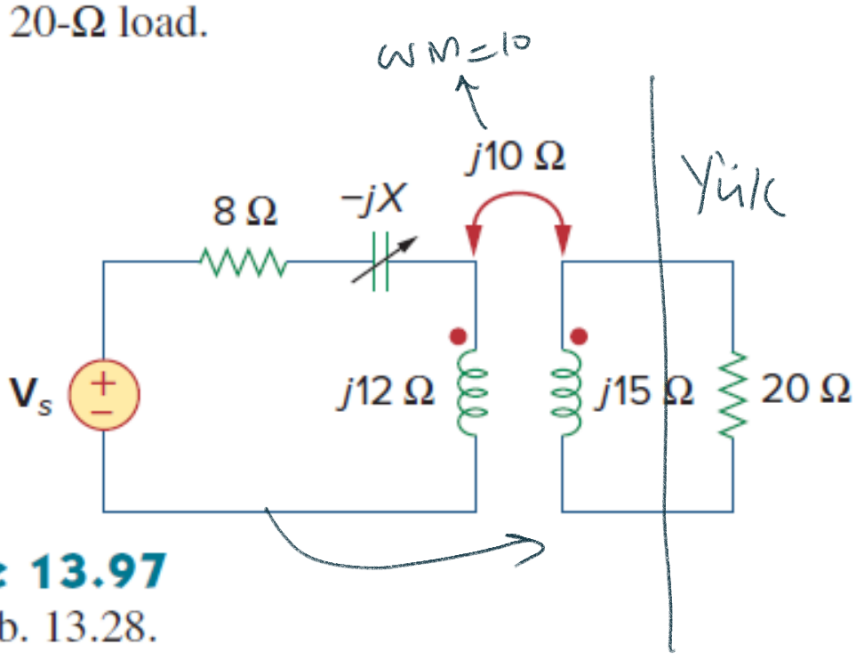

Figure 13.97
For Prob. 13.28.

maks güç aktarımı için $20 = |Z_{Th}|$ olmalı

$$Z_{Th} = j15 + \frac{100}{8 - jX + j12}$$

$$= \frac{j120 + 15X - 180 + 100}{8 + j(12 - X)} = \frac{(15X - 80) + j120}{8 + j(12 - X)}$$

$$\frac{(15X - 80)^2 + 120^2}{64 + (12 - X)^2} = 400$$

$$\frac{225X^2 - 2400 + 6400 + 14400}{64 + 144 - 24X + X^2} = 400$$

$$225X^2 + 18400 = 25600 + 57600 - 9600X + 400X^2$$

$$0 = 175X^2 - 9600X + 64800$$

$$X_{1,2} = \frac{9600 \mp \sqrt{9600^2 - 4 \cdot 175 \cdot 64800}}{350}$$

$$X_{1,2} = \frac{9600 \mp 6841}{350} = (47\ ?,\ 7.9\ ?)$$

13.33 Determine the input impedance of the air-core transformer circuit of Fig. 13.102.

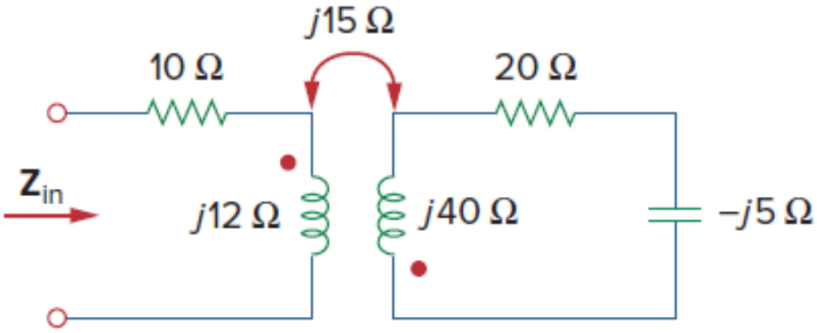

Figure 13.102
For Prob. 13.33.

$$Z_{in} = 10 + j12 + \frac{225}{20 + j35}$$

$$= \frac{200 + j350 + j240 - 420 + 225}{20 + j35}$$

$$= \frac{5 + j590}{20 + j35} = \frac{1 + j118}{4 + j7} \cong \frac{118\angle 90^\circ}{\sqrt{65}\angle 60^\circ}$$

$$\cong 14.8\angle 30^\circ$$

$$= 8 + j7.4\ \Omega$$

13.39 A 1,200/240-V rms transformer has impedance $60\angle -30^\circ\ \Omega$ on the high-voltage side. If the transformer is connected to a $0.8\angle 10^\circ$-Ω load on the low-voltage side, determine the primary and secondary currents when the transformer is connected to 1,200 V rms.